CORPOELEC EMPRESA ELÉCTRICA SOCIALISTA	**AMPLIACIÓN DE LA CAPACIDAD DE GENERACIÓN Y TRANSPORTE DE ELECTRICIDAD EN LA ISLA DE MARGARITA (AGM)**	LOGO CONTRATISTA
SUBPROYECTO		

MEMORIA DE CÁLCULOS – DISCIPLINAS MECÁNICA Y PROCESOS

AGM-02-0204-CAL-M-0001

CORPOELEC EMPRESA ELÉCTRICA SOCIALISTA	**AMPLIACIÓN DE LA CAPACIDAD DE GENERACIÓN Y TRANSPORTE DE ELECTRICIDAD EN LA ISLA DE MARGARITA (AGM)**	LOGO CONTRATISTA
SUBPROYECTO		

Rev.	Fecha	Breve Descripción del Cambio	Total Pág.	Elab. por CONTRATISTA	Rev. por CONTRATISTA	Aprob. Por CORPOELEC
0	7/19/2011	EMISIÓN FINAL	31	TK	CB	XX
A	dd/mm/aaaa	EMISIÓN PARA COMENTARIOS DE EDC	31	TK	CB	XX

CONTENIDO

1. PURPOSE

The purpose of this document is to present results, criteria, calculations, assumptioms, functional requirements and technical methodology used in arriving at the design for Dual Fuel Modification Package.

2. SCOPE

The scope of this document is to present all results obtained from mechanical and process calculation through proper development for design solutions related to systems, equipment package, equipment, instruments and devices required for the Dual Fuel Modification Package. To cover every aspect of the design, it will be used the same approach as described on the document AGM-02-0204-ESP-P-0004 by breakdown in three sections the engineering details to design, fabricate and install systems to support dual fuel operations. The Dual Modification Package can be broken out into three sections:

- Existing System on turbine that require modification.
- New systems that will be added to the turbine.
- Additional balance of plant equipment that will need to be support for dual fuel operations.

3. LOCATION

La Planta de Generación Juan Bautista Arismendi estará ubicada en la zona de El Guamache, municipio Tubores (ver Figura 1 y Figura 2), al lado oeste de la planta de Distribución de combustible El Guamache de PDVSA.

Figura 1. Ubicación de la Nueva Planta de Generación Juan Bautista Arismendi

Fig. 2. Parcela de Ubicación de Nueva Planta de Generación Juan Bautista Arismendi

3.1. ÁREA Y UBICACIÓN

La parcela ocupará un área aproximada de 50 hectáreas, la cual forma un polígono de cuatro (04) lados, definidos por los siguientes puntos de coordenadas UTM - REGVEN:

Vértices de Linderos		
Punto	**Norte**	**Este**
220A	1.203.129,416	386.707,723
220B	1.203.060,674	387.201,966
221A	1.202.267,719	387.261,708
221B	1.202.232,067	386.775,330

Elevación Sobre El Nivel Del Mar (m.s.n.m.): 5 m.

4. REFERENCES

AGM-02-0204-ESP-P-0004	Design basis
AGM-02-0204-PLA-P-0009	Flow and Process Diagram
AGM-02-0204-PLA-P-0048	Liquid Fuel System PID's
AGM-0204-PLA-G-0057	Plot Plan
GER-4211	Emissions Control
AGM-0204-PLA-P-0047	Water Injection Skid PID

5. EXISTING SYSTEM ON TURBINE THAT REQUIRE MODIFICATION

To be completed

6. NEW SYSTEMS THAT WILL BE ADDED TO THE TURBINE

To be completed

7. ADDITIONAL BALANCE OF PLANT EQUIPMENT THAT WILL NEED TO BE SUPPORT FOR DUAL FUEL OPERATIONS.

7.1. MECHANICAL CALCULATIONS – LIQUID FUEL FORWARDING (P-1002 A/S, P-1003 A/S)

7.1.1. ASSUMPTIONS

- Pressure required at unit – 60psi (from AGM-02-0204-PLA-P-0048)

- Liquid Fuel Requirement at unit– 108gpm (from GER-4211)
- Total Liquid fuel pump capacity – 150gpm (from AGM-02-0204-PLA-P-0048)
- Lightoff fuel rate – 6.5gpm
- Piping, skid locations, elevations per AGM- 02-0204-PLA-G-0057 and supplied orthographic drawings
- Pump suction assumed to be flooded for sizing, as accurate NPSHA cannot be calculated from information supplied.
- Discharge losses calculated from skid losses, pipe run, and pipe fitting count only. Customer supplied valves not included.
- Design factor = 1.125

7.1.2. CALCULATION FOR TURBINE DEMAND AT FULL LOAD

From GER 4211:

Typical base load distillate fuel – m = 13lb/s

$\rho = 53.94\ lb/ft^3$

$SG = 53.94\ lb/ft^3 / 62.4\ lb/ft^3$

SG = .8644

13 lb/s * 60 sec/min / (8.33 lb/gal * .8644) = **108.32 gpm →**

CALCULATION OF VELOCITY IN 4" SUCTION ASSUMING MAXIMUM FLOW RATE: 150 GPM

Q = Av

Q = Flow rate (ft^3/sec)

A= Average cross sectional area (ft^2)

v = Average velocity (ft/s)

231 in^3 = 1gal

(150 gpm * 231 in^3/gpm) = $\pi \times 4^2/4 \times v$

v = 2757 in / min or **3.83 ft / sec**

Per AGM 02-0204-PLA-P-0009:

μ = .004Pa-s

.0209 (lb-s/ft^2)/Pa-s

.004Pa-s * .0209 (lb-s/ft^2) = **8.36 x 10-5 lb-sec/ft2**

ρ = 53.94 lb/ft^3

SG= 53.94 lb/ft^3 / 62.4 lb/ft^3

SG = .8644

1lb = 0.03108 slugs

53.94 lb/ft3 * .03108 lb/slug = **1.6765 slugs/ft^3**

Solving for on-skid suction losses:

Losses in Fittings

$hfl = K * v^2/2g$

hfl = Friction Loss through obstruction

K = Friction coefficient (dimensionless)

g= acceleration due to gravity (ft/sec^2)

v = velocity (ft/sec)

LF Suction Losses		
Description	**qty**	**K**
4" reg 90 ell	1	0.225
4” tee branch flow	1	0.7
4” butterfly valve	1	1.5
4”x3” reducer	1	0.25
basket strainer	1	1.1

K =	3.775

$hfl1 = 3.775 * (3.832\ ft/s)^2 / (2*32.2\ ft/s2)$

hLl1 = 0.295ft Diesel * 0.8644 = **.86 ft Diesel**

hLl2 skid = 1.15 ft Diesel * 0.8644 = **0.743 ft H20**

.743 ft * .433 psi/ft = **0.322 psi**

Assuming 1 psi suction head (flooded suction):

1psi + 0.322 psi = **1.322 psi suction required at inlet flange**

7.1.3. CALCULATION OF VELOCITY IN 3" DISCHARGE ASSUMING MAXIMUM FLOW RATE: 150 GPM

Q = Av

Q = Flow rate (ft^3/sec)

A= Average cross sectional area (ft^2)

v = Average velocity (ft/s)

231 in^3 = 1gal

(150 gpm * 231 in^3/gpm) = $\pi \times 4^2/4 \times v$

v = 4902 in / min or **3.83 ft / sec**

Reynolds Number Calculation:

NR = [3.83ft/sec x 4 in/12in/ft x 1.6765 slugs/ft3] /8.36 x 10-5 lb-sec/ft3

NR = 25599

RR = (3/12)/1.5x10-4 = 2222

Moody's Diagram → **f=.025**

Head Loss Calculation:

$hL = f \times L/D \times v^2/2g$

Where:

hL = Head loss in straight pipe (ft)

L = Length (ft)

D = Diameter (ft)

f= Friction Factor (dimensionless)

v = Average Velocity (ft/s)

$hLf = 0.025 \times [100\ ft/(4/12)] \times [(3.83\ ft/sec)^2 / (2 \times 32.2\ ft / sec2)]$

hLf = 1.71 ft diesel / 100 ft

hLf = 1.71 ft diesel / 100 ft * 0.8644 = **1.48 ft H20/100ft**

Pipe Runs		
	Suction	**Discharge**
Unit 1	(ft)	(ft)
Liquid Fuel	228	**1546**
Demin Water	**33**	1102
Unit 2		
Liquid Fuel	**367**	1493
Demin Water	22	**1117**

Pipe Run = 1546'

hLf = 1546 ft/ 100ft x 1.48 ft H20 / 100 ft = **22.82 ft H20**

Losses in Fittings:

$hfl = K * v^2/2g$

hfl = Friction Loss through obstruction

K = Friction coefficient (dimensionless)

g= acceleration due to gravity (ft/sec^2)

v = velocity (ft/sec)

LF Discharge Losses - 4"		
Description	**qty**	**K**
4" Ball Valve	3	0.06
4" gate valve	2	0.15
4" reg 90 ell	21	0.225

K =	5.205

hLl =5.205 * (3.83 ft/s)^2/ (2*32.2 ft/s2)

hLl = 1.09 ft Diesel *0.8644 = **1.02ft H20**

LF Discharge Losses - 3"		
Description	**qty**	**K**
2x3 reducer	1	0.05
3" branch flow	1	0.7

K =	0.75

hLl =.75 * (6.81 ft/s)^2/ (2*32.2 ft/s2)

hLl = 0.54 ft Diesel *0.8644 = **0.47ft H20**

LF Discharge Losses - 2"		
Description	**qty**	**K**
2 x 1.5 reducer	1	0.05
2" ball valve	1	0.07

2" 90 ell	1	0.37
2" check	1	2

K =	2.49

hLl =.75 * (15.32 ft/s)^2/ (2*32.2 ft/s2)

hLl = 9.07 ft Diesel *0.8644 = **7.84ft H20**

hL = hLf + hLl…

hL = 22.82 ft H20 + 1.02 ft H20 + 0.47 ft H20+ 7.84 ft H20

hL = **32.16 ft H20**

Calculation for total losses:

Turbine Elevation: 7.44M + .25m

Liquid Fuel Elevation: 5.3M

Difference in Elevation: 2.39M = 7.83 ft diesel *0.8644 = **6.77 ft H20**

Pressure required at Unit: 60 psi

+ 138.56 ft H20 – Pressure at unit

+ 6.77 ft H20 - Elevation

+32.16 ft H20 – Friction losses

-0 – NPSHA

Required differential – 177.5 ft H20 = 76.86 psi

Design Pressure = Req. Differential * 1.125 = **86.47 psi**

Liquid Fuel Forwarding Pump Requirements vs. Turbine Demand				
	Fuel Req at Unit	**Pressure Required at Unit**	**Pump Pressure**	**Estimated Bypass Flow to Tank**
	gpm / [m^3/h]	psi / [kPa]	(psi / [kPa])	(gpm / m^3/h)
Startup/Trip	0 / [0]	60 / [413]	87 / [600]	150 / [34.1]
Light off	6.5 / [1.48]	60 / [413]	87 / [600]	143.5 / [32.62]
Increasing load	6.5-108 / [1.48-24.5]	60 / [413]	87 / [600]	143.5 - 42 / [32.62 - 9.6]
Full Speed Full load	108 / [24.5]	60 / [413]	87 / [600]	42 / [9.6]

Liquid Fuel Forwarding Summary		
ρ =	53.94 lb/ft^3	
μ =	8.36E-05 lb-sec/ft^2	
Max Turbine Demand	108	gpm
Forwarding Rate	150	gpm
Pressure required at Unit	60	psi
Total Losses	84.83	ft
Required Differential	76.86	psi
Design Differential	86.47	psi

7.2. MECHANICAL CALCULATIONS – DEMINERALIZED WATER FORWARDING (P-0403A/S, P-0404 A/S)

7.2.1. ASSUMPTIONS

- Pressure required at unit – 40psi (from AGM-02-0204-PLA-P-0047)
- Demineralized water max rate – Sufficient to abate NOx emissions within operational range of 42-150 ppm.
- Lightoff demineralized water rate – 0gpm
- Piping, skid locations, elevations per AGM- 02-0204-PLA-G-0057 and supplied orthographic drawings.
- Pump suction assumed to be flooded for sizing, as accurate NPSHA cannot be calculated from information supplied.
- Discharge losses calculated from skid losses, pipe run, and pipe fitting count only. Customer supplied valves not included.
- Design factor = 1.125

7.3. CALCULATIONS FOR PUMP / MOTOR SPECIFICATIONS

From Liquid Fuel Calculations:

Typical base load distillate fuel – 13lb/s → **108.32gpm**

From GER4211:

Maximum baseload water to fuel mass ratio – 1:1

$Q_{fuel} * m_{fuel} = Q_{water} * m_{water}$

108.32gpm *8.33 lb/gal *.8644 = Q_{water} * 8.33 lb/gal

Q_{water} = 93.63 gal/min

7.4. CALCULATION OF VELOCITY IN 4" SUCTION ASSUMING MAXIMUM FLOW RATE: 230 GPM

Q = Av

Q = Flow rate (ft^3/sec)

A= Average cross sectional area (ft^2)

v = Average velocity (ft/s)

231 in^3 = 1gal

(230 gpm * 231 in^3/gpm) = $\pi \times 4^2/4 \times v$

v = 4228 in / min or **5.87 ft / sec → Need review of suction piping sizing**

AGM-02-0204-PLA-P-0009:

μ =.000851 Pa*s

.0209 (lb-s/ft^2)/Pa-s

.000851Pa-s * .0209 (lb-s/ft^2) = **1.7786 x 10-5 lb-sec/ft2**

1lb = 0.03108 slugs

62.8 lb/ft3 * .03108 lb/slug = **1.95 slugs/ft^3**

Demineralized Water Forwarding – Skid Suction Losses

Q = Av

Q = Flow rate (ft^3/sec)

A= Average cross sectional area (ft^2)

v = Average velocity (ft/s)

231 in^3 = 1gpm

(115 gpm * 231 in^3/gpm) = π x 3^2/4 x v

v = 3758 in / min or **5.21 ft / sec**

Description	qty	K
3" tee - branch	1	0.7
3" ball valve	1	0.07
3" 90 ell	1	0.325
3" butterfly	1	1.5
3"x1.5" reducer	1	0.5
	Total K	3.095

K= 3.095

hLl skid = 3.095 * (5.21 feet/sec)^2/ (2*32.2 ft/s2)

hLl skid = **1.30 ft H20**

1.3 ft H20 * .433 psi/ft = 0.5629 psi

Assuming 1 psi suction head (flooded suction):

1psi + 0.563 psi = **1.563 psi suction required at inlet flange**

7.5. CALCULATION OF VELOCITY IN 3" DISCHARGE ASSUMING MAXIMUM FLOW RATE: 115 GPM

From above:

v = 5.21 ft/s

μ = 1.7786 x 10-5 lb-sec/ft^2

Reynolds Number Calculation:

NR = (vDρ)/μ

Where:

NR = Reynolds Number

v = Average Velocity (ft/s)

ρ = Density (lb / ft^3)

μ = Dynamic Viscosity (lb-sec/ft^2)

NR = [5.21 ft/sec x 3in / 12in/ft x 1.95 Slugs/ft3] /1.7786 x 10-5 lb-sec/ft^2

NR = 142,801

RR = (3in / 12in/ft)/1.5x10-4 = 1666 →Moody's Diagram

f=0.0215

Head Loss Calculation:

hL = f x L/D x v^2 /2g

Where:

hL = Head loss in straight pipe (ft)

L = Length (ft)

D = Diameter (ft)

f= Friction Factor (dimensionless)

v = Average Velocity (ft/s)

hLf = 0.0215 x [100 ft/(3/12)] x [(5.21 ft/sec)^2 / (2 x 32.2 ft / sec2)]

hLf = **3.64 ft H20 / 100 ft**

Pipe Runs		
Unit 1	**Suction** (ft)	**Discharge** (ft)
Liquid Fuel	228	**1546**
Demin Water	**33**	1102
Unit 2		
Liquid Fuel	**367**	1493
Demin Water	22	**1116**

Pipe run = 1116 feet

hLf = 1116 ft/ 100ft x 3.64 ft H20 / 100 ft = **40.60 ft H20**

Losses in Fittings

$hfl = K * v^2/2g$

hfl = Friction Loss through obstruction

K = Friction coefficient (dimensionless)

g= acceleration due to gravity (ft/sec^2)

v = velocity (ft/sec)

Demin Water Forwarding - 3"		
Description	**qty**	**K**
3" tee - branch	1	0.7
3" ball valve	3	0.07
3" gate valve	1	0.2
3" 90 ell	18	0.325
	Total K	6.76

$hfl = 6.76 * (5.21\ ft/s)^2 / (2*32.2\ ft/s2)$

hLl = **2.86 ft H20**

Demin Water Forwarding - 2"		
Description	**qty**	**K**
2x3 reducer	1	0.05
1x2 reducer	1	0.05

K =	0.1

(115 gpm * 231 in^3/gpm) = π x 2^2/4 x v

v = 8453 in / min or **11.74 ft / sec**

hfl = 0.1 * $(11.74\ ft/s)^2$ / (2*32.2 ft/s2)

hLl = **0.214 ft H20**

hL = hLf + hLl…

hL = 38.61 ft H20 + 2.86 ft H20 + 0.214 ft H20

hL = **43.68 ft H20**

Calculation for total losses:

Turbine Elevation: 7.44m + .25m

Demineralized Water Elevation: 6m

Difference in Elevation: 1.69m = 5.54 ft H20

Pressure required at Unit: 40 psi

+ 92.38 ft H20 – Pressure at unit

+ 5.54 ft H20 - Elevation

+43.68 ft H20 – Friction losses

-0 – NPSHA

Required differential – 141.6 ft H20 = 61.31 psi

Design Pressure = Req. Differential * 1.125 = **68.98 psi**

Demineralized Water Forwarding Pump Requirements vs. Turbine Demand

	Demin Req at Unit	Pressure Req. at WI Skid	Pump Pressure	Estimated Bypass Flow
	(gpm / m^3/h)	(psi/kPa)	(psi/kPa)	(gpm / m^3/h)
Startup/Trip	0 / [0]	**40 / [275.8]**	69 / [475]	115 / [26.1]
Light off	0 / [0]	**40 / [275.8]**	69 / [475]	100 / [22.7]
Full speed, increasing load	0-max / [3.41-max]	**40 / [275.8]**	69 / [475]	100 - 0 / [22.7 - 0]
Specified Max Rate	50 / [11.4]	**40 / [275.8]**	69 / [475]	70 / [15.9]
Full Speed Full load	105 / [23.8]	**40 / [275.8]**	69 / [475]	0 / [0]

Demineralized Water Forwarding Summary

ρ =	62.8	lb/ft^3
μ =	1.78E-05	lb-sec/ft^2
Max Turbine Demand	94	gpm
Forwarding Rate	115	gpm
Pressure required at Unit	40	psi
Total Losses	43.68	ft
Required Differential	61.31	psi
Design Differential	68.98	psi

8. GENERAL 1

Texto GENERAL 1

a. Caso 1
b. Caso 2
c. Caso 3

- Viñeta GENERAL 1
  - Viñeta Indentada 1
    - Viñeta Indentada 2

8.1. TITULO GENERAL 2

Texto GENERAL 1

a. Caso 1
b. Caso 2
c. Caso 3

- Viñeta GENERAL 1
  - Viñeta Indentada 1
    - Viñeta Indentada 2

8.1.1. TITULO GENERAL 3

Texto GENERAL 1

a. Caso 1
b. Caso 2
c. Caso 3

- Viñeta GENERAL 1
  - Viñeta Indentada 1
    - Viñeta Indentada 2

8.1.1.1. TITULO GENERAL 4

Texto GENERAL 1

a. Caso 1
b. Caso 2
c. Caso 3

- Viñeta GENERAL 1
  - Viñeta Indentada 1
    - Viñeta Indentada 2

ANEXO 1.- TITULO ANEXO 1

GEI 41047J
Revised, July 2002

GE Power Systems

Gas Turbine Liquid Fuel Specifications

TABLE OF CONTENTS

I. GENERAL

This specification is for the several types of liquid fuels suitable for use in the General Electric heavy duty gas turbines with firing temperatures of 1600°F (870°C) or higher. It is intended as a guide for users of these turbines for the procurement, use, and where necessary, treatment of fuels.

The fuel properties specified herein include both those which could affect turbine operation and those additional properties which the turbine user may need to specify for his installation. These latter properties are related to fuel storage and handling and local safety and environmental codes.

All of the fuels covered in this specification shall be hydrocarbon oils free from organic acids and free from excessive amounts of solid, fibrous or other foreign matter likely to make frequent cleaning of suitable filters necessary. The fuels shall be stable over storage and shall be compatible with other fuels with which they could normally be mixed.

Procurement of the fuel to specifications is only the first step to successful heavy duty gas turbine operation. Further steps required of the user are: (a) prevention of contamination before, during, and after delivery, (b) proper design of fuel storage, heating and transfer facilities, (c) proper management of the entire facilities with regard to maintenance procedures and schedules and (d) proper design and operation of any fuel treatment equipment.

In addition to outlining the overall fuel requirements, this specification also defines minimum acceptable air quality standards for turbine inlet air, and water requirements for installations which employ either steam or water injection in their cycles. These have been included since the total contaminants entering the turbine must be considered.

II. FUEL CLASSIFICATION AND OPERATIONAL CONSIDERATIONS

Liquid fuels applicable to heavy duty gas turbines range from petroleum naphthas to residual fuels. Within this range, fuels vary in hydrocarbon composition, physical properties, potential pollutants and trace metal contaminant levels. Since contaminants are a most important consideration in fuel application, the liquid fuels have been divided into two basic classes: true distillates (ash-free) and ash-bearing fuels.

Table 1 summarizes the general types of liquid fuels in these two classes and some operational requirements in gas turbine applications. Refer to Appendix A for common names and characteristics of specific fuels within each general type.

III. FUEL SPECIFICATIONS

The required physical and chemical properties of the four classes of liquid fuels are detailed in Table 2. These properties have been divided into two categories: those required for gas turbine performance (Section 3.1, Table 2) and those which may be limited to meet local environmental codes (Section 3.2, Table 2).

Maximum allowable limits are specified for five critical trace metal contaminants: sodium, potassium, vanadium, lead and calcium. General Electric heavy duty gas turbines will operate at levels higher than those specified in Table 2; however, increased maintenance of hot gas path parts may result. Therefore, it is required that the General Electric Gas Turbine Division be consulted for fuel treatment recommendations when the analysis of the fuel as delivered to the gas turbines exceeds the levels indicated. Fuels outside of the specified limits of certain physical properties may also be used, but General Electric should be consulted for consideration of any impact on the operation of the turbine or fuel treatment system, where required.

The Ash-Bearing Fuels in Table 2 are divided into two types: l) Crudes and Blended Residual Fuels, and 2) Heavier Residual Fuels. The heavy-duty gas turbine will operate satisfactorily on both types, although fuel treating and heating requirements and stack particulate emission levels will generally be less for the first type (Crudes and Blended Residual Fuels).

Table 1 - Comparison of Liquid Fuels and Some Hardware Requirements

	True Distillates		**Ash-Bearing Fuels**	
Fuel Type	**Light**	**Heavy Blended Residual Fuels**	**Crudes and Blended Residual Fuels**	**Heavier Residual Fuels**
General Properties Ash Content Viscosity Volatility	Trace Low High/Medium	Trace Medium Medium	Low/Medium Wide Range Wide Range	High High Low
Nearest ASTM Type* Gas Turb., D2880 Burner, D396 Diesel, D975	0-GT, 1-GT 2-GT 1, 2 1-D, 2-D	3-GT (4) (4-D)	3-GT 4, 5 4-D	4-GT 6 —
Explosion-Proofing	Refer to applicable codes	Refer to applicable codes	Refer to applicable codes	Refer to applicable codes
Start-Up Fuel Required	With very light fuels	Some fuels	Nearly always	Always
Fuel Pretreatment	Usually none	Usually none	Nearly always	Always
Fuel Preheating	Some in cold locations	Nearly always	Nearly always	Always
Fuel Filtration	Always	Always	Always	Always
Fuel Combustion Atomization	Low pressure air	Low pressure air	Low or high pressure air	High pressure air
Combustor	Standard fuel	Standard fuel	Heavy fuel	Heavy fuel
Turbine Cleaning Capability	Not Required	Not Required	Required	Required

** Book of ASTM Standards, parts 23 and 24*
Note: The considerations listed in this table are not all-inclusive.

Table 2 - Liquid Fuel Specifications

				True Distillates (b)		Ash-Bearing Fuels (b)	
Applicability	**Property**	**Point of Applicability (a)**	**ASTM Test Method (c)**	**Light**	**Heavy**	**Crudes and Blended Residual Fuels**	**Heavier Residual Fuels**
3.1 Gas Turbine Requirements	Kin. Viscosity, cSt, 100°F (37.8°C), min	Delivery	D445	.5(d)	1.8	1.8	1.8
	Kin. Viscosity, cSt, 100°F (37.8°C), max (e)	Delivery	D445	5.8	30	160	900
	Kin. Viscosity, cSt, 210°F (98.9°C), max (e)	Delivery	D445	—	4	13	30
	Specific Gravity, 60°F (15.6°C), max	Delivery	D1298	Report	Report	.96	.96(f)
	Flash Point, °F(°C), min (g)	Delivery	D93	Report	Report	Report	Report
	Distillation Temp. 90% Point, °F(°C), max	Delivery	D86	650(338)	Report	—	—
	Pour Point, °F(°), max	Delivery	D97	0 (-18) or 20 (7) below min. ambient	Report	Report	Report
	Hydrogen, Wt %, min (k)	Delivery	(i)	Report	Report	Report	Report
	Carbon Residue, Wt. % (10% Bottoms) max Direct Pressure Atomization	Delivery	D524	.25	—	—	—
	Carbon Residue, Wt. % (100% Sample) max Air Atomization, Low Pressure	Delivery	D524	1.0	1.0	1.0	—
	Carbon Residue, Wt. % (100% Sample), Air Atomization, High Pressure	Delivery	D524	—	—	Report	Report
	Ash, ppm, max	Combustor	D482	50	50	Report	Report
	Trace Metal Contaminants, ppm, max (h)	Combustor	(i)				
	Sodium plus Potassium			1	1	1	1
	Lead			1	1	1	1
	Vanadium (untreated)			.5	.5	.5	.5
	Vanadium (treated 3/1 wt. ratio Mg/V)			—	—	100	500
	Calcium			2	2	10	10
	Other Trace Metals above 5 ppm			Report	Report	Report	Report
The specifications below apply only when specific environmental codes exist							
3.2 Environmental Code Related Requirements	Sulfur, Wt. %, max	Delivery	D129	Compliance to any applicable codes.			
	Nitrogen, Wt. %, max	Delivery	(i)	Fuel-bound nitrogen may be limited to meet any applicable codes on total NO_x emission.			
	Hydrogen, Wt. %, min.	Delivery	(i)	Minimum hydrogen level may be necessary to meet any applicable stack plume opacity limits (k).			
	Ash plus Vanadium, ppm, max.	Delivery	(i)	Ash plus vanadium content of ash-bearing fuels may be limited to meet applicable stack particulate emission codes (l).			

NOTES TO TABLE 2

a. The fuel properties specified refer to the fuel at different points in the overall system:
Delivery — Fuel as delivered to the turbine site.
Fuel Skid — Fuel at inlet of fuel skid at turbine.
Combustor — Fuel at turbine combustors.

b. Typical fuels within each general type are discussed in Appendix A.

c. ASTM Book of Standards, Parts 23 and 24.

d. In the viscosity range of 0.5 cSt to 1.8 cSt, special fuel pumping equipment may be required.

e. The maximum allowable viscosity at the fuel nozzle is 20 cSt for high pressure air atomization and 10 cSt for low pressure air and direct pressure atomization. The fuel may have to be preheated to reach this viscosity, but in no instance shall it be heated above 275°F (135°C). (This maximum fuel temperature of 275°F is allowed only with residual fuels.) The viscosity of the fuel at initial light-off must be at or below 10 cSt.

f. A specific gravity of 0.96 is based on average fuel desalting capability with standard washing systems. Fuels with specific gravities greater than 0.96 may be desalted to the required minimum sodium plus potassium limits by using higher capability desalting equipment (with higher attendant cost) or by increasing the gravity difference between the fuel and wash water by blending the fuel with a compatible distillate.

g. The fuel must comply to all applicable codes for flash point.

h. A total ash less than 3 ppm is acceptable in place of trace metal analysis.

i. No standard reference tests exist; methods used should be mutually acceptable to General Electric and the user.

j. Water content of crude oils should be reduced to the lowest level practical consistent with capability of available fuel treatment equipment, to minimize the chance of corrosion of fuel system components. In no case shall the water content exceed 1.0 vol. %.

k. A minimum hydrogen content is set both to control flame radiation in the combustor and to limit smoke emissions, where the latter is required by local codes. The limits are 12.0% minimum for true distillates and 11.0% for Ash-bearing fuels (11.3% where the carbon residue exceeds 3.5%). In each case it is assumed that the proper combustor and fuel atomization system are used.

   Where the hydrogen content of the fuel is below these limits, General Electric should be consulted for appropriate action.

l. Local codes on total stack particulate emissions may set an upper limit on the sum of the ash (non-filterable) in the original fuel plus the vanadium content. The vanadium together with the required magnesium inhibitor may be a major contributor to total stack particulate emissions. In estimating these emissions for comparison with the code, all of he following sources may have to be considered: vanadium, additives, fuel ash and total sulfur in the fuel; non-combustible particulates in the inlet air; solids from any injected steam or water; and particles from in-

complete fuel combustion. Where an estimate of stack particulate emissions is required, General Electric should be consulted.

IV. FUEL HANDLING AND TREATMENT

A. True Distillate Fuels

Light true distillate fuels normally have sufficiently low pour points that preheating is not required under most ambient conditions. Heavy true distillates, on the other hand, may have high pour points due to high wax content or high wax melting temperature which make preheating necessary to prevent filter plugging. Both types of distillates may also require preheating to meet the viscosity requirement at the fuel nozzle for proper atomization.

True distillate fuels as refined have low water, dirt and trace metal contaminant levels. Where subsequent transportation, handling and storage are carefully managed, these low levels should persist at the gas turbine. In locations where there is danger of contamination such as salt bearing water, auxiliary fuel clean-up equipment should be provided to restore the original quality.

In addition to potential hot corrosion from salt in water, water accumulated at the bottom of a storage tank can also cause problems. Micro-organisms tend to grow at the water-fuel interface generating both chemicals corrosive to metals in the fuel system and also slime which can plug fuel filters.

Adequate fuel storage and handling practices must be employed to minimize water and other contaminants in the fuel. These include settling the fuel before use, providing floating suction and periodic removal of water from the bottom of the tank. In applications where adequate settling periods can not be accommodated, more rapid purification methods may be required. Available purification equipment includes centrifuges and electrostatic dehydrators. The overall fuel system design should avoid slugs of water, and any clean-up system should have the capability to remove such slugs.

B. Ash-Bearing Fuels

Depending on the physical properties and the trace metal contaminant levels of these fuels, functions of the source and refinery treatment, they usually require pretreatment before burning in a gas turbine. Three basic steps in pretreatment are:

1. Preheating
2. Water washing for salt removal
3. Vanadium inhibitor addition

Preheating is used where it is necessary to: l) raise the fuel temperature sufficiently above its pour point to allow free flow and to prevent filter plugging, and 2) to lower the fuel viscosity to reduce the flow resistance and to provide proper atomization at the fuel nozzles.

Desalting by water washing will be necessary with some crude oils and is nearly always necessary with residual oils to reduce the sodium plus potassium levels. Sodium and potassium can cause hot corrosion of the turbine blading by sulfidation attack at the operating temperatures of the turbine. Sodium and potassium can also contribute to turbine fouling. Desalting is accomplished by mixing the fuel with 3% to 10% potable water to extract the soluble salts, followed by separation of the salt-laden water by cen-

trifugation or electrostatic coalescence. Washing also removes some of the calcium depending on the specific chemical nature of the calcium compounds. Lead is not removed by water washing.

Vanadium can also cause hot corrosion of the turbine blading, but it is not removed by water washing because it is present in the fuel in a complex oil-soluble form. The corrosive action can be inhibited by adding an approved magnesium additive to the fuel to provide a minimum 3 to 1 weight ratio of magnesium to vanadium. It is also recommended that this ratio not exceed 3.5 to 1 in order to minimize deposition.

Periodic cleaning of deposits from turbine hot gas path section is generally necessary when high ash content fuels are used. Cyclic operation of the turbine may remove some the deposit by thermal shock. General Electric should be consulted for approved cleaning agents, water quality and cleaning procedures for those applications where turbine cleaning is required.

V. NON-FUEL CONTAMINANTS

A. Air-Borne Contaminants

Contaminants in air can cause erosion, corrosion and fouling of the compressor. These contaminants can also contain the same trace metals as found in fuels and which cause corrosion to the hot section.

Compressor erosion can be caused by sand or flyash; compressor corrosion by noxious fumes such as HCl or H_2S0_4; compressor fouling by liquid or solid particles which adhere to the compressor blading. Hot section corrosion can be caused by sodium from, e.g., sea salt, salt particles, carry-over of treatment chemicals used in evaporative coolers, chemical process effluents; potassium from flyash or fertilizers; lead from automobile exhausts; and vanadium from residual fuel fired steam plants.

Specifically, with respect to hot section corrosion, the total of Na, K, V and Pb should not exceed 0.005 ppm by weight in air. If it is anticipated that this level will be exceeded, General Electric should be consulted for recommendations on the selection and use of proper air filtration equipment.

B. Water-Borne Contaminants

Water or steam that is used for NO_x control or steam that is injected to augment output should not contain impurities which cause hot section deterioration or deposits. Specifically, the total of Na + K + V + Pb should not exceed 0.5 ppm by weight in the water or steam. If the total of these contaminants exceeds this level, General Electric should be consulted with respect to water or steam purification equipment and procedures.

In the case where contaminants are present in water or steam the total limits in the fuel should be controlled such that the total concentration equivalent in the fuel (from both sources) conforms to the limits in Table 2.

Refer to the next section 5.3 for the method for calculating the equivalent concentration in the fuel.

C. Non-Fuel Contaminant Relationships

The total contaminant level in the combustion products must be controlled. The following relationship can be used to convert the contaminants in air, steam/water and fuel to equivalent contaminants in the fuel alone, assuming all are equally effective:

$$\left(\frac{A}{F}\right) X_A + \left(\frac{S}{F}\right) X_S + X_F = [\ \textit{Equivalent contaminants in fuel alone}\ ]$$

where:

$\frac{A}{F}$ = *air-to-fuel mass flow ratio*

$\frac{S}{F}$ = *steam/water-to-fuel mass flow ratio*

X_F = *contaminant concentration (weight) in fuel (ppm)*

X_A = *contaminant concentration (weight) in inlet air (ppm)*

X_S = *contaminant concentration (weight) in injected steam/water (ppm)*

VI. FUEL AND ADDITIVE EVALUATION AND SAMPLING

A. Fuel Evaluation Procedure

A supplier's fuel analysis shall be submitted to the General Electric Gas Turbine Division covering all the fuel requirements outlined in Table 2 of this specification. If the required analytical services are not available to the user, he may make arrangements to purchase such services from General Electric. See Appendix C for fuel sampling and analysis requirements.

B. Requalification of Fuel: Fuel Changes

The fuel properties outlined in the specification and originally agreed upon by General Electric Company and the user will determine some of the equipment selection and certain operating conditions of the gas turbine system. If at a later date the user desires to use a fuel outside of the original agreed-upon limits, he should inform the General Electric Company in writing. He should supply a complete analysis for evaluation and requalification in a similar manner as outlined above.

C. Additive Qualification

Additives used in gas turbine fuels such as vanadium inhibitors, desalting demulsifiers, bacterial growth retardants or smoke suppressants must meet the approval of the General Electric Gas Turbine Division. One critical requirement of an additive is that it has a low trace metal content (sodium, potassium, vanadium, calcium and lead), so that the inhibitor does not add these contaminants to the fuel.

APPENDIX A - FUEL DESCRIPTIONS

A. True Distillates

1. Light True Distillates

Naphtha - A light volatile fuel with a boiling range between gasoline and Light Distillate. The lower flash point and higher volatility require special safety considerations. Its very low viscosity may result in poor lubricity.

Other Names:
JP-4, Jet B
O-GI Gas Turbine Fuel

Kerosene - A light, highly refined and slightly more volatile fuel than Light Distillate. Normally more expensive than No. 2 distillate.

Other Names:
1-GT Gas Turbine Fuel
No.1 Burner Fuel
1-D Diesel Fuel
JP-5, Jet A
Range Oil, Lamp Oil

Light Distillate - Widely available volatile distillate fuel with good combustion characteristics, being readily atomized and clean burning.

Other Names:
2-GT Gas Turbine Fuel
No. 2 Burner Fuel
Diesel Oil
Marine Gas Oil
Domestic Fuel

Diesel Fuel - Closely related to Light Distillate fuel except for additional requirements peculiar to diesel engine operation such as Cetane Number.

Other Names:
2-D Diesel Fuel

2. Heavy True Distillate

An essentially ash-free petroleum distillate with the highest boiling range. Heavy True Distillate has had limited and localized availability, frequently being a refinery by-product. This fuel may require heating for handling and forwarding due to high pour point. It may also be more difficult to atomize for optimum combustion.

Other Names:
Heavy Gas Oil
Navy Standard Distillate

B. Ash-Bearing Fuels

1. Crudes and Blended Residual Fuels

Crudes - Crude oils from different geographical areas vary widely in levels of trace metal contaminants, ash, sulfur and wax and in such physical properties as viscosity, gravity and distillation range. Most crudes will have flash points below 100°F (38°C) due to highly volatile components. Some very low ash crudes, typified by Indonesian and North African crudes, have 0 to 5 ppm of vanadium requiring minimal or no inhibition. Other crudes for gas turbine application range up to 100 ppm vanadium. Most crudes require desalting, especially if water transportation has been used.

Blended Heavy Distillate - Petroleum distillate contaminated with or blended with lesser amounts of residual petroleum products, but with vanadium contents of 5 ppm or less. They may have wax contents requiring heating for pumping and filtering. They may also require washing for desalting, especially if water transportation has been used.

Other Names:
3-GT Gas Turbine Fuel
4-D Diesel Fuel
Marine Diesel Fuel

Blended Residuals - Blended residuals lie between blended heavy distillates and heavy residuals. They are commonly blended to specific maximum sulfur levels to meet applicable codes. Vanadium contents are in the 5 ppm to 100 ppm range normally. These fuels require complete fuel treatment.

Other Names:
No. 4 Burner Fuel
No. 5 Burner Fuel
Light Residual Oil
Light Furnace Oil
Intermediate Bunker Fuel

2. Heavier Residual Fuels

Residual Fuels - These are low volatility petroleum products remaining at the end of all various refinery distillation processes. As such they contain nearly all of the ash-forming materials present in the original crude oil plus some additional that may be introduced in processing. They usually contain high molecular weight hydrocarbons such as asphaltenes, which can cause storage sludging problems. Residual fuels may have been blended with low cost distillates to lower the sulfur content and/or reduce the viscosity to insure pumpability.

All residual fuels require heating for pumping, filtering and proper air atomization at the fuel nozzle. Residual fuels all require washing to reduce the sodium level and vanadium inhibition by addition of a General Electric approved Magnesium base additive.

Other Names:
No. 6 Burner Fuel
Boiler Fuel
Bunker C. Fuel
Marine Fuel Oil

APPENDIX B - MEANING OF SPECIFICATION TESTS

Chemical tests are specified because slag-forming substances present in oil ash can cause turbine corrosion and deposits, and the presence of sulfur can result in corrosion of heat recovery equipment in the turbine exhaust. Certain physical tests are specified because they influence the operation of the gas turbine fuel handling, fuel treatment and combustion systems.

A. Ash and Trace Metal Contaminants

Ash-forming materials may be present in a fuel as oil-soluble organometallic compounds, as water soluble salts in water dispersed in the fuel or as solid foreign contaminants. The most common ash-forming elements which can be present in fuels are aluminum, calcium, iron, magnesium, nickel, potassium, sodium, silicon and vanadium. Ash-forming materials are present to varying degrees in crude oils depending on their geographical source. They are concentrated in the residual fractions during the refining process, leaving the light distillates contaminant-free; however, ash-forming materials may be introduced later by contamination with salt-bearing water or with other petroleum products during transportation and storage.

Gas turbine operating experience has shown that some of the ash-forming substances that may be present in the fuel can lead to corrosion and deposit problems. These problems are most acute with residual and crude oils which contain larger quantities of the troublesome substances.

Corrosion can result from (l) vanadium, (2) sodium, (3) potassium or (4) lead. These elements as well as calcium (and others such as magnesium, manganese, iron, silicon and aluminum) can cause ash deposits which are difficult to remove. Calcium can act as an effective inhibitor for vanadium corrosion, but its deposition tendencies have precluded its use.

In light distillate fuels, the total ash content is usually very small, and trace metal contamination is essentially a sodium (salt) problem. There are also usually traces of lead and calcium and smaller traces of potassium and vanadium. It is advantageous to purchase fuel within the specified contaminant limits and to maintain this quality during transportation, handling and storage. On-site desalting by contaminated water removal or by fuel washing of distillate fuels with relatively high sodium levels is required to keep corrosion of the hot gas path and the fuel system components such as flow dividers and fuel pumps at a very minimum level.

Crudes and contaminated distillates almost without exception have high enough salt levels, or the risk of significant salt levels, that they require desalting. The vanadium levels may also be significant and require the addition of a magnesium-base inhibitor to establish a ratio of 3 parts of magnesium to 1 part of vanadium by weight.

Residual fuels have the highest ash and trace metal contaminant levels usually necessitating complete fuel pretreatment: desalting and vanadium inhibition by a magnesium-based additive (3Mg/lV). Due to the less favorable physical properties of residual fuels, it is not possible to consistently reduce the sodium to the low levels obtainable in light crudes and distillates. The higher sodium levels in treated residual fuels result in controlled corrosion and deposit accumulation with some increase in maintenance. Calcium levels may be high in some residual fuels, but they may be appreciably lowered by the fuel treatment. Nickel, which is not removed by fuel treatment, may also be high in certain residual fuels and is somewhat beneficial in that it tends to neutralize vanadium corrosion in much the manner of magnesium. Residual fuels contain harmless aluminum, iron and silica as components of suspended solids (dirt). A significant portion of these suspended particles are removed either in the fuel washing or by fuel filtration.

B. Sulfur

Sulfur occurs in fuels as combustible organic compounds yielding sulfur oxides on combustion. These combine with any traces of sodium or potassium present to form alkali sulfates; a principal source of hot corrosion. The sulfur level in a fuel cannot be lowered enough by refining to avoid the formation of alkali sulfates, so that they must be controlled by limiting the sodium and potassium levels in the fuel.

Gas turbine installations utilizing exhaust heat recovery equipment could have metal temperatures below the dewpoint of sulfuric acid, and in these cases it is necessary to know the sulfur level in the fuel to avoid acid corrosion of heat transfer surfaces. The maximum allowable sulfur to avoid sulfuric acid condensation will depend on the specific heat recovery equipment used. For fuels exceeding this maximum level, the operating temperature of the heat recovery equipment could be changed accordingly to avoid condensation of acid products.

The sulfur level of liquid fuels is regulated in many localities as a means of controlling the emission of sulfur oxides in the exhaust gases.

Crude oils burned directly as fuels may also contain active sulfur in the form of hydrogen sulfide or mercaptans. These substances, especially in the presence of water, may cause corrosion to fuel system components. For this reason, the water content of such fuels should be kept as low as possible.

C. Nitrogen

Fuel-bound nitrogen in petroleum fuels comes largely from organo-nitrogen compounds present in the original crude oil. In some distillate fuels, fuel-bound nitrogen may also come from additives such as stabilizers.

This chemically-bound nitrogen in the fuel will contribute to the total nitrogen oxide pollutant in the exhaust gases, adding to the nitrogen oxides from the direct combination of atmospheric nitrogen and oxygen in the gas turbine combustion reaction. The particular combustion system and operating conditions will affect the total nitrogen oxide production from both atmospheric and fuel-bound nitrogen.

D. Hydrogen

The percent combined hydrogen in a hydrocarbon fuel is a critical factor in controlling stack smoke levels. In general, the higher the hydrogen content in a liquid fuel the lower the smoke level will be. As an example: paraffinic hydrocarbons with high hydrogen contents (14-15%) have much less tendency to smoke than do aromatic hydrocarbons which can have 10% or less hydrogen.

Hydrogen is usually determined by an accurate measurement of the amount of water produced in the controlled combustion of a weighed amount of fuel.

E. Carbon Residue

Carbon residue is measured as the residue remaining when a fuel sample is completely distilled in a standard apparatus. To obtain measurable residue with light distillates, the fuel is first distilled to remove 90% (ASTM Method D86) by volume, and then the carbon residue is determined on the “10% Bottoms.”

One effect of a high carbon residue is carbon formation near the fuel nozzle. To control this, air atomization is used in the combustion of all but the lightest fuels, high pressure air being required for the heaviest fuels.

F. Water and Sediment

Water and sediment in a fuel oil tend to cause fouling of the fuel handling facilities and the gas turbine fuel system. Accordingly they should be kept at as low a value as practicable and always within the maximum values shown in this specification.

The sediment in fuel can be gums, resins, asphaltic materials, carbon, scale, sand or mud. It is mainly a problem in residual fuels. Very few distillate fuels leave the refinery with more than 0.05% water and sediment. However, poor handling practices can unnecessarily raise this level, and once an oil becomes contaminated it may not be feasible to restore its original cleanliness, such as the case of lead or vanadium contamination.

Gas turbines are normally equipped with high capacity 5 micron filters. Since there are practical limits to the efficiency of filtration systems, a fraction of the solids entering the filter remains in the oil and can be an important factor in fuel system component life.

Fuel storage tanks should be designed with floating suctions that are equipped with low level bottom limits to insure that the suction is always some distance from the bottom to avoid the water and sediment that collects there. The operator should drain the bottom of the tank periodically to reduce the accumulation and the risk of contamination. Automatic water drainage systems are preferred.

G. Filterable Dirt

Filterable dirt is essentially the suspended solid particulate matter in a distillate fuel which can cause fuel filter maintenance problems. It is measured as the weight of solids held on a low porosity filter during the filtration of a given volume of fuel.

H. Viscosity

The viscosity of fuel is a measure of its resistance to flow. It is important in the fuel auxiliary equipment since it determines pumping temperature, atomizing temperature and oil pump pressure.

In order to obtain proper operation of the gas turbine, the maximum viscosity at the fuel nozzles must not exceed 10 centistokes for pressure atomizing or low-pressure air-atomization fuel systems, and 20 centistokes for high-pressure air-atomizing systems. When these limits are exceeded, poor ignition characteristics, smoking, unsatisfactory combustor exit temperature distribution, lowered combustion efficiency or formation of carbon may occur. In most cases, fuel heating must be employed to insure that these viscosity limits at the fuel nozzle are met under all ambient conditions. In all cases the fuel at initial light-off must be at or below 10 cSt viscosity.

Minimum viscosity limits are imposed to safeguard the high pressure fuel pump, which depends on the lubricating qualities of the fuel for satisfactory operation. It should be noted that naphtha fuel can have a minimum viscosity as low as 0.5 cSt at 100°F (37.8 °C).

Special pumps may be required for viscosities below 1.8 cSt at 100 °F.

I. Pour Point

The pour point of a fuel is the temperature at which it will barely flow under standard conditions, and it is significant in connection with fuels that may require heating to make them pumpable and with fuels fed to a pump by gravity flow.

Petroleum oils when cooled may change to a plastic state as a result of partial separation of wax (wax pour) or by congealing of hydrocarbons (viscous pour) comprising the oil.

A waxy fuel must be maintained at a high enough temperature to ensure that all of the wax is in solution to prevent wax crystals from clogging filters and lines. For distillates, wax separation can usually be avoided by heating the fuel to at least 20-30°F (11-17°C) above the pour point. Waxy crude oils used as fuels may require even higher temperature differentials. Each type of waxy fuel must be evaluated individually for minimum wax solution temperature. (For methods, refer to page C2.)

J. Fuel Gravity

The specific gravity is not a critical property of gas turbine fuels. Within a given fuel type it can indicate the chemical composition of the hydrocarbons. As an example, a distillate with a low specific gravity will be largely paraffinic whereas a high specific gravity will be more aromatic. The latter would have a greater tendency to smoke with other factors being equal.

Gravity can have an economic significance where the fuel is purchased by volume since the total heat units will decrease with decreasing specific gravity.

Residual fuels requiring washing will be more difficult to wash if the specific gravity approaches that of water.

In the petroleum industry it is customary to use API gravity instead of specific gravity for convenience since the API system eliminates the small decimal difference between fuel samples encountered in the use of specific gravity. It is always referenced to 60°F (15.6°C).

$$API = \left[\frac{141.5}{Spec.\ \ Grav.}\right] - 131.5$$

Some typical examples are:

	Specific Gravity	API Gravity
Water	1.00	10.0
Kerosene	0.78-0.83	50-39
No. 2 Distillate	0.82-0.86	41-33
Crudes and Blends	0.80-0.92	45-22
Residual Oils	0.92-1.05	22-3

K. Distillation

The heavy duty gas turbine is not sensitive to the distillation characteristics of the fuel per se.

Extremely volatile fuels such as naphthas require the use of a start-up fuel (light distillate) due to the low temperature at which they vaporize, giving the possibility of combustible vapors in the fuel lines.

Very high end-point fuels, approximately 1000°F (538°C), can have excessive traces of vanadium which have distilled over. For this reason pure distillate usually would have a maximum end point specification. (This is also prevented by setting a maximum vanadium level.)

L. Flash Point

The flash point of a fuel is the temperature at which fuel vapors will flash when ignited by an external flame.

The flash point is regulated for safety in fuel handling and storage. By itself it is not critical to turbine operation although it can affect the requirements for auxiliary equipment such as motors, relays, heaters, etc.

Minimum permissible flash points are regulated by local, state or federal laws.

Explosion-proofing of equipment may be required by local, state or federal regulations or other applicable codes when the flash point is below a minimum permissible value.

M. Thermal Stability

The thermal stability of an oil is a measure of its ability to resist breaking down when heated to form deposits of resins and sludge. This can occur in the fuel nozzle area and in fuel heaters especially if the heater surface is far hotter than the surrounding oil. This polymerization to form deposits is a time–temperature phenomenon: being accelerated by high temperatures, long exposure times and contact with air.

Thermal stability is most critical for high viscosity residual fuels which require high temperatures to meet fuel atomization viscosity requirements. The maximum allowable temperature specified is 275°F (135°C).

N. Compatibility

Mixing certain residual type fuels with dissimilar residual fuels or diluting residual type fuels with certain distillates may result in the formation of tarry precipitates. The precipitation may occur immediately after mixing or may take some time to develop. Heating for prolonged periods of time will generally accelerate the separation.

This tarry residue can accumulate in the bottom of tanks and can settle out in fuel lines and on filters.

When the separation of residue occurs, it is usually in those residual fuels which have a heavy asphaltene fraction present as a collodial mestastable gel; such as those which have had an intensive heating history during refining. The nature of a solvent used for dilution (blending) is also important; paraffinic (low specific gravity) distillates are more apt to cause precipitation than aromatic (high specific gravity) distillates.

One method of testing for compatibility is to make a 50-50 mixture of two oils and then subjecting the mixture to a thermal stability test. A simple screening test is the ASTM D2781, “Compatibility of Fuel Oil Blends by Spot Test.”

ASTM Specifications do not specify this property, again because it has not been the practice of the oil suppliers to make this test. These specifications do not call for the test on the light distillate oils because it is very rare that they encounter compatibility difficulties with one another. However, for the heavier oils, it is necessary to start up and shut down the gas turbine on a light distillate oil; therefore, it is advisable to test the compatibility of the heavy oil/distillate mixture.

O. Cetane Number

Cetane number is an index of the burning quality of fuel in a diesel engine. It is specified only when the turbine fuel is also used in a diesel starting engine.

Cetane number is most accurately measured in a special test engine, but a reasonably accurate value can be obtained from a correlation between the specific gravity and the 50% distillation point.

APPENDIX C - FUEL ANALYSIS DATA REQUIREMENTS

To evaluate a liquid fuel for gas turbine application certain physical and chemical data are required. Basic specification requirements are given in Table 2, Section 3. Certain other data are needed for engineering purposes. Table 3 is a list of required data. Following is pertinent information on some of the analytical tests.

A. Sampling

Since analyses of small traces of metals are involved, and since some tests use small amounts of sample, it is very important that the fuel sample is uniform and representative of the fuel as received by the user or shipped by the supplier. If the fuel is taken from a container, it should be thoroughly mixed mechanically before sampling. For sampling from storage tanks, refer to ASTM Standard Method for Sampling Petroleum Products, D-270-65.

The sample for analysis should be stored preferably in plastic or plastic-lined metal containers. Avoid metal cans with soldered seams and containers with seals (rubber) which can disintegrate and contaminate the fuel. The container should only be about two-thirds full so that it may be well shaken before taking analytical samples. Heavy residual fuels should be in wide-mouth containers.

B. Heating Value

The heating value measured is the High (Gross) Heating Value, where the water produced is condensed. The Low (Net) Heating Value is obtained by calculation from the Higher Heating Value by one of several methods including ASTM D 1405 and D240. The latter requires an accurate value for percent hydrogen while the former requires an aniline point (ASTM D1012) and specific gravity.

C. Viscosity

Viscosities at two temperatures are needed for a viscosity-temperature relationship for the fuel; the two temperatures normally being 100°F (37.9°C) and 210°F (98.9°C). If the pour point is between 70°F (21°C) and 90°F (32°C), the lower temperature should be 122°F (50.0°C). For pour points between 90°F (32°C) and 120°F (49°C), the lower temperature should be 150°F (65.6°C).

D. Carbon Residue

Ramsbottom carbon residue (ASTM D524) is preferred as more accurate . If the Contradson method (ASTM D189) is used, the results should be converted to Ramsbottom (see D524).

E. Trace Metal Analysis

Trace metal contaminant levels are usually measured by spectrometric methods such as atomic absorption, flame emission or a spark source spectrometry. The first two methods use a solvent diluted fuel sample while the latter operates directly on the original fuel. In any case, the reference standards must match the fuel properties as closely as possible. For very accurate analyses of vanadium and lead, it is better to ash the fuel and run the spectrometric analysis on an aqueous solution of the treated ash. In the ashing procedure, special care must be taken not to lose these elements.

F. Wax Content and Wax Melting Point

Crude oils and heavy true distillates should be tested to determine the minimum fuel temperature required to keep all of the wax in solution.

One approach is to remove the wax from the fuel and then to determine its melting point, which represents the maximum solution temperature. There is no standard method for wax separation, but there are several laboratory procedures which are satisfactory. They all involve dilution of the fuel with a poor wax solvent and then chilling to 0°F (–18°C) or lower to separate the wax crystals which are filtered out at low temperature.

An instrumental procedure which measures the wax solution temperature directly on the fuel is Differential Scanning Calorimetry (DSC). This method is still being developed and has not yet been successful with all crude oils.

For light distillate fuels, ASTM D 2500 Cloud Point or ASTM D3117 Wax Appearance Point may be used.

Table 3 – Fuel Analysis Data

Property	ASTM Method (1)	Measured Value
Gross Heating Value, Btu/lb	D240	_____
Kin. Viscosity, cSt, 100°F (37.8°C)	D445	_____
Kin. Viscosity, cSt, 122°F (50.0°C)	D445	_____
Kin. Viscosity, cSt, 210°F (98.9°C)	D445	_____
Specific Gravity, 60°F (15.6°C)	D1298	_____
Specific Gravity, 100°F (37.8°C)	D1298	_____
Pour Point, °F(°C)	D97	_____
Flash Point, °F(°C)	D98	_____
Distillation Range (Not on Residuals)	D86	_____
		_____
		IBP _____ °
		10% _____ °
		20% _____ °
		30% _____ °
		40% _____ °
		50% _____ °
		60% _____ °
		70% _____ °
		80% _____ °
		90% _____ °
		EP _____ °
Carbon Residue, Wt. %	D524	_____
Sulfur, Wt. % (Very Light Distillates)	D1266	_____
Sulfur, Wt. % (All Other Fuels)	D129	_____
Hydrogen, Wt. %		_____
Nitrogen, Wt. %		_____
Total Ash (2), ppm	D482	_____

Table 3 – Fuel Analysis Data (Cont'd)

Trace Metals, ppm (2)		_____
Sodium		_____
Potassium		_____
Vanadium		_____
Calcium		_____
Lead		_____
Other Metals Over 5 ppm		_____
Sediment & Water Vol. %	D1796	_____
Water, Vol. %	D95	_____
Filterable Dirt, mg/100ml	D2276	_____
Wax, Wt. %		_____
Wax, Melting Point, °F		_____
Cetane No. (Diesel Engine Start Only)	D975	_____

(1) Book of ASTM Standards, Part 17
(2) A total ash less than 3 ppm is acceptable in place of trace metal analysis
(3) Wax data only on crudes and heavy distillates

GE Industrial & Power Systems

General Electric Company
One River Road, Schenectady, NY 12345
518 • 385 • 2211 TX: 145354

GEK 101944
April 1995

GE Power Systems
Gas Turbine

Requirements for Water/Steam Purity in Gas Turbines

I. INTRODUCTION

Water/steam, fuel and air all carry contaminants which can cause serious damage to hot gas path components if the levels at which they are present are not controlled. This document identifies the contaminant limits for water/steam entering gas turbines. Ultimately, the total contaminant loading allowed is determined by the fuel specifications (GEI 41047, for liquids, and GEI 41040, for gases), which identify all contaminants entering a gas turbine from all sources. The concern for any contaminants entering the hot gas path is two-fold. Will they cause hot corrosion, as for example do sodium and potassium salts, and will they cause deposits, as for example do calcium salts and silica.

Water and/or steam is injected into the combustion system for NOx control and/or power augmentation, in quantities comparable to fuel flow rates, and must meet strict criteria for purity similar to those required for gas turbine fuels. Furthermore, water/steam chemistries must be compatible with the materials used in the piping which bring the fluids to the turbine.

Water also enters gas turbines with the compressor air. This may occur naturally as from water ingestion in coastal or marine locations, or from rain, or from water produced when humid air is cooled below its dew point at the compressor inlet and a fog develops. Finally, water can enter a compressor as a result of carry-over from such devices as moisture separators or evaporative coolers. Discussion of inlet air treatment is discussed in GER 3419. The effects of water on compressor materials is discussed in GER 3601.

Of course, water of evaporation adds no contaminants to the incoming air, but carry-over water adds the contaminants contained in the water.

Additional sources of water born contaminants which enter the turbine are referenced in the following documents: compressor and turbine washing (GEI 41042 or GEK 103623), and water for dissolving Epsom salt, the heavy fuel vanadium inhibitor (GEK 28122).

II. INJECTION WATER/STEAM SPECIFICATION

Table 1 gives criteria for acceptable water/steam for gas turbine injection. All flows (air, water/steam, and fuel) into the turbine contribute to the contaminants in the combustion gases, and hence to corrosion and deposits in the hot gas path. The fuel specification GEI 41047 states that the sum of the contaminants from all sources, referred to the fuel must satisfy the fuel specification. This part of the fuel specification, given in Table 2, forms the basis for contaminant levels entering the gas turbine from all sources.

Dissolved oxygen, pH, solids, and additives, all quantities considered in the water chemistry of boilers and steam turbines, must also be considered when water/steam is injected into gas turbines.

Water treated with sodium compounds for pH or oxygen control should not be used for injection into gas turbines or for attemperation of steam used for injection into gas turbines. Such water can cause corrosion of the hot gas path components, and also stress corrosion cracking of piping equipment. It should be appreciated that very dilute solutions of some additives become concentrated during operation, through stagnation and evaporation.

This is especially true of NaOH, used sometimes for pH control. Attemperation water, containing NaOH, has produced caustic deposits in 316 stainless steel flex hose by evaporation, resulting in cracking. Units in which this has occurred have reported fuel nozzle deposits, first stage nozzle deposits, and bucket corrosion.

The preferred water sources are clean boiler condensate or demineralized make-up water. Preferred steam sources are from steam turbines. This steam should satisfy GEK 98965, which is a tighter restriction than given in Table 1. Steam from non-steam turbine sources must satisfy Table 1. Volatile additives are permitted

for condensate pH control, such as ammonia, morpholine, and cyclohexylamine. These additives do not add to the alkali burden of the turbine, and will not accumulate in piping, valves, etc.

Deposit formation in the turbine from contaminants in injection water is also a concern. In demineralization ion exchange systems a special situation may arise in the case of silica. Silica absorbed by the anion exchanger may not be completely removed during regeneration causing it to accumulate. Eventually, leakage will occur, allowing silica discharge into the effluent and into the turbine. Such occurrences have lead to combustion liner hole plugging and forced outages. Prevention of silica breakthrough requires longer regeneration times at higher temperatures, and effluent monitoring. *Ion exchange manufacturers should be consulted.* Another problem arises if silica is present in a colloidal form. In this form it can pass through ion exchangers and it cannot be detected by conductivity measurements. *Water treatment experts should be consulted. They can make recommendations concerning proper treatment.*

III. LIMITS ON WATER QUALITY FOR EVAPORATIVE COOLING SYSTEMS

Water quality must be maintained in evaporative coolers in order to ensure good long term system performance. Dirty water will foul the cooler media, eventually resulting in carry-over and possible damage to the gas turbine. Also, water which is very pure, such as demineralized make-up water, may degrade the materials of the cooler. *Consult the operation and maintenance manual for the evaporative cooler for specific details.*

To prevent excessive scaling of the cooler media water should be monitored to maintain one of the stability indices, such as Langelier or Ryznar (See Nalco Water Handbook, McGraw-Hill, 2nd edition, 1988).

When trace metals in the fuel, water or steam are not precisely known, a limit for these contaminants in the inlet air of 0.005 ppm is nominally set (GER 3419). Carry-over limits on contaminants may be obtained from a mass balance on the equivalent carry-over water for a specified contaminant level in the air[(a)]. Thus,

(1) $$W = A(X_a / X_w) = 0.005\ (A / X_w)$$

where W and A are the flows of water and air , respectively, and X_w and X_a are the concentrations (ppm) of the contaminants in the water and air (1), respectively.

Figure 1 gives carry-over limits for gas turbine contaminants based on Equation (1) for several air flows. For example, if the concentration of Na in the make-up water is 100 ppm and the air flow is 300 lbs/sec, then 4 cc/sec would be the limiting carry-over rate.

IV. APPLICABLE REFERENCE DOCUMENTS

GEI 41047	Gas Turbine Liquid Fuel Specification
GEI 41040	Process Specification, Fuel Gases For Combustion in Heavy-Duty Gas Turbines
GER 3419	Gas Turbine Inlet Air Treatment
GER 3601	Gas Turbine Compressor Operating Environment and Material Evaluation
GEI 41042	Gas Turbine and Compressor Cleaning
GEK 103623	Gas Turbine Compressor Washing
GEK 28122	Specification For Magnesium Sulfate For Gas Turbine
GEK 98965	Steam Purity For Industrial Turbines

Nalco Water Handbook, Frank N. Kemmer, Editor, McGraw-Hill, Second Edition, 1988

(a) Although, no standard method exists for sampling compressor air, EPA, 40 CFR 50, gives a number of methods for sampling particulate. Chemical analysis would be according to EPA 200.7 for particular contaminants.

Table 1. Injection Water / Steam Purity Maximum Limits

		Method
Trace Metals:		
Sodium plus Potassium(1)	0.5 ppm	EPA 200.7
Calcium	1.0 ppm	EPA 200.7
Total Solids:	5.0 ppm	
Total dissolved solids		EPA 160.1
Total suspended solids		EPA 160.2

(1) Other metals not normally encountered in water/steam but found in fuel oils, such as vanadium and lead, or other alkali metals such as lithium, are also to be included.

Table 2. Trace Metal Contaminant Specification Maximum Limits, All Sources

Contaminant	Contaminant Limit (ppmw) Referred to the Fuel(1)
Sodium plus Potassium	1.0
Lead	1.0
Vanadium	0.5
Calcium	2.0

(1) The tabulated limits in parts per million by weight (ppmw) are for $A / F = 50$. For other A / F ratios multiply the tabulated limits by $((A / F + 1) / 51)$. The total contamination referred to the fuel from all sources is determined from the equation:

$$(A / F)\, X_a + (W / F)\, X_w + X_f = \text{Contamination (ppmw), all sources, referred to the fuel,}$$

where A, W, F are air, water and fuel flows (lbs/sec), respective; and X_a, X_w, X_f are air, water and fuel contaminant concentrations (ppmw), respectively.

Figure 1. Limiting Carry-Over for Minimizing Turbine Hot Corrosion

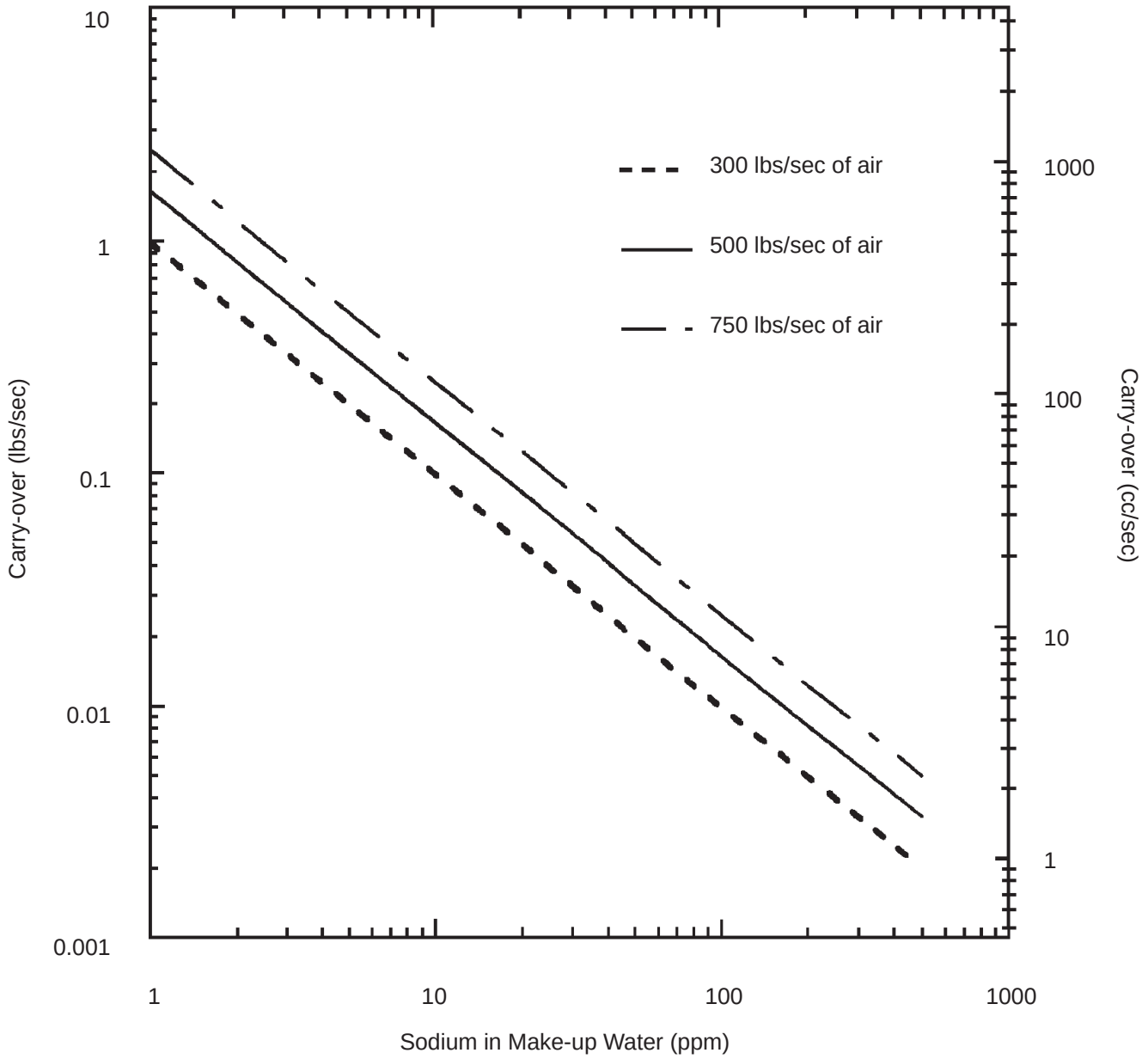

GE Power Systems

General Electric Company
One River Road, Schenectady, NY 12345
518 • 385 • 2211 TX: 145354

N° PLANO: AGM-02-0204-PLA-E-0001 | 0

NOTES.

1. STRUCTURAL WELDS ARE PER P8A–AG1, FIGURE PER APPENDIX II, FILLER METAL COLUMN AB PER APPENDIX I.
2. GENERAL CONDUIT APPLIED PRACTICES ARE PER 287A1300.
3. ALL CONDUIT PARTS AND SUPPORTS ARE ACCUMULATED WITH RUN CALLOUTS XXX–XXX , DEVICES XXXX, AND JUNCTION BOXES JBXXX. ITEM NUMBERS LOCATED INDIVIDUALLY (XXXX) ARE FOR REFERENCE AND ARE NOT ACCUMULATED ON THE BILL OF MATERIAL.
4. SPECIFICATIONS AND COMPLIMENTARY DOCUMENTS ARE PROVIDED BY CUSTOMER AS PART OF THE ORIGINAL UNIT DOCUMENTATION

ALL DIMENSIONS IN BRACKETS [ ] ARE MILLIMETER; EXPRESSED DIMENSIONS ARE INCHES

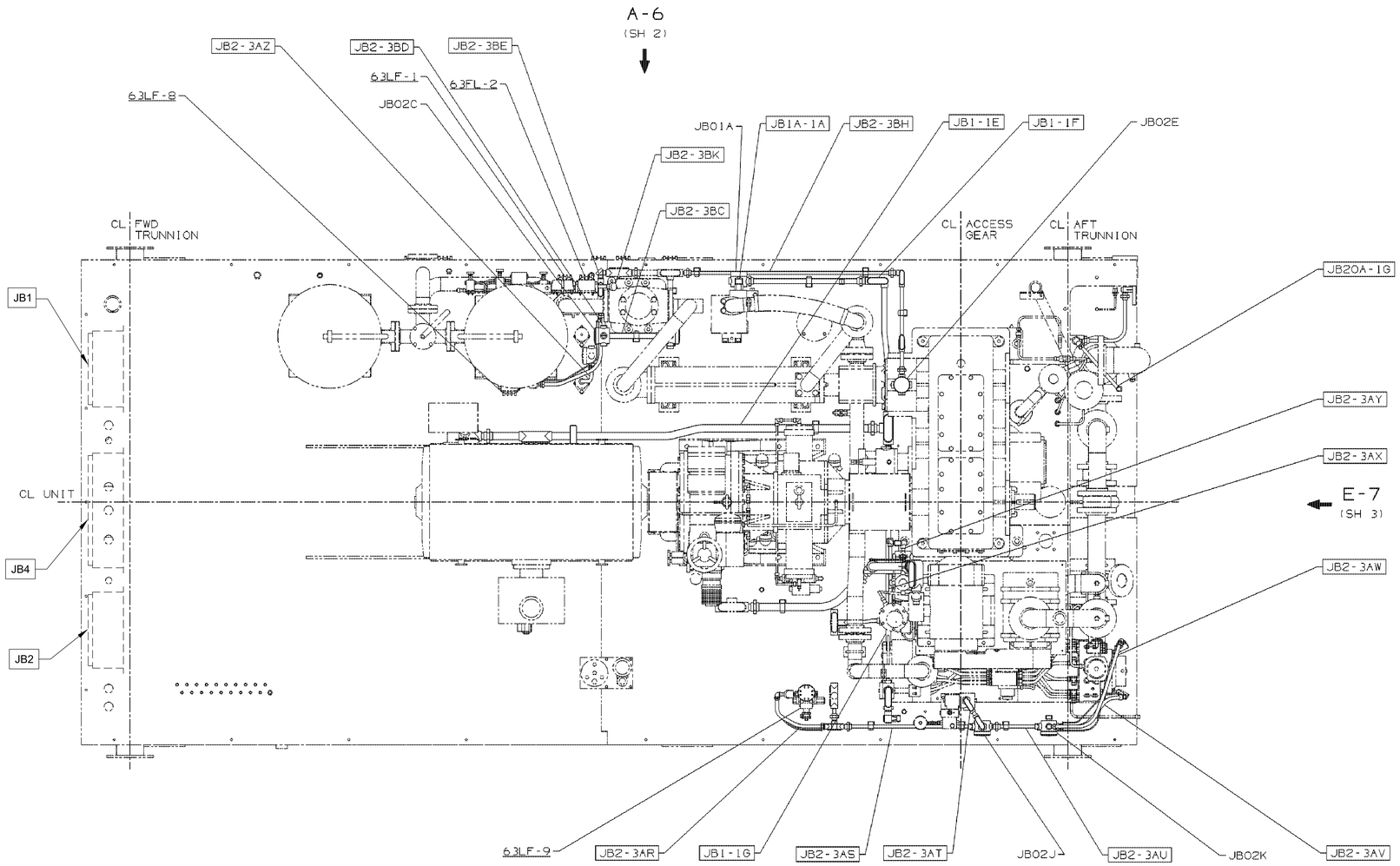

0.	07/07/11	ISSUED FOR CONSTRUCTION	SAB	CB	TK
REV.	FECHA	REVISIONES O MODIFICACIONES	DIBUJO	REVISO	APROBO

REF. FABRICANTE		
REF. FABRICANTE	FABRICANTE	O/C:

N° DE DOCUMENTO	DESCRIPCIÓN	REV.	FECHA
AGM-02-0204-PLA-E-0058	INTERCONNECTION WIRING DIAGRAM		
287A1300	CONDUIT GENERAL PRACTICES		
P8A—AG1	WELDING – GENERAL SPEC		

DOCUMENTOS DE REFERENCIA

DERWICK | ProEnergy | CORPOELEC | La Electricidad de Caracas | SENECA

AMPLIACIÓN DE LA CAPACIDAD DE GENERACIÓN Y TRANSPORTE DE ELECTRICIDAD EN LA ISLA DE MARGARITA

PLANO N°: | REV: 0

CONDUIT ARRANGEMENT – LIQUID FUEL
DUAL FUEL MOD. UNITS 298034 & 298035
(MLI 0165B)

PROYECTO N°: 409–2956–1

CALCULO:	PROYECTO:	ESCALA: NONE	PLANO No:
REVISADO: C. Brown	CALCULO:	FECHA: 07/07/11	AGM–02–0204–PLA–E–0001
DIBUJO: S. Boerckel	REVISADO: J. Castillo	DISK. N°	
APROBADO: T. Koontz	DIBUJO:	ESC./PLOTED:	
ARCHIVO:	APROBADO: M. Montbeck	ARCHIVO:	PAGINA: 1 DE: 5 — REV: 0

F_AO_11 – 1189x841mm

N° PLANO: AGM-02-0204-PLA-E-0001 | 0

IMPORTANTE
ESTE PLANO FUE ELABORADO EN AUTOCAD V.2008
CUALQUIER MODIFICACIÓN REALIZADA EN CAMPO DEBERA SER NOTIFICADO A LA UNIDAD RESPONSABLE.
QUEDA PROHIBIDO CORREGIR ESTE PLANO SIN AUTORIZACION DE ESTA UNIDAD.

ALL DIMENSIONS IN BRACKETS [ ] ARE MILLIMETER EXPRESSED DIMENSIONS ARE INCHES

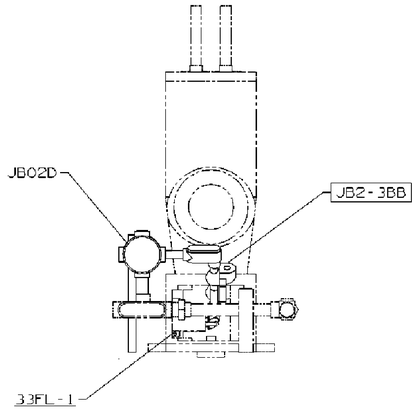

VIEW F-7

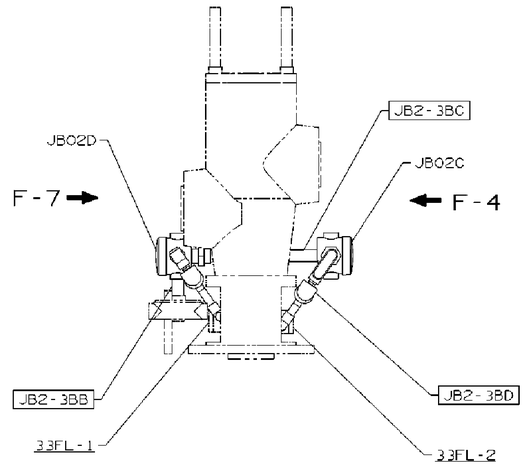

DETAIL F-5

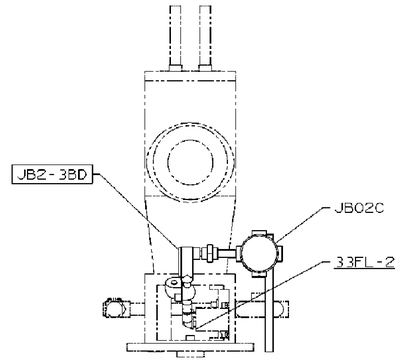

VIEW F-4

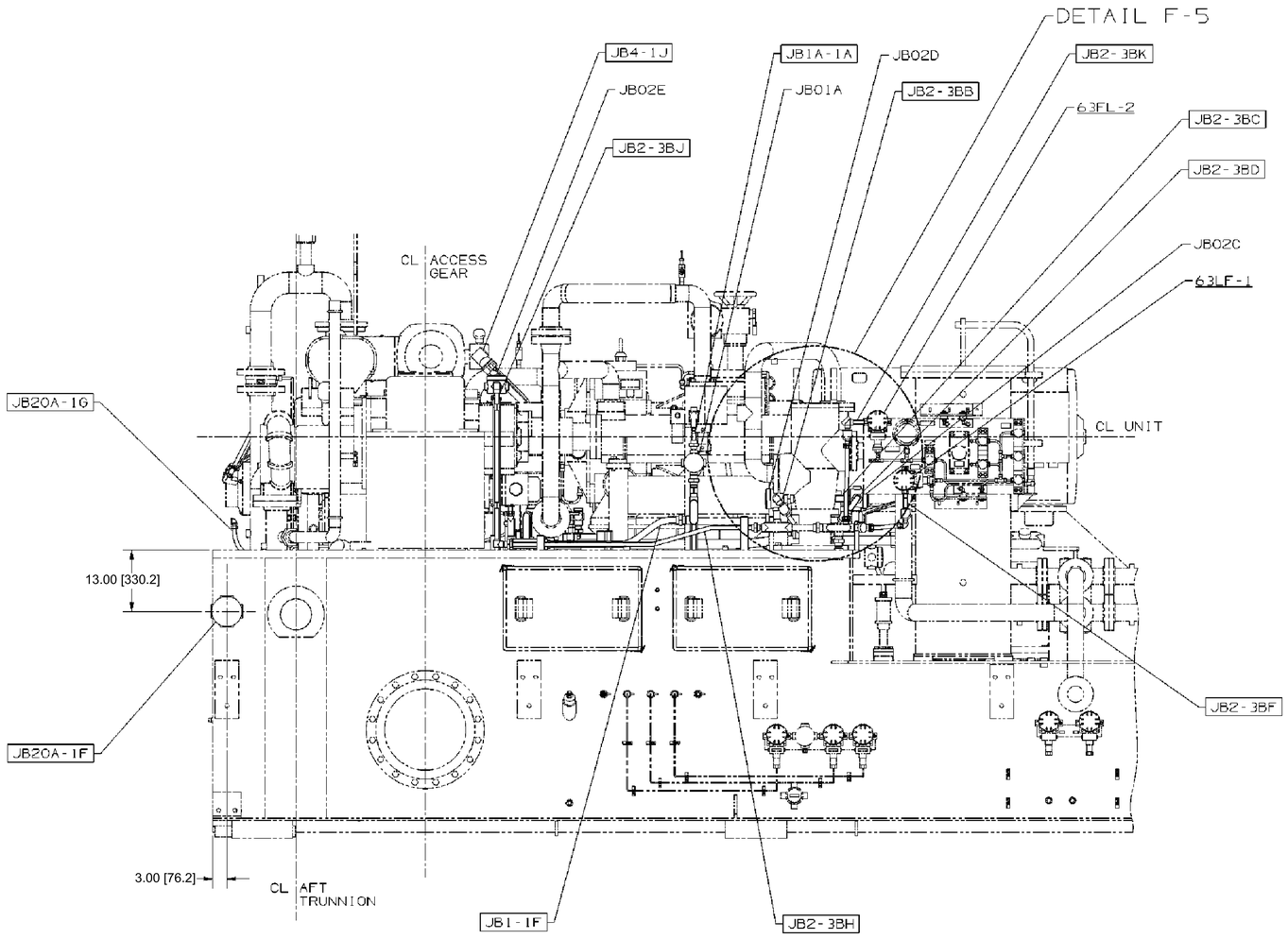

VIEW A-6 (SH 1)
(ROTATED 180°)

REV.	FECHA	REVISIONES O MODIFICACIONES	DIBUJO	REVISO	APROBO
0.	07/07/11	ISSUED FOR CONSTRUCTION	SAB	CB	TK

REF. FABRICANTE		
REF. FABRICANTE	FABRICANTE	O/C:

N° DE DOCUMENTO	DESCRIPCIÓN	REV.	FECHA
AGM-02-0204-PLA-E-0058	INTERCONNECTION WIRING DIAGRAM		
287A1300	CONDUIT GENERAL PRACTICES		
PSA-AG-1	WELDING – GENERAL SPEC		

DOCUMENTOS DE REFERENCIA

DERWICK | ProEnergy SERVICES | CORPOELEC | Universidad Del Caribe | SENSICA

AMPLIACIÓN DE LA CAPACIDAD DE GENERACIÓN Y TRANSPORTE DE ELECTRICIDAD EN LA ISLA DE MARGARITA

PLANO N°: | REV:
PROYECTO N°: 409-2956-1

CONDUIT ARRANGEMENT – LIQUID FUEL
DUAL FUEL MOD. UNITS 298034 & 298035
(MLI 0165B)

CALCULO:	PROYECTO:	ESCALA: NONE	PLANO No:
REVISADO: C. Brown	CALCULO:	FECHA: 07/07/11	AGM-02-0204-PLA-E-0001
DIBUJO: S. Boerckel	REVISADO: J. Castillo	DISK. N°:	
APROBADO: T. Koontz	DIBUJO:	ESC./PLOTEO:	
ARCHIVO:	APROBADO: M. Monticelli	ARCHIVO:	PAGINA: 2 DE: 5 — REV.: 0

F_AO_11 – 1189x841mm

LINEA DE CORTE DE ORIGINAL
LINEA DE CORTE DE COPIA

N° PLANO: AGM-02-0204-PLA-E-0001 | 0

IMPORTANTE
ESTE PLANO FUE ELABORADO EN AUTOCAD V.2008
CUALQUIER MODIFICACIÓN REALIZADA EN CAMPO DEBERA SER NOTIFICADO A LA UNIDAD RESPONSABLE.
QUEDA PROHIBIDO CORREGIR ESTE PLANO SIN AUTORIZACION DE ESTA UNIDAD.

ALL DIMENSIONS IN BRACKETS [ ] ARE MILLIMETER; EXPRESSED DIMENSIONS ARE INCHES

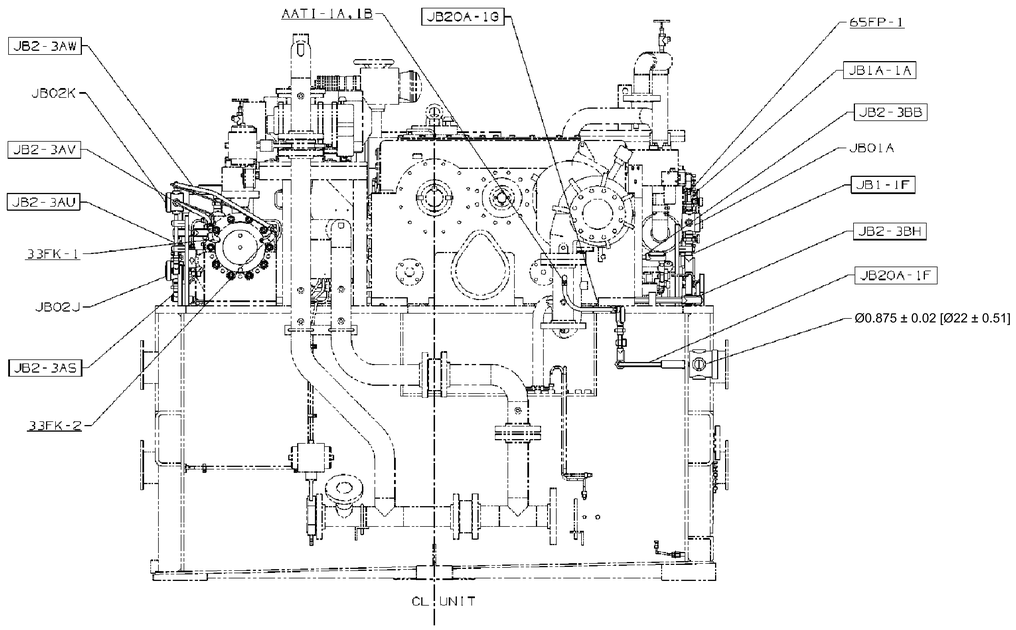

VIEW E-7 (SH 1)

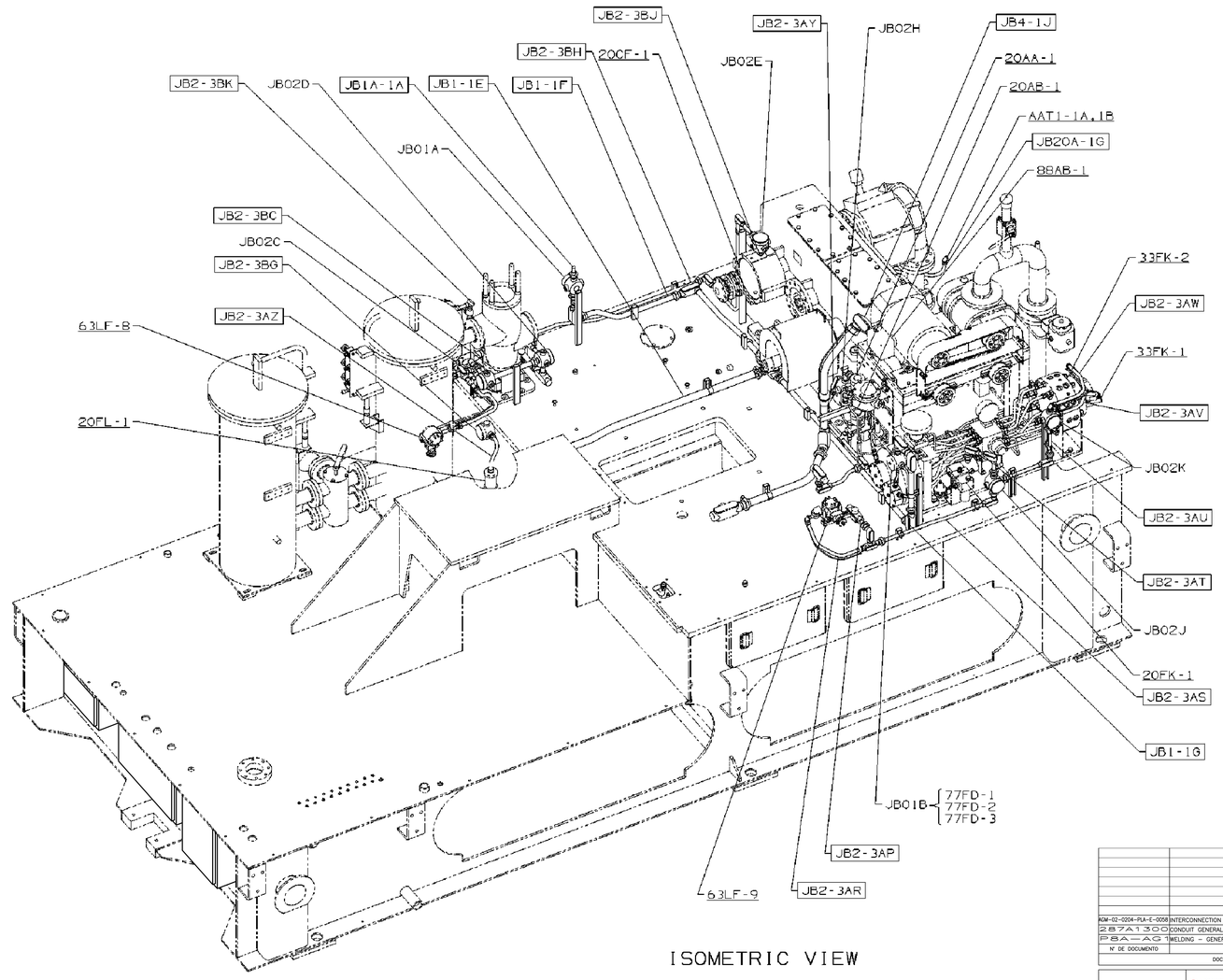

ISOMETRIC VIEW

REV.	FECHA	REVISIONES O MODIFICACIONES	DIBUJO	REVISO	APROBO
0	07/07/11	ISSUED FOR CONSTRUCTION	SAB	CB	TK

REF. FABRICANTE		
REF. FABRICANTE	FABRICANTE	O/C:

N° DE DOCUMENTO	DESCRIPCIÓN	REV.	FECHA
AGM-02-0204-PLA-E-0058	INTERCONNECTION WIRING DIAGRAM		
287A1300	CONDUIT GENERAL PRACTICES		
PBA-AG 1	WELDING – GENERAL SPEC		

DOCUMENTOS DE REFERENCIA

DERWICK | ProEnergy SERVICES | CORPOELEC | Universidad de Carabobo | SENECA

AMPLIACIÓN DE LA CAPACIDAD DE GENERACIÓN Y TRANSPORTE DE ELECTRICIDAD EN LA ISLA DE MARGARITA

PLANO N°: | REV:
PROYECTO N°: 409-2956-1

CONDUIT ARRANGEMENT – LIQUID FUEL
DUAL FUEL MOD. UNITS 298034 & 298035
(MLI 0165B)

CALCULO:	PROYECTO:	ESCALA: NONE	PLANO No:
REVISADO: C. Brown	CALCULO:	FECHA: 07/07/11	AGM-02-0204-PLA-E-0001
DIBUJO: S. Boerckel	REVISADO: J. Castillo	DISE. N°:	
APROBADO: T. Koontz	DIBUJO:	ESC./PLOTEO:	
ARCHIVO:	APROBADO: M. Monticelli	ARCHIVO:	PAGINA: 3 DE: 5 — REV: 0

F_AO_11 – 1189x841mm

LINEA DE CORTE DE COPIA
LINEA DE CORTE DE ORIGINAL

N° PLANO: AGM-02-0204-PLA-E-0001 | 0

ALL DIMENSIONS IN BRACKETS [ ] ARE MILLIMETER; EXPRESSED DIMENSIONS ARE INCHES

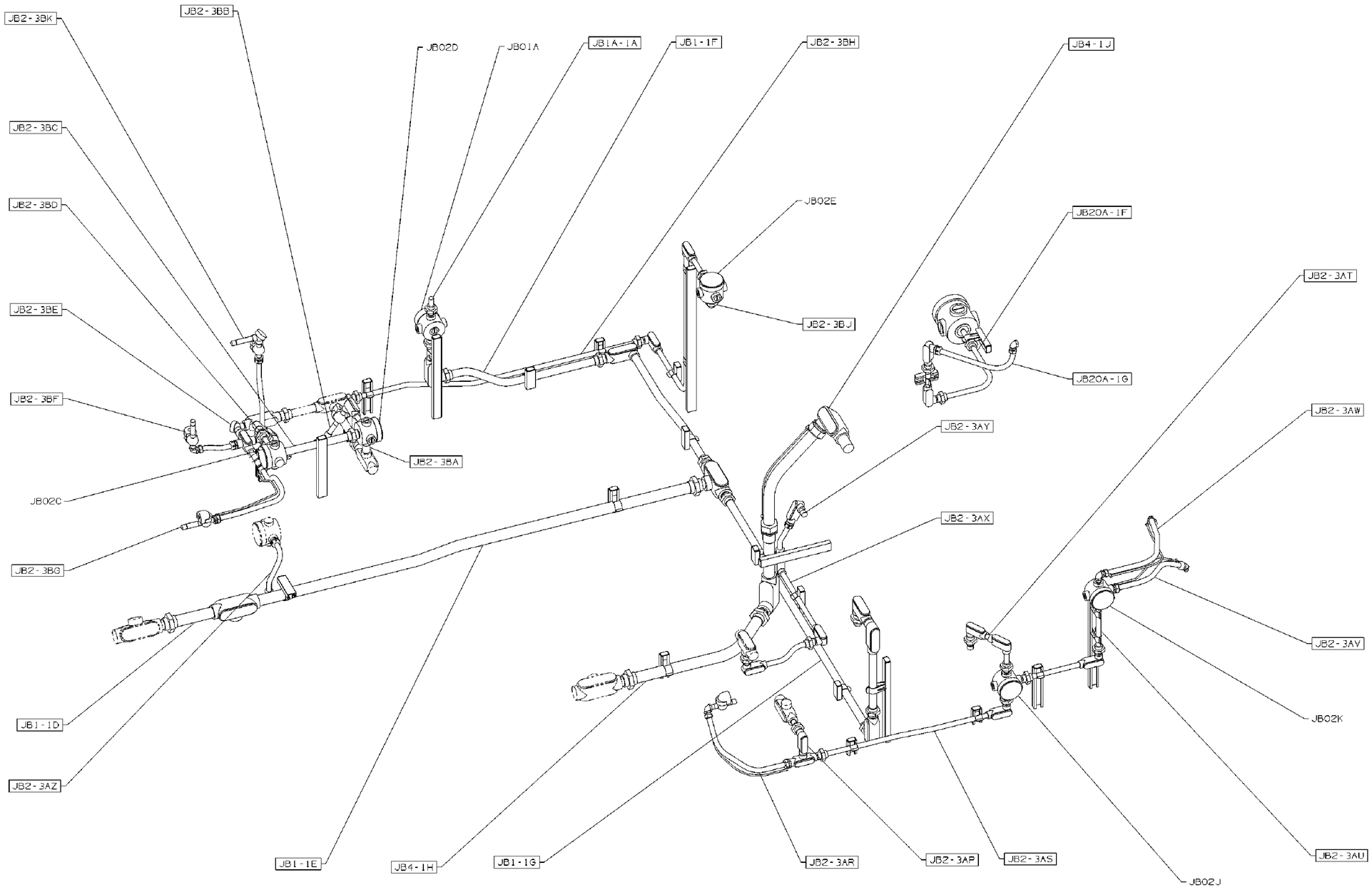

ISOMETRIC VIEW

(BACKGROUNDS REMOVED FOR CLARITY)

REV.	FECHA	REVISIONES O MODIFICACIONES	DIBUJO	REVISO	APROBO
0.	07/07/11	ISSUED FOR CONSTRUCTION	SAB	CB	TK

REF. FABRICANTE		
REF. FABRICANTE	FABRICANTE	O/C:

N° DE DOCUMENTO	DESCRIPCIÓN	REV.	FECHA
AGM-02-0204-PLA-E-0058	INTERCONNECTION WIRING DIAGRAM		
28TA130	CONDUIT GENERAL PRACTICES		
PBA-AG1	WELDING - GENERAL SPEC		

DOCUMENTOS DE REFERENCIA

DERWICK Venezuela Associates Corp. | ProEnergy Services | CORPOELEC Corporación Venezolana de Electricidad | La Electricidad de Caracas | SENECA Ingeniería Funcional de Ingeniería y Proyectos

AMPLIACIÓN DE LA CAPACIDAD DE GENERACIÓN Y TRANSPORTE DE ELECTRICIDAD EN LA ISLA DE MARGARITA

PLANO N°: | REV:

CONDUIT ARRANGEMENT – LIQUID FUEL
DUAL FUEL MOD. UNITS 298034 & 298035
(MLI 0165B)

PROYECTO N°: 409-2956-1

CALCULO:	PROYECTO:	ESCALA: NONE	PLANO N°:
REVISADO: C. Brown	CALCULO:	FECHA: 07/07/11	AGM-02-0204-PLA-E-0001
DIBUJO: S. Boerckel	REVISADO: J. Castillo	DISK. N°:	
APROBADO: T. Koontz	DIBUJO:	ESC./PLOTEO:	
ARCHIVO:	APROBADO: M. Monticelli	ARCHIVO:	PAGINA: 4 DE: 5 — REV.: 0

F_AD_11 – 1189x841mm

N° PLANO: AGM-02-0204-PLA-E-0001 0

I M P O R T A N T E
ESTE PLANO FUE ELABORADO EN AUTOCAD V.2008
CUALQUIER MODIFICACIÓN QUE SEA EN CAMPO DEBERA SER NOTIFICADO A LA UNIDAD RESPONSABLE.
QUEDA PROHIBIDO CORREGIR ESTE PLANO SIN AUTORIZACION DE ESTA UNIDAD.

ALL DIMENSIONS IN BRACKETS [ ] ARE MILLIMETER; EXPRESSED DIMENSIONS ARE INCHES

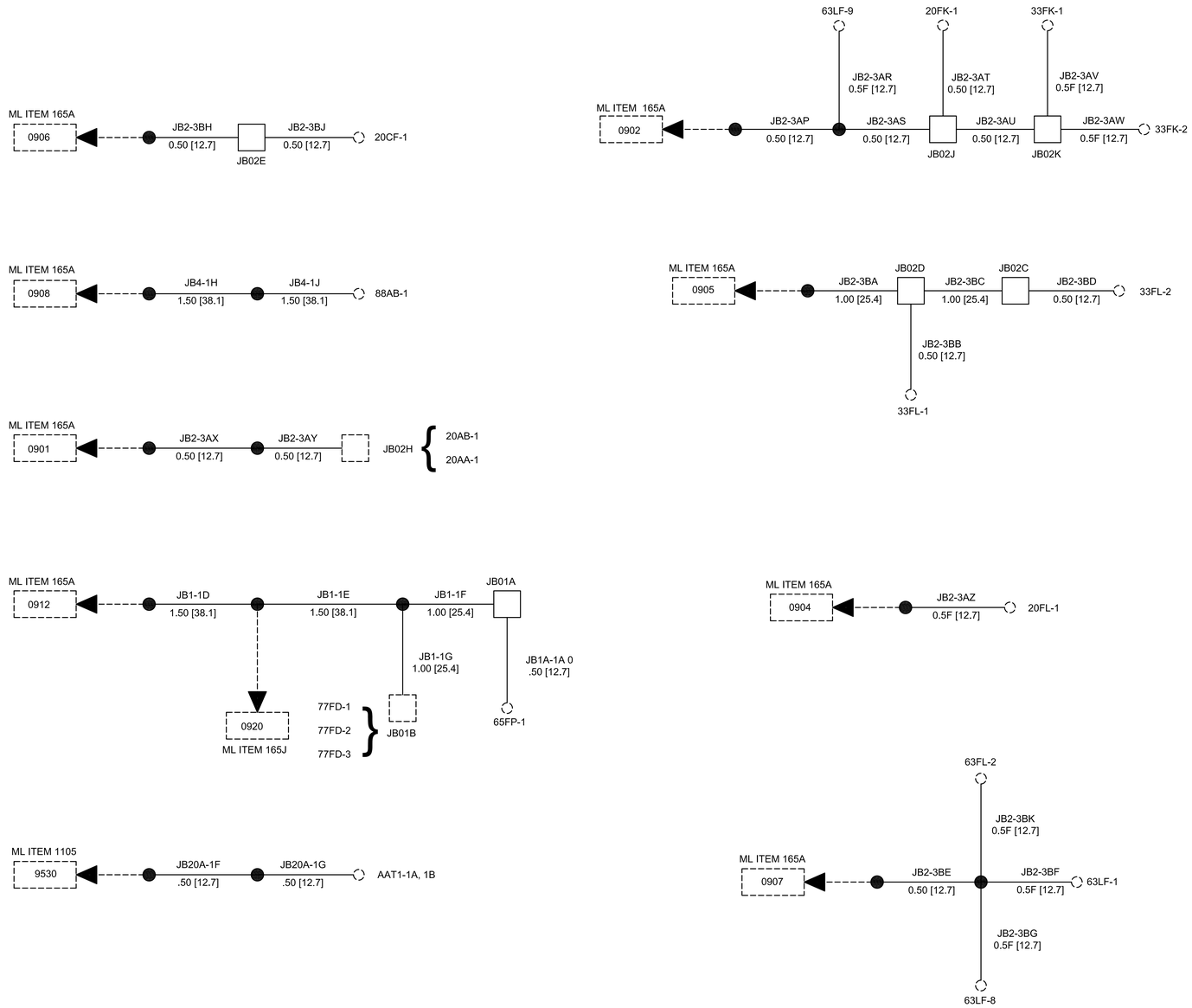

CONDUIT SCHEMATICS

REV.	FECHA	REVISIONES O MODIFICACIONES	DIBUJO	REVISO	APROBO
0	07/07/11	ISSUED FOR CONSTRUCTION	SAB	CB	TK

REF. FABRICANTE		
REF. FABRICANTE	FABRICANTE	O/C:

N° DE DOCUMENTO	DESCRIPCIÓN	REV.	FECHA
AGM-02-0204-PLA-E-0058	INTERCONNECTION WIRING DIAGRAM		
287A1300	CONDUIT GENERAL PRACTICES		
PA-A-C1	WELDING – GENERAL SPEC		

DOCUMENTOS DE REFERENCIA

DERWICK · ProEnergy · CORPOELEC · La Electricidad de Caracas · SENSICA

AMPLIACIÓN DE LA CAPACIDAD DE GENERACIÓN Y TRANSPORTE DE ELECTRICIDAD EN LA ISLA DE MARGARITA

PLANO N°: REV:
PROYECTO N°: 409-2956-1

CONDUIT ARRANGEMENT – LIQUID FUEL
DUAL FUEL MOD. UNITS 298034 & 298035
(MLI 0165B)

CALCULO:	PROYECTO:	ESCALA: NONE	PLANO No:
REVISADO: C. Brown	CALCULO:	FECHA: 07/07/11	AGM-02-0204-PLA-E-0001
DIBUJO: S. Boerckel	REVISADO: J. Castillo	DISK. N°:	
APROBADO: T. Koontz	DIBUJO:	ESC./PLOTEO:	REV: 0
ARCHIVO:	APROBADO: M. Monticelli	ARCHIVO:	PAGINA: 5 DE: 5

F_AO_11 – 1189x841mm

N° PLANO: AGM-02-0204-PLA-E-0002 0

NOTES:

1. SEE AGM-02-0204-PLA-E-0006 (CABLE SUMMARY), MLI 0463, FOR APPLICABLE CABLES AND DEFINITION.
2. ALL CONNECTIONS TO TURBINE BASE AND TO GENERAL ELECTRIC COMPANY FURNISHED DEVICES, MUST CONFORM TO ALL APPLICABLE LOCAL AND NATI0NAL ELECTRIC CODES.
3. SEE MECHANICAL OUTLINE, ML ITEM 0306, FOR COMPARTMENT OUTLINE DIMENSIONS AND ORIENTATIONS.
4. ALL DIMENSIONS ARE NOMINAL. ALL DIMENSIONS ARE IN FEET AND INCHES, UNLESS OTHERWISE SPECIFIED. [ ] ARE IN MM.
5. FOR HARDWIRED CABLES, IT IS INSTALLERS RESPONSIBILITY TO SUPPLY CORD GRIPS AND TERMINALS WHERE NEEDED.
6. TABULATED DEVICE OPENINGS ARE ACTUAL OPENINGS. REDUCERS AND ENLARGERS MAY BE USED BY PURCHASER AS REQUIRED.
7. GE SUPPLIED CABLES ARE SUPPLIED ON ML ITEM A061. SEE AGM-02-0204-PLA-E-0006 (CABLE SUMMARY) MLI 0463 FOR DEFINITION.
8. ROUTING FROM CUSTOMER'S CONTROL / POWER EQUIP NOT INCLUDED.
9. SEE FOUNDATION INTERFACE OUTLINE, ML ITEM 0323, FOR SUGGESTED CONDUIT EMBEDMENTS AND ROUTING.
10. SYSTEM PARAMETERS AND SPECIFICATIONS ARE BASED ON GE DRAWING 196D4463 (PROVIDED BY CUSTOMER). INCLUDING REQUIREMENTS FOR DUAL FUEL SYSTEMS PER CUSTOMER SCOPE OF WORK. (0)

ALL DIMENSIONS IN BRACKETS [ ] ARE MILLIMETER; EXPRESSED DIMENSIONS ARE INCHES

88BT-1	1	OUTLINE, VENT FAN-ENCLOSURE	111E8048P004
DEVICE	IT.	NOMENCLATURE	IDENT
LIST OF COMPLEMENTARY DOCUMENTS			

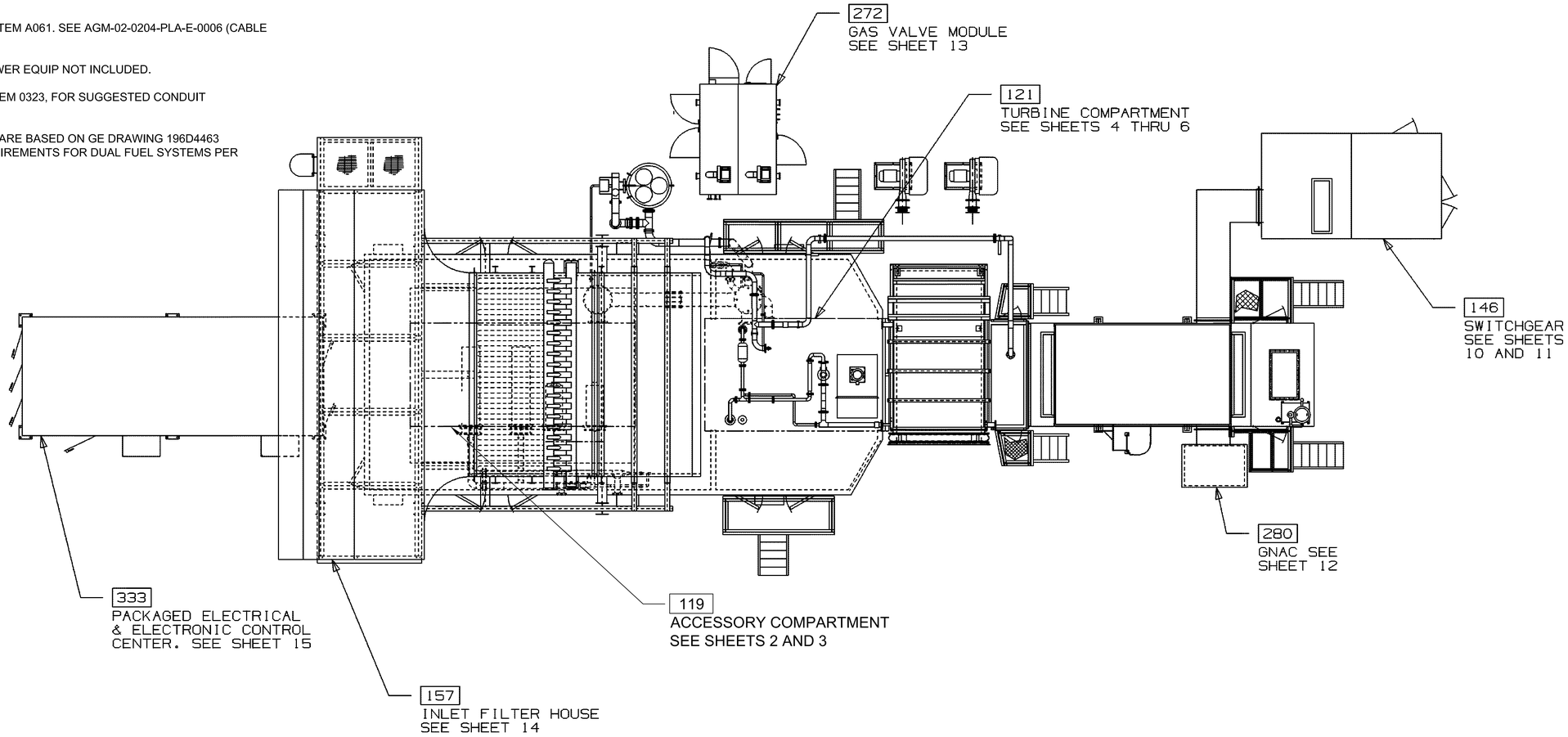

DRAWING INFORMATION LOCATION

SEE NOTES ABOVE

DOWNSTREAM

WATER INJECTION SKID (SUPPLIED BY DERWICK)
(ACCESS DOOR TO FACE AS SHOWN)
FOR LOCATION REFER TO AGM-02-0204-PLA-G-0057
ELEVATION OF SKID BASE SHOULD BE SAME AS MACHINE BASE LINE
FOR CONNECTIONS REFER TO SHEET 16 OR AGM-02-0204-PLA-M-0041

WATER INJECTION SKID

F-8
SH. 16

REV.	FECHA	REVISIONES O MODIFICACIONES	DIBUJO	REVISO	APROBO
0	06/07/11	ISSUED FOR CONSTRUCTION, SEE NOTE 10	SAB	CB	TK

REF. FABRICANTE		
REF. FABRICANTE	FABRICANTE	O/C:

N° DE DOCUMENTO	DESCRIPCIÓN	REV.	FECHA
AGM-02-0204-PLA-E-0006	CABLE SUMMARY		
AGM-02-0204-PLA-M-0041	WATER INJECTION SKID – GENRAL ARRANGEMENT		
AGM-02-0204-PLA-G-0057	PLOT PLAN	0	16/06/11

DOCUMENTOS DE REFERENCIA

DERWICK ProEnergy CORPOELEC La Electricidad de Caracas SENECA

AMPLIACIÓN DE LA CAPACIDAD DE GENERACIÓN Y TRANSPORTE DE ELECTRICIDAD EN LA ISLA DE MARGARITA

OUTLINE – GT PACKAGE CONNECTION ELECTRICAL
DUAL FUEL MOD. UNITS 298034 & 298035
(MLI 0301)

PLANO N°:	REV:		
PROYECTO N°: 409-2956-1			
CALCULO:	PROYECTO:	ESCALA: NONE	PLANO No: AGM-02-0204-PLA-E-0002
REVISADO: C. Brown	CALCULO:	FECHA: 06/07/11	
DIBUJO: S. Boerckel	REVISADO: J. Castillo	DISK. N°	
APROBADO: T. Koontz	DIBUJO:	ESC./PLOTEO:	
ARCHIVO:	APROBADO: M. Monticelli	ARCHIVO:	PAGINA: 1 DE: 16 REV. 0

F_A1_11 – 841x594mm

N° PLANO: AGM-02-0204-PLA-E-0002 | 0

IMPORTANTE

ESTE PLANO FUE ELABORADO EN AUTOCAD V.2008
CUALQUIER MODIFICACION REALIZADA EN CAMPO DEBERA SER NOTIFICADO A LA UNIDAD RESPONSABLE.
QUEDA PROHIBIDO CORREGIR ESTE PLANO SIN AUTORIZACION DE ESTA UNIDAD.

ALL DIMENSIONS IN BRACKETS [ ] ARE MILLIMETER; EXPRESSED DIMENSIONS ARE INCHES

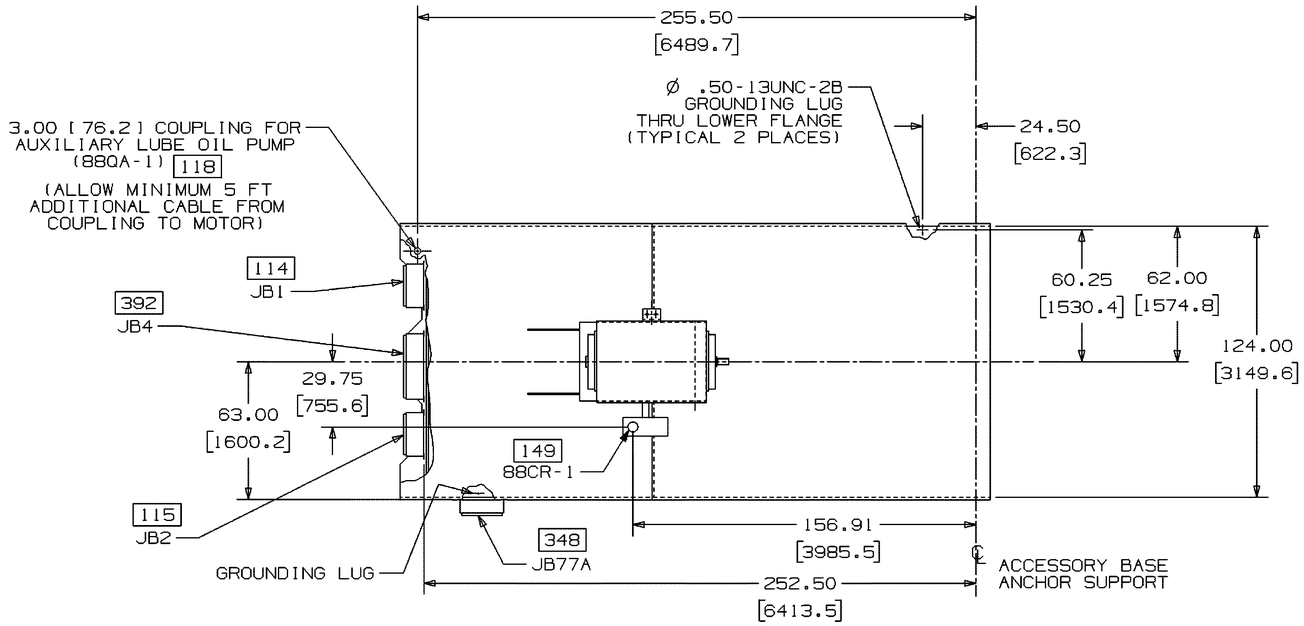

PLAN VIEW

FOR JUNCTION BOX DETAILS, SEE SHEET 3

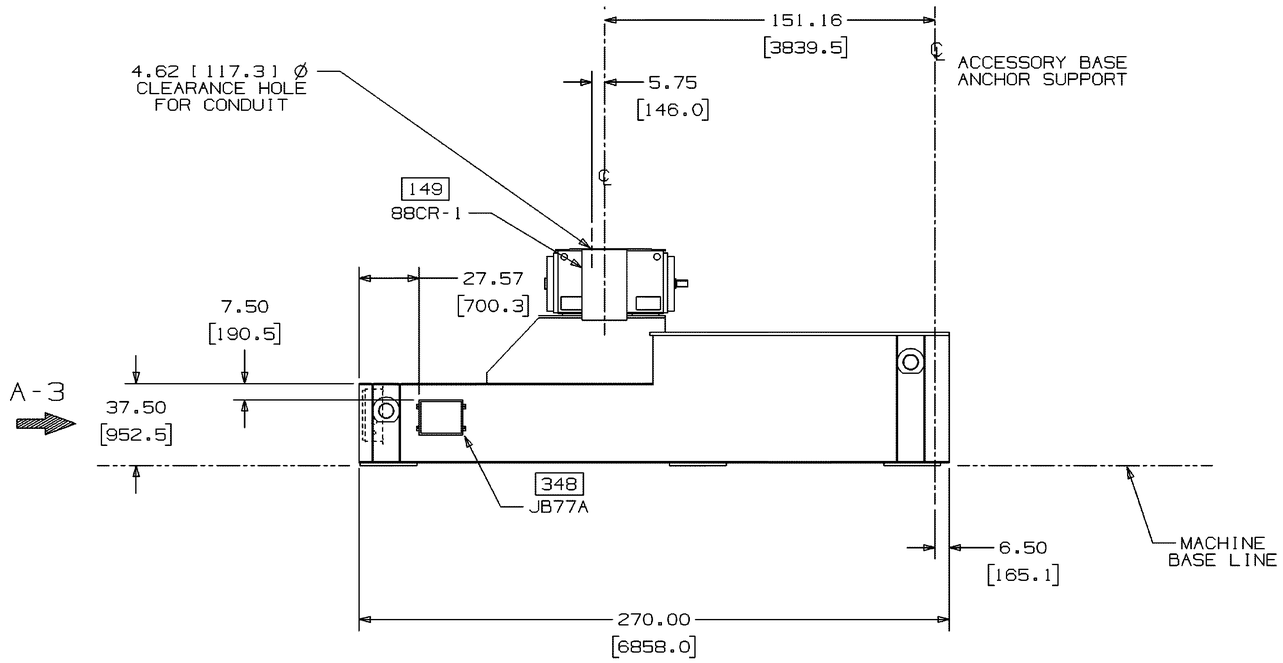

ELEVATION VIEW

RIGHT SIDE LOOKING DOWNSTREAM

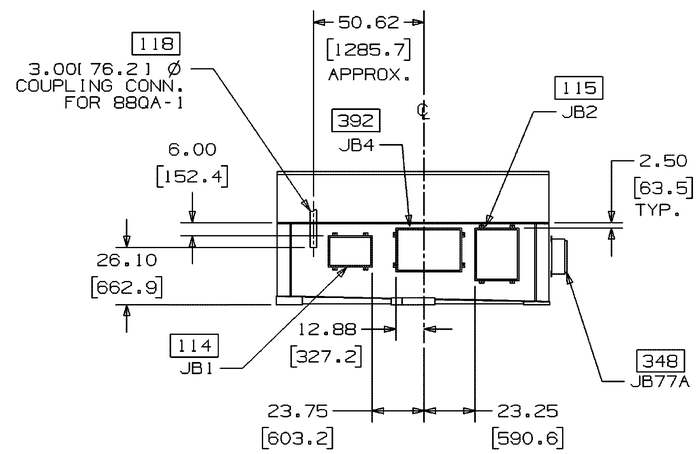

VIEW A-3

119 ACCESSORY COMPARTMENT

N° DE DOCUMENTO	DESCRIPCIÓN	REV.	FECHA
AGM-02-0204-PLA-E-0006	CABLE SUMMARY		
AGM-02-0204-PLA-M-0041	WATER INJECTION SKID – GENRAL ARRANGEMENT		
AGM-02-0204-PLA-G-0057	PLOT PLAN	0	16/06/11

DOCUMENTOS DE REFERENCIA

REV.	FECHA	REVISIONES O MODIFICACIONES	DIBUJO	REVISO	APROBO
0	06/07/11	ISSUED FOR CONSTRUCTION, SEE NOTE 10 SHEET 1	SAB	CB	TK

REF. FABRICANTE		
REF. FABRICANTE	FABRICANTE	O/C:

DERWICK ASSOCIATES CORP. | ProEnergy SERVICES | CORPOELEC CORPORACIÓN ELÉCTRICA NACIONAL | La Electricidad de Caracas | GERENCIA FUNCIONAL DE INGENIERIA Y PROYECTOS | SENECA

AMPLIACIÓN DE LA CAPACIDAD DE GENERACIÓN Y TRANSPORTE DE ELECTRICIDAD EN LA ISLA DE MARGARITA

OUTLINE – GT PACKAGE CONNECTION ELECTRICAL
DUAL FUEL MOD. UNITS 298034 & 298035
(MLI 0301)

PLANO N°:	REV:		
PROYECTO N°: 409-2956-1			
CALCULO:	PROYECTO:	ESCALA: NONE	PLANO No: AGM-02-0204-PLA-E-0002
REVISADO: C. Brown	CALCULO:	FECHA: 06/07/11	
DIBUJO: S. Boerckel	REVISADO: J. Castillo	DISK. N°	
APROBADO: T. Koontz	DIBUJO:	ESC./PLOTEO:	REV. 0
ARCHIVO:	APROBADO: M. Monticelli	ARCHIVO:	PAGINA: 2 DE: 16

F_A1_11 – 841x594mm

N° PLANO: AGM-02-0204-PLA-E-0002 | 0

IMPORTANTE

ESTE PLANO FUE ELABORADO EN AUTOCAD V.2008
CUALQUIER MODIFICACION REALIZADA EN CAMPO DEBERA SER NOTIFICADO A LA UNIDAD RESPONSABLE.
QUEDA PROHIBIDO CORREGIR ESTE PLANO SIN AUTORIZACION DE ESTA UNIDAD.

ALL DIMENSIONS IN BRACKETS [ ] ARE MILLIMETER; EXPRESSED DIMENSIONS ARE INCHES

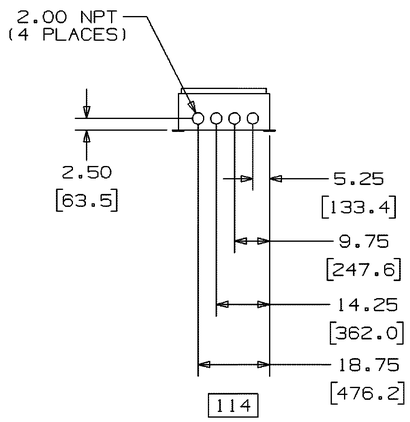

114

JB1
BOTTOM VIEW
24.00W X 16.00H X 7.16D
(OUTER BOX DIMENSIONS)

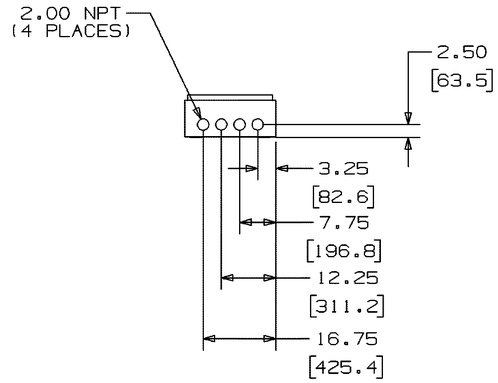

115

JB2
BOTTOM VIEW
20.00W X 24.00H X 9.16D
(OUTER BOX DIMENSIONS)

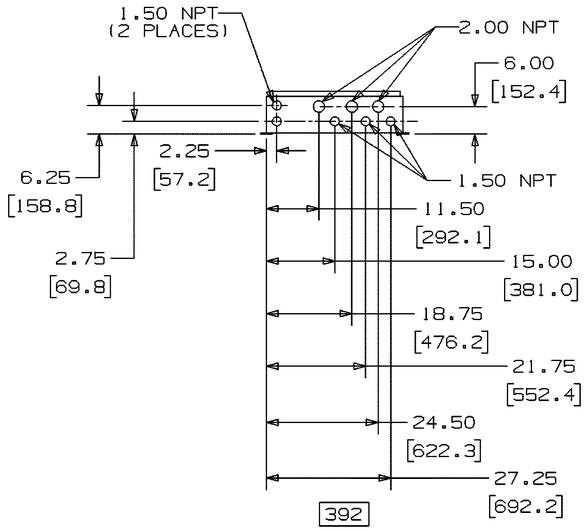

392

JB4
BOTTOM VIEW
30.00W X 20.00H X 9.35D
(OUTER BOX DIMENSIONS)

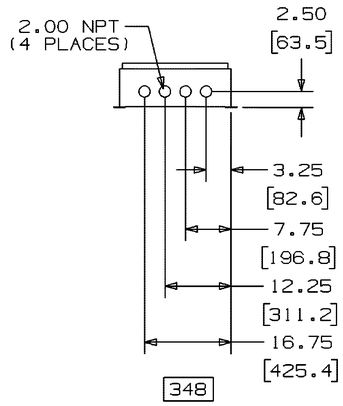

348

JB77A
BOTTOM VIEW
20.00W X 16.00H X 7.16D
(OUTER BOX DIMENSIONS)

119 ACCESSORY COMPARTMENT

N° DE DOCUMENTO	DESCRIPCIÓN	REV.	FECHA
AGM-02-0204-PLA-E-0006	CABLE SUMMARY		
AGM-02-0204-PLA-M-0041	WATER INJECTION SKID – GENRAL ARRANGEMENT		
AGM-02-0204-PLA-G-0057	PLOT PLAN	0	16/06/11

DOCUMENTOS DE REFERENCIA

REV.	FECHA	REVISIONES O MODIFICACIONES	DIBUJO	REVISO	APROBO
0	06/07/11	ISSUED FOR CONSTRUCTION, SEE NOTE 10 SHEET 1	SAB	CB	TK

REF. FABRICANTE		
REF. FABRICANTE	FABRICANTE	O/C:

DERWICK ASSOCIATES CORP. | ProEnergy SERVICES | CORPOELEC | La Electricidad de Caracas | GERENCIA FUNCIONAL DE INGENIERIA Y PROYECTOS | SENECA

AMPLIACIÓN DE LA CAPACIDAD DE GENERACIÓN Y TRANSPORTE DE ELECTRICIDAD EN LA ISLA DE MARGARITA

OUTLINE – GT PACKAGE CONNECTION ELECTRICAL
DUAL FUEL MOD. UNITS 298034 & 298035
(MLI 0301)

PLANO N°: | REV:
PROYECTO N°: 409-2956-1

CALCULO:	PROYECTO:	ESCALA: NONE	PLANO No: AGM-02-0204-PLA-E-0002
REVISADO: C. Brown	CALCULO:	FECHA: 06/07/11	
DIBUJO: S. Boerckel	REVISADO: J. Castillo	DISK. N°	
APROBADO: T. Koontz	DIBUJO:	ESC./PLOTEO:	REV. 0
ARCHIVO:	APROBADO: M. Monticelli	ARCHIVO:	PAGINA: 3 DE: 16

F_A1_11 – 841x594mm

N° PLANO: AGM-02-0204-PLA-E-0002 | 0

IMPORTANTE
ESTE PLANO FUE ELABORADO EN AUTOCAD V.2008
CUALQUIER MODIFICACION REALIZADA EN CAMPO DEBERA SER NOTIFICADO A LA UNIDAD RESPONSABLE.
QUEDA PROHIBIDO CORREGIR ESTE PLANO SIN AUTORIZACION DE ESTA UNIDAD.

ALL DIMENSIONS IN BRACKETS [ ] ARE MILLIMETER; EXPRESSED DIMENSIONS ARE INCHES

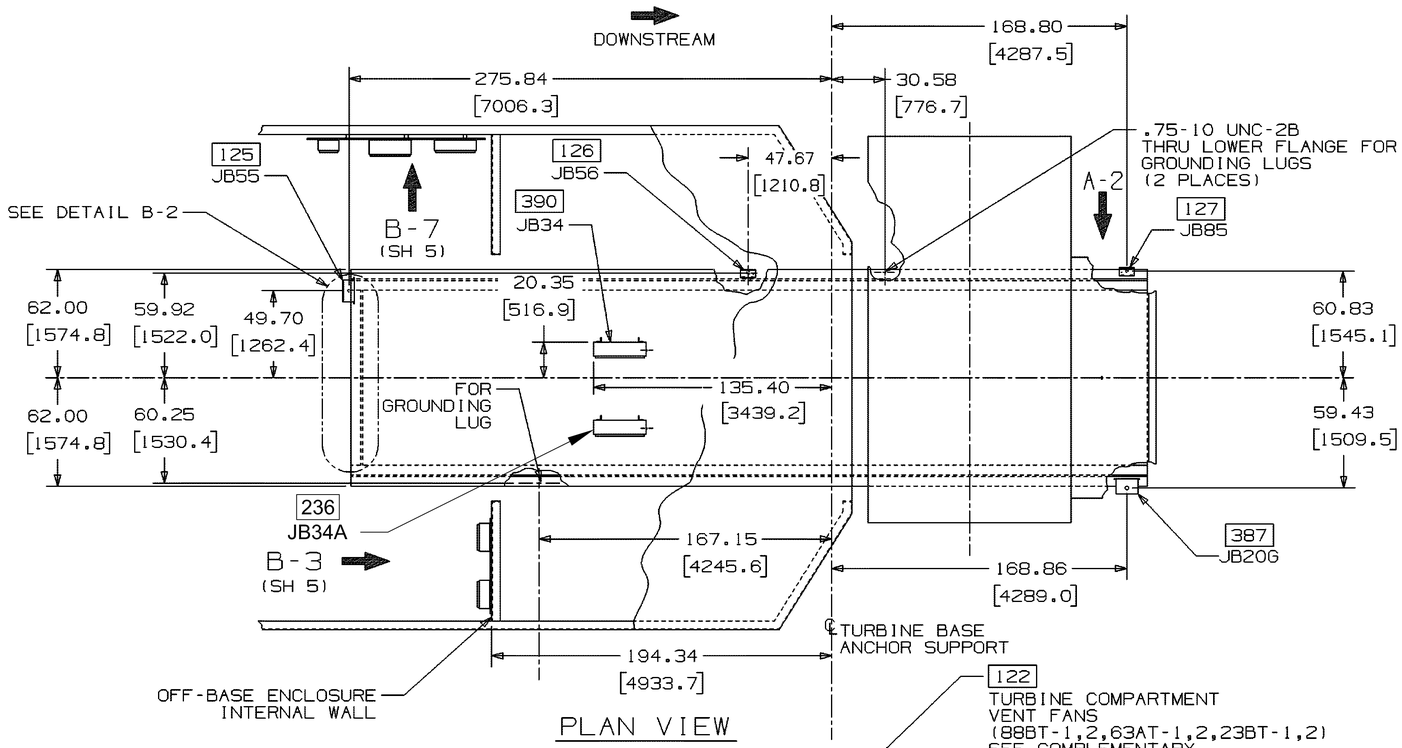

PLAN VIEW

FANS NOT SHOWN

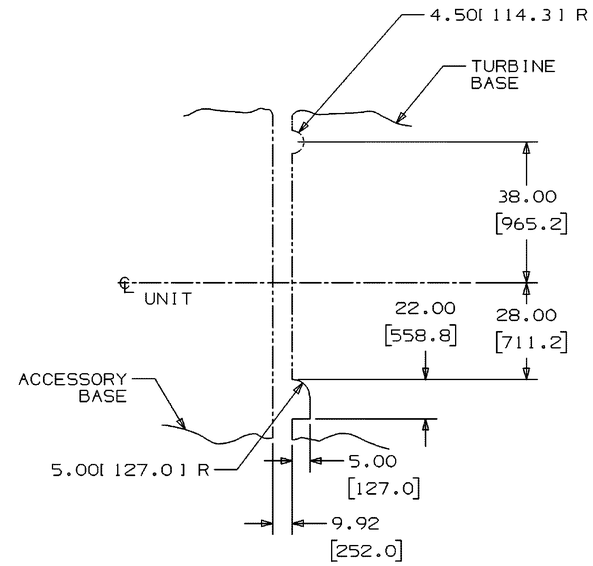

DETAIL B-2

VIEW SHOWING CONDUIT SPACE AVAILABLE BETWEEN BASES

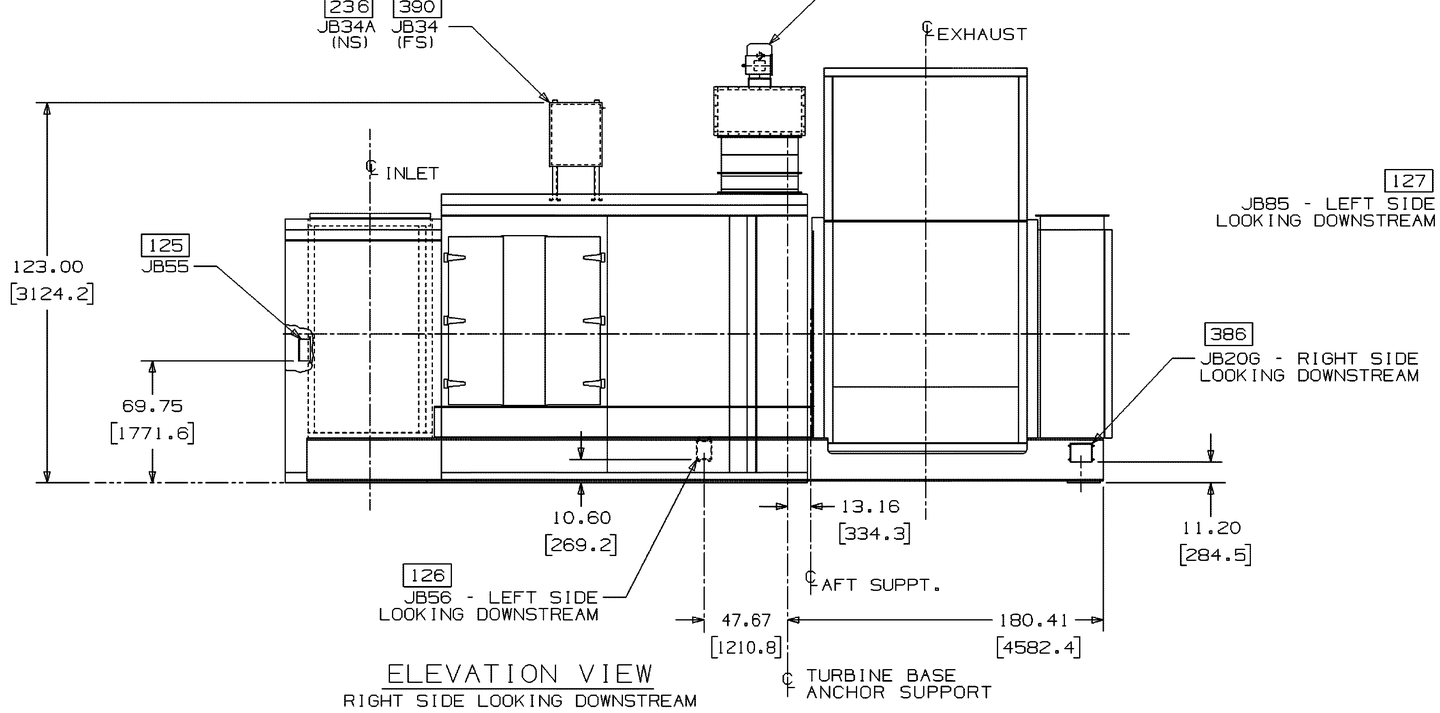

ELEVATION VIEW

RIGHT SIDE LOOKING DOWNSTREAM

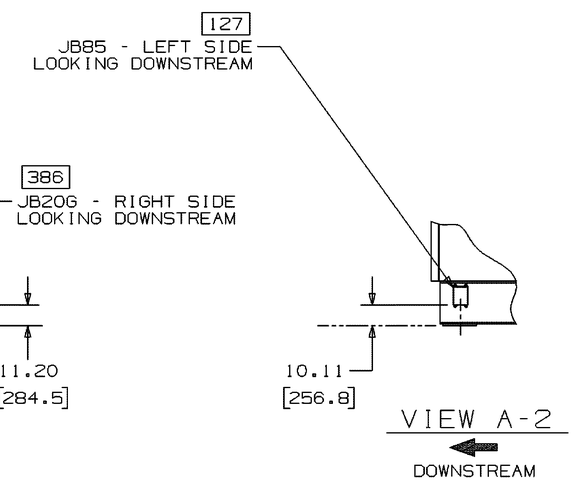

VIEW A-2

121 TURBINE COMPARTMENT

REV.	FECHA	REVISIONES O MODIFICACIONES	DIBUJO	REVISO	APROBO
0	06/07/11	ISSUED FOR CONSTRUCTION, SEE NOTE 10 SHEET 1	SAB	CB	TK

REF. FABRICANTE		
REF. FABRICANTE	FABRICANTE	O/C:

N° DE DOCUMENTO	DESCRIPCIÓN	REV.	FECHA
AGM-02-0204-PLA-E-0006	CABLE SUMMARY		
AGM-02-0204-PLA-M-0041	WATER INJECTION SKID - GENRAL ARRANGEMENT		
AGM-02-0204-PLA-G-0057	PLOT PLAN	0	16/06/11

DOCUMENTOS DE REFERENCIA

DERWICK | ProEnergy SERVICES | CORPOELEC | La Electricidad de Caracas | GERENCIA FUNCIONAL DE INGENIERIA Y PROYECTOS | SENECA

AMPLIACIÓN DE LA CAPACIDAD DE GENERACIÓN Y TRANSPORTE DE ELECTRICIDAD EN LA ISLA DE MARGARITA

OUTLINE - GT PACKAGE CONNECTION ELECTRICAL
DUAL FUEL MOD. UNITS 298034 & 298035
(MLI 0301)

PLANO N°:	REV:		
PROYECTO N°: 409-2956-1			
CALCULO:	PROYECTO:	ESCALA: NONE	PLANO No: AGM-02-0204-PLA-E-0002
REVISADO: C. Brown	CALCULO:	FECHA: 06/07/11	
DIBUJO: S. Boerckel	REVISADO: J. Castillo	DISK. N°	
APROBADO: T. Koontz	DIBUJO:	ESC./PLOTEO:	REV. 0
ARCHIVO:	APROBADO: M. Monticelli	ARCHIVO:	PAGINA: 4 DE: 16

F_A1_11 - 841x594mm

N° PLANO: AGM-02-0204-PLA-E-0002 0

IMPORTANTE

ESTE PLANO FUE ELABORADO EN AUTOCAD V.2008
CUALQUIER MODIFICACION REALIZADA EN CAMPO DEBERA SER NOTIFICADO A LA UNIDAD RESPONSABLE.
QUEDA PROHIBIDO CORREGIR ESTE PLANO SIN AUTORIZACION DE ESTA UNIDAD.

ALL DIMENSIONS IN BRACKETS [ ] ARE MILLIMETER; EXPRESSED DIMENSIONS ARE INCHES

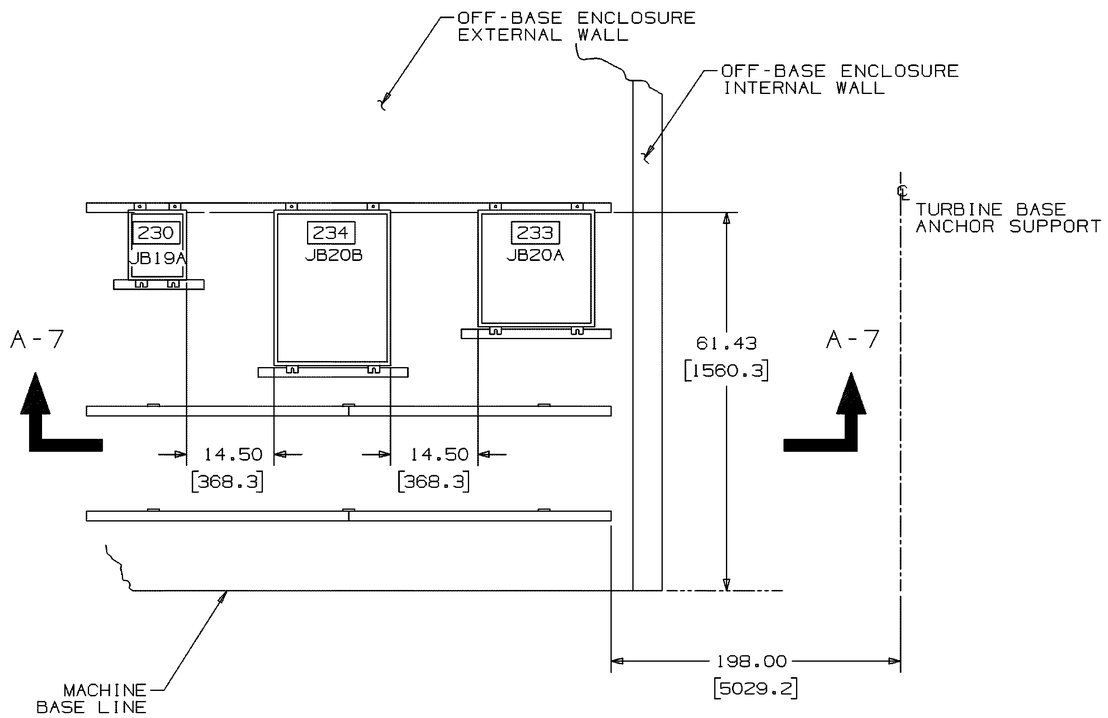

VIEW B-7 (SH 4)

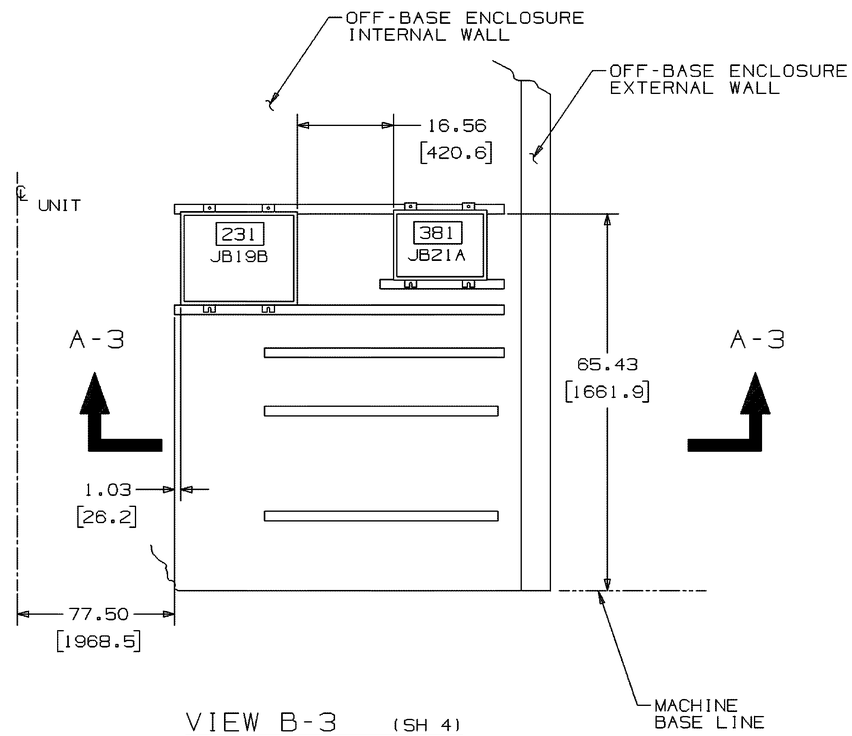

VIEW B-3 (SH 4)

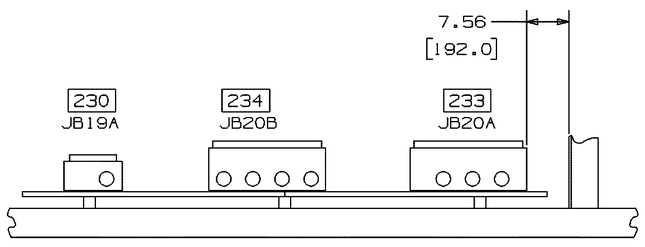

VIEW A-7

BOTTOM VIEW OF JUNCTION BOXES MOUNTED ON OFF-BASE ENCLOSURE EXTERNAL WALL. PARALLEL TO BASE LEFT SIDE LOOKING DOWNSTREAM

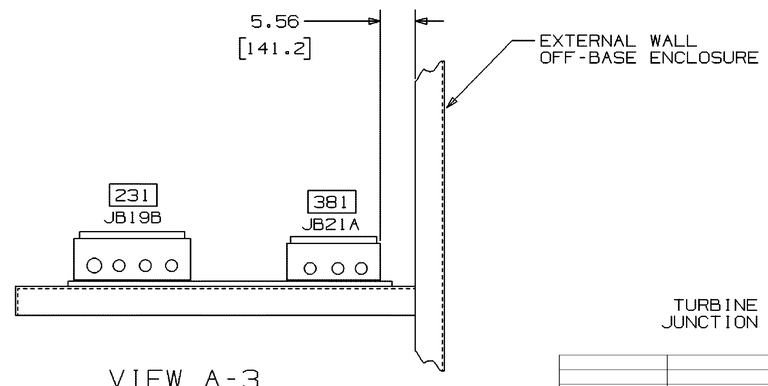

VIEW A-3

BOTTOM VIEW OF JUNCTION BOXES MOUNTED ON OFF-BASE ENCLOSURE INTERNAL WALL. PERPENDICULAR TO BASE RIGHT SIDE LOOKING DOWNSTREAM

TURBINE OFF BASE JUNCTION BOX RACKS

REV.	FECHA	REVISIONES O MODIFICACIONES	DIBUJO	REVISO	APROBO
0	06/07/11	ISSUED FOR CONSTRUCTION, SEE NOTE 10 SHEET 1	SAB	CB	TK

REF. FABRICANTE		
REF. FABRICANTE	FABRICANTE	O/C:

N° DE DOCUMENTO	DESCRIPCIÓN	REV.	FECHA
AGM-02-0204-PLA-E-0006	CABLE SUMMARY		
AGM-02-0204-PLA-M-0041	WATER INJECTION SKID – GENRAL ARRANGEMENT		
AGM-02-0204-PLA-G-0057	PLOT PLAN	0	16/06/11

DOCUMENTOS DE REFERENCIA

DERWICK ASSOCIATES CORP. / ProEnergy SERVICES / CORPOELEC / La Electricidad de Caracas / GERENCIA FUNCIONAL DE INGENIERIA Y PROYECTOS SENECA

AMPLIACIÓN DE LA CAPACIDAD DE GENERACIÓN Y TRANSPORTE DE ELECTRICIDAD EN LA ISLA DE MARGARITA

OUTLINE – GT PACKAGE CONNECTION ELECTRICAL DUAL FUEL MOD. UNITS 298034 & 298035 (MLI 0301)

PLANO N°: REV:

PROYECTO N°: 409-2956-1

CALCULO:	PROYECTO:	ESCALA: NONE	PLANO No: AGM-02-0204-PLA-E-0002
REVISADO: C. Brown	CALCULO:	FECHA: 06/07/11	
DIBUJO: S. Boerckel	REVISADO: J. Castillo	DISK. N°	
APROBADO: T. Koontz	DIBUJO:	ESC./PLOTEO:	REV. 0
ARCHIVO:	APROBADO: M. Monticelli	ARCHIVO:	PAGINA: 5 DE: 16

F_A1_11 – 841x594mm

N° PLANO: AGM-02-0204-PLA-E-0002 | 0

IMPORTANTE

ESTE PLANO FUE ELABORADO EN AUTOCAD V.2008
CUALQUIER MODIFICACION REALIZADA EN CAMPO DEBERA SER NOTIFICADO A LA UNIDAD RESPONSABLE.
QUEDA PROHIBIDO CORREGIR ESTE PLANO SIN AUTORIZACION DE ESTA UNIDAD.

ALL DIMENSIONS IN BRACKETS [ ] ARE MILLIMETER; EXPRESSED DIMENSIONS ARE INCHES

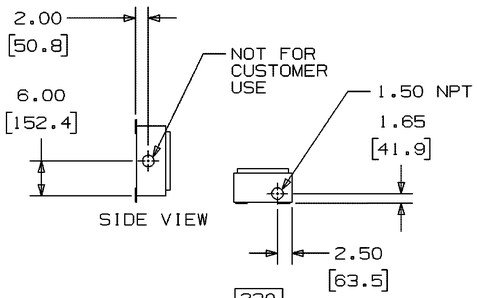

230

JB19A

BOTTOM VIEW
10.00W X 12.00H X 5.00D
FOR DETAILS SEE ML ITEM 1155

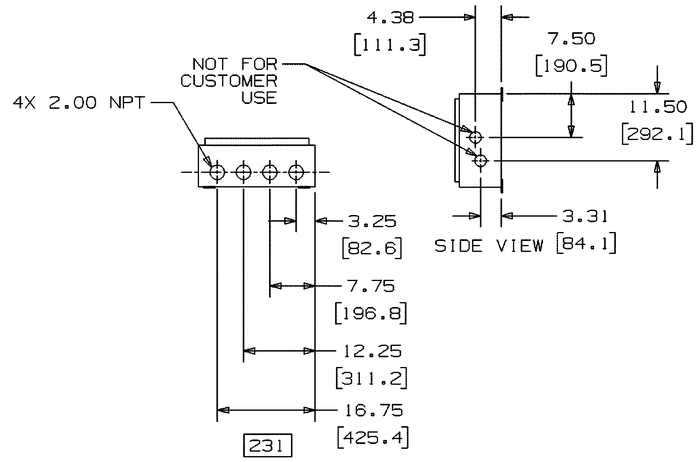

231

JB19B

BOTTOM VIEW
20.00W X 16.00H X 7.16D
FOR DETAILS SEE ML ITEM 1155

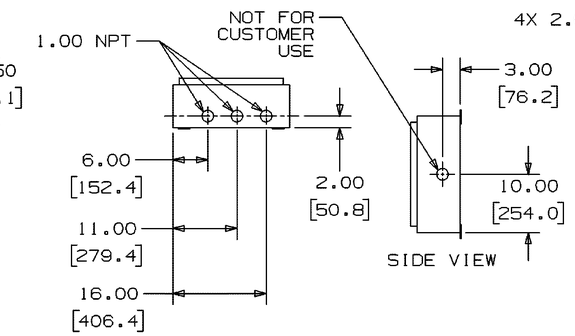

233

JB20A

BOTTOM VIEW
20.00W X 20.00H X 7.35D
FOR DETAILS SEE ML ITEM 1155

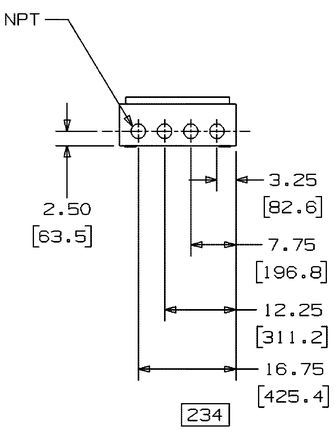

234

JB20B

BOTTOM VIEW
20.00W X 24.00H X 9.16D
FOR DETAILS SEE ML ITEM 1155

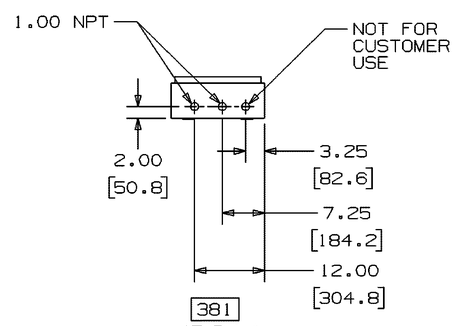

381

JB21A

BOTTOM VIEW
16.00W X 12.00H X 6.31D
FOR DETAILS SEE ML ITEM 1155

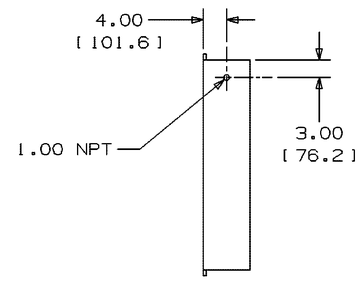

390

JB34

SIDE VIEW, UPSTREAM END
30.00W X 36.00H X 8.00D
FOR DETAILS SEE ML ITEM 0557

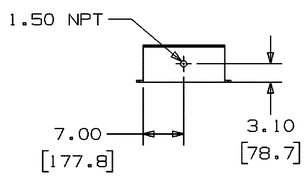

125

JB55

BOTTOM VIEW
14.00W X 16.00H X 6.01D
FOR DETAILS SEE ML ITEM 1156

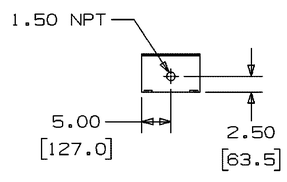

126

JB56

BOTTOM VIEW
10.00W X 12.00H X 5.26D
FOR DETAILS SEE ML ITEM 1156

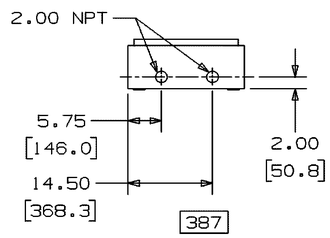

387

JB20G

BOTTOM VIEW
20.00W X 12.00H X 6.17D
FOR DETAILS SEE ML ITEM 1156

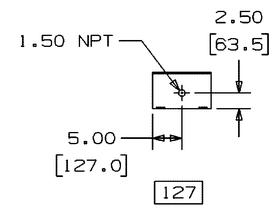

127

JB85

BOTTOM VIEW
10.00W X 12.00H X 5.26D
FOR DETAILS SEE ML ITEM 1156

121 TURBINE COMPARTMENT

REV.	FECHA	REVISIONES O MODIFICACIONES	DIBUJO	REVISO	APROBO
0	06/07/11	ISSUED FOR CONSTRUCTION, SEE NOTE 10 SHEET 1	SAB	CB	TK

REF. FABRICANTE		
REF. FABRICANTE	FABRICANTE	O/C:

N° DE DOCUMENTO	DESCRIPCIÓN	REV.	FECHA
AGM-02-0204-PLA-E-0006	CABLE SUMMARY		
AGM-02-0204-PLA-M-0041	WATER INJECTION SKID – GENRAL ARRANGEMENT		
AGM-02-0204-PLA-G-0057	PLOT PLAN	0	16/06/11

DOCUMENTOS DE REFERENCIA

DERWICK ASSOCIATES CORP. | ProEnergy SERVICES | CORPOELEC | La Electricidad de Caracas | GERENCIA FUNCIONAL DE INGENIERIA Y PROYECTOS | SENECA

AMPLIACIÓN DE LA CAPACIDAD DE GENERACIÓN Y TRANSPORTE DE ELECTRICIDAD EN LA ISLA DE MARGARITA

OUTLINE – GT PACKAGE CONNECTION ELECTRICAL
DUAL FUEL MOD. UNITS 298034 & 298035
(MLI 0301)

PLANO N°:	REV:		
PROYECTO N°: 409-2956-1			
CALCULO:	PROYECTO:	ESCALA: NONE	PLANO No: AGM-02-0204-PLA-E-0002
REVISADO: C. Brown	CALCULO:	FECHA: 06/07/11	
DIBUJO: S. Boerckel	REVISADO: J. Castillo	DISK. N°	
APROBADO: T. Koontz	DIBUJO:	ESC./PLOTEO:	REV. 0
ARCHIVO:	APROBADO: M. Monticelli	ARCHIVO:	PAGINA: 6 DE: 16

F_A1_11 – 841x594mm

N° PLANO: AGM-02-0204-PLA-E-0002 | 0

IMPORTANTE
ESTE PLANO FUE ELABORADO EN AUTOCAD V.2008
CUALQUIER MODIFICACION REALIZADA EN CAMPO DEBERA SER NOTIFICADO A LA UNIDAD RESPONSABLE.
QUEDA PROHIBIDO CORREGIR ESTE PLANO SIN AUTORIZACION DE ESTA UNIDAD.

ALL DIMENSIONS IN BRACKETS [ ] ARE MILLIMETER; EXPRESSED DIMENSIONS ARE INCHES

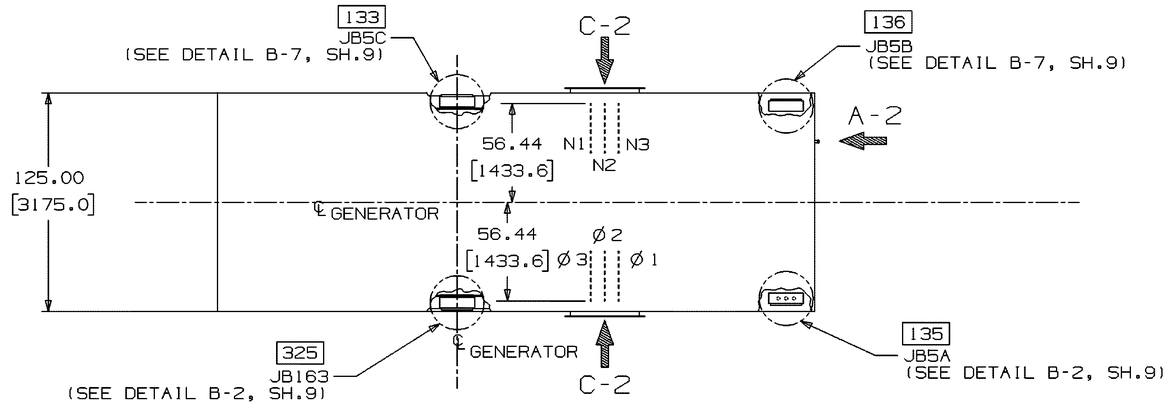

PLAN VIEW

FOR LOCATION SEE MLI 0306
ALSO SEE PLAN VIEW, SH.8

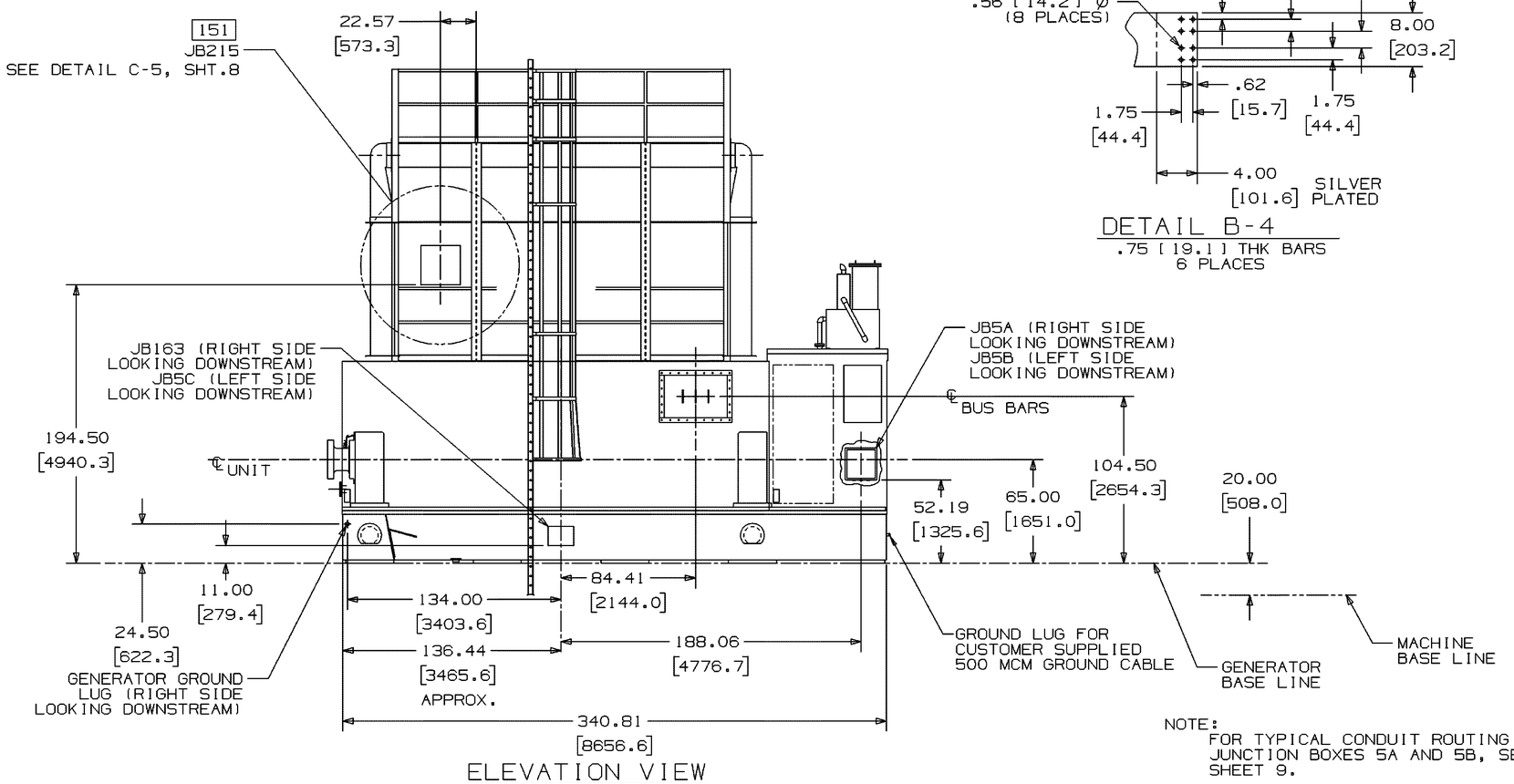

ELEVATION VIEW

RIGHT SIDE LOOKING DOWNSTREAM

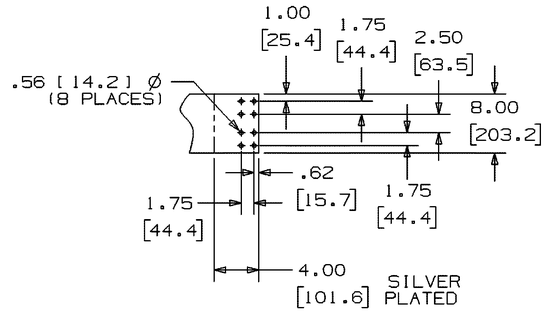

DETAIL B-4

.75 [19.1] THK BARS
6 PLACES

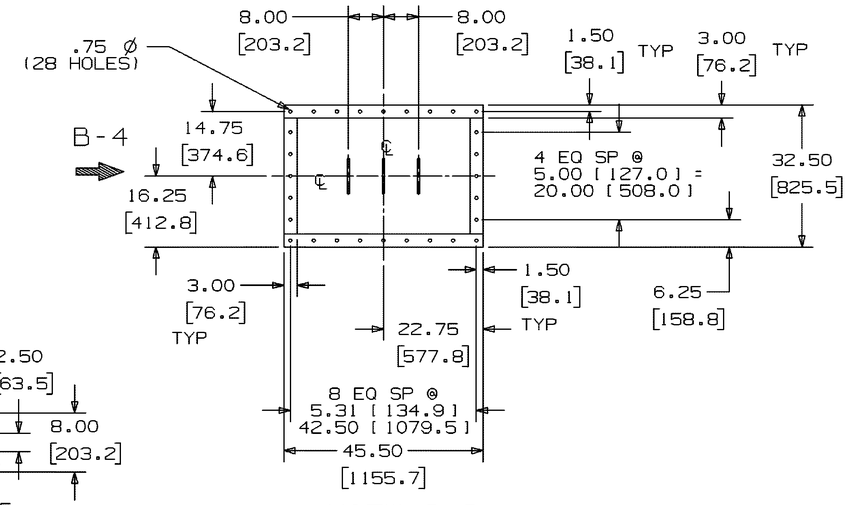

VIEW C-2

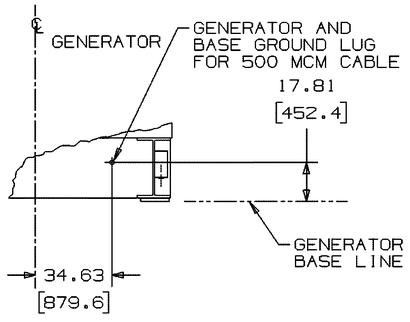

VIEW A-2

PARTIAL END VIEW

134 GENERATOR COMPARTMENT

NOTE:
FOR TYPICAL CONDUIT ROUTING FOR JUNCTION BOXES 5A AND 5B, SEE SHEET 9.

N° DE DOCUMENTO	DESCRIPCIÓN	REV.	FECHA
AGM-02-0204-PLA-E-0006	CABLE SUMMARY		
AGM-02-0204-PLA-M-0041	WATER INJECTION SKID – GENRAL ARRANGEMENT		
AGM-02-0204-PLA-G-0057	PLOT PLAN	0	16/06/11

DOCUMENTOS DE REFERENCIA

REV.	FECHA	REVISIONES O MODIFICACIONES	DIBUJO	REVISO	APROBO
0	06/07/11	ISSUED FOR CONSTRUCTION, SEE NOTE 10 SHEET 1	SAB	CB	TK

REF. FABRICANTE		
REF. FABRICANTE	FABRICANTE	O/C:

DERWICK ASSOCIATES CORP. | ProEnergy SERVICES | CORPOELEC | La Electricidad de Caracas | GERENCIA FUNCIONAL DE INGENIERIA Y PROYECTOS | SENECA

AMPLIACIÓN DE LA CAPACIDAD DE GENERACIÓN Y TRANSPORTE DE ELECTRICIDAD EN LA ISLA DE MARGARITA

OUTLINE – GT PACKAGE CONNECTION ELECTRICAL DUAL FUEL MOD. UNITS 298034 & 298035 (MLI 0301)

PLANO N°:	REV:		
PROYECTO N°: 409-2956-1			
CALCULO:	PROYECTO:	ESCALA: NONE	PLANO No: AGM-02-0204-PLA-E-0002
REVISADO: C. Brown	CALCULO:	FECHA: 06/07/11	
DIBUJO: S. Boerckel	REVISADO: J. Castillo	DISK. N°	
APROBADO: T. Koontz	DIBUJO:	ESC./PLOTEO:	REV. 0
ARCHIVO:	APROBADO: M. Monticelli	ARCHIVO:	PAGINA: 7 DE: 16

F_A1_11 – 841x594mm

N° PLANO: AGM-02-0204-PLA-E-0002 | 0

IMPORTANTE

ESTE PLANO FUE ELABORADO EN AUTOCAD V.2008
CUALQUIER MODIFICACION REALIZADA EN CAMPO DEBERA SER NOTIFICADO A LA UNIDAD RESPONSABLE.
QUEDA PROHIBIDO CORREGIR ESTE PLANO SIN AUTORIZACION DE ESTA UNIDAD.

ALL DIMENSIONS IN BRACKETS [ ] ARE MILLIMETER; EXPRESSED DIMENSIONS ARE INCHES

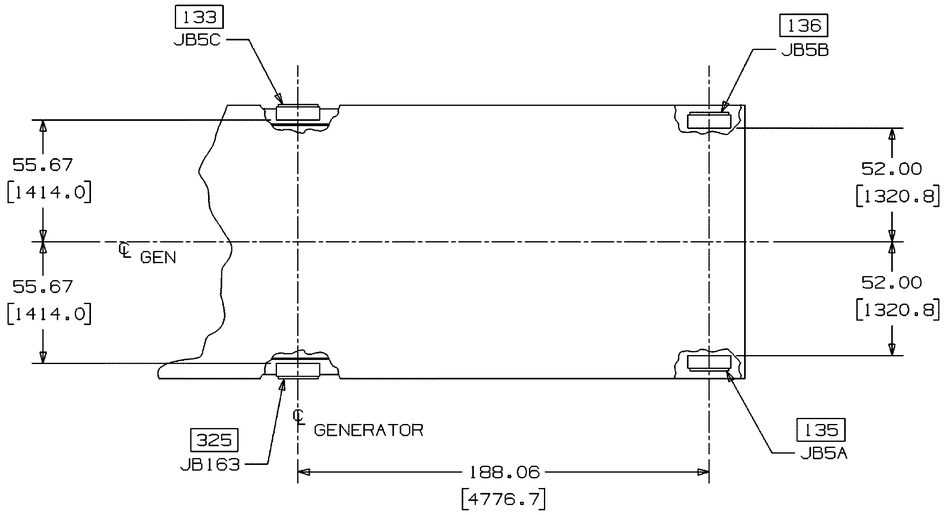

PLAN VIEW

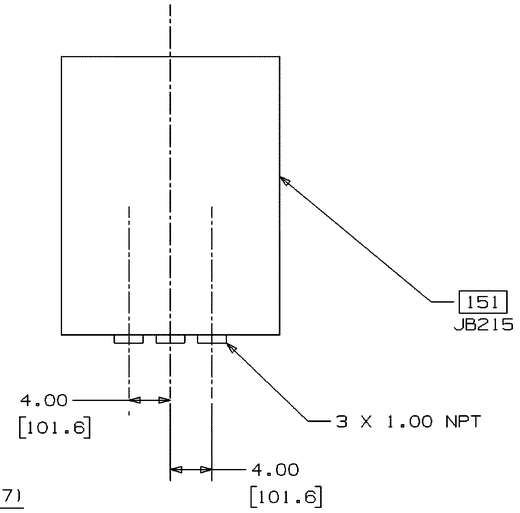

VIEW C-5 (SH 7)

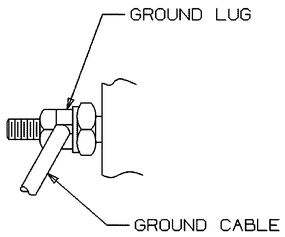

BURNDY KC-34 SERVIT POST

TYPICAL OF ALL BASE GRD LUGS

134 GENERATOR COMPARTMENT

N° DE DOCUMENTO	DESCRIPCIÓN	REV.	FECHA
AGM-02-0204-PLA-E-0006	CABLE SUMMARY		
AGM-02-0204-PLA-M-0041	WATER INJECTION SKID – GENRAL ARRANGEMENT		
AGM-02-0204-PLA-G-0057	PLOT PLAN	0	16/06/11

DOCUMENTOS DE REFERENCIA

REV.	FECHA	REVISIONES O MODIFICACIONES	DIBUJO	REVISO	APROBO
0	06/07/11	ISSUED FOR CONSTRUCTION, SEE NOTE 10 SHEET 1	SAB	CB	TK

REF. FABRICANTE		
REF. FABRICANTE	FABRICANTE	O/C:

DERWICK ASSOCIATES CORP. | ProEnergy SERVICES | CORPOELEC CORPORACIÓN ELÉCTRICA NACIONAL | La Electricidad de Caracas | GERENCIA FUNCIONAL DE INGENIERIA Y PROYECTOS | SENECA

AMPLIACIÓN DE LA CAPACIDAD DE GENERACIÓN Y TRANSPORTE DE ELECTRICIDAD EN LA ISLA DE MARGARITA

OUTLINE – GT PACKAGE CONNECTION ELECTRICAL DUAL FUEL MOD. UNITS 298034 & 298035 (MLI 0301)

PLANO N°:	REV:		
PROYECTO N°: 409-2956-1			
CALCULO:	PROYECTO:	ESCALA: NONE	PLANO No: AGM-02-0204-PLA-E-0002
REVISADO: C. Brown	CALCULO:	FECHA: 06/07/11	
DIBUJO: S. Boerckel	REVISADO: J. Castillo	DISK. N°	
APROBADO: T. Koontz	DIBUJO:	ESC./PLOTEO:	
ARCHIVO:	APROBADO: M. Monticelli	ARCHIVO:	PAGINA: 8 DE: 16 — REV. 0

F_A1_11 – 841x594mm

N° PLANO: AGM-02-0204-PLA-E-0002 | 0

IMPORTANTE

ESTE PLANO FUE ELABORADO EN AUTOCAD V.2008
CUALQUIER MODIFICACION REALIZADA EN CAMPO DEBERA SER NOTIFICADO A LA UNIDAD RESPONSABLE.
QUEDA PROHIBIDO CORREGIR ESTE PLANO SIN AUTORIZACION DE ESTA UNIDAD.

ALL DIMENSIONS IN BRACKETS [ ] ARE MILLIMETER; EXPRESSED DIMENSIONS ARE INCHES

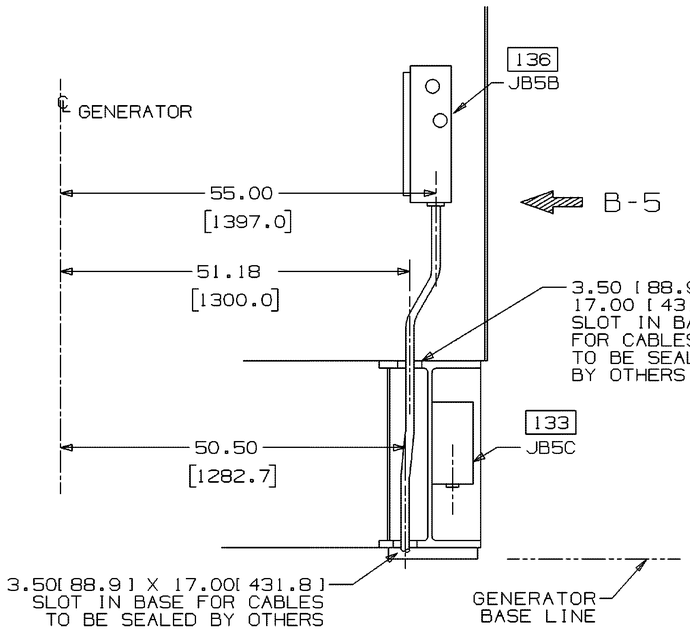

DETAIL B-7 (SH.7)

TYPICAL ROUTING FOR
JB5B AND JB5C CABLES/CONDUIT

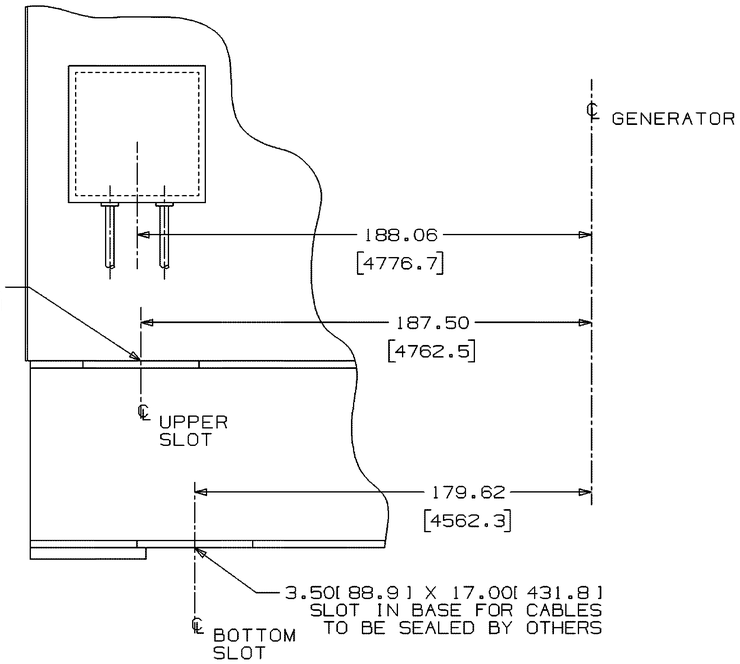

VIEW B-5

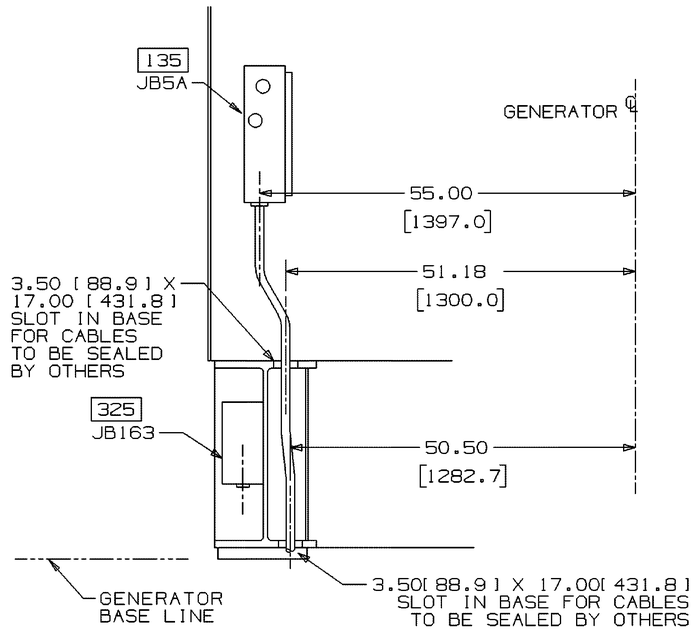

DETAIL B-2 (SH.7)

TYPICAL ROUTING FOR
JB5A AND JB163 CABLES/CONDUIT

134 GENERATOR COMPARTMENT

N° DE DOCUMENTO	DESCRIPCIÓN	REV.	FECHA
AGM-02-0204-PLA-E-0006	CABLE SUMMARY		
AGM-02-0204-PLA-M-0041	WATER INJECTION SKID – GENRAL ARRANGEMENT		
AGM-02-0204-PLA-G-0057	PLOT PLAN	0	16/06/11

DOCUMENTOS DE REFERENCIA

REV.	FECHA	REVISIONES O MODIFICACIONES	DIBUJO	REVISO	APROBO
0	06/07/11	ISSUED FOR CONSTRUCTION, SEE NOTE 10 SHEET 1	SAB	CB	TK

REF. FABRICANTE		
REF. FABRICANTE	FABRICANTE	O/C:

DERWICK ASSOCIATES CORP. | ProEnergy SERVICES | CORPOELEC CORPORACIÓN ELÉCTRICA NACIONAL | La Electricidad de Caracas | GERENCIA FUNCIONAL DE INGENIERIA Y PROYECTOS | SENECA

AMPLIACIÓN DE LA CAPACIDAD DE GENERACIÓN Y TRANSPORTE DE ELECTRICIDAD EN LA ISLA DE MARGARITA

OUTLINE – GT PACKAGE CONNECTION ELECTRICAL
DUAL FUEL MOD. UNITS 298034 & 298035
(MLI 0301)

PLANO N°:	REV:		
PROYECTO N°: 409-2956-1			
CALCULO:	PROYECTO:	ESCALA: NONE	PLANO No:
REVISADO: C. Brown	CALCULO:	FECHA: 06/07/11	AGM-02-0204-PLA-E-0002
DIBUJO: S. Boerckel	REVISADO: J. Castillo	DISK. N°	
APROBADO: T. Koontz	DIBUJO:	ESC./PLOTEO:	REV. 0
ARCHIVO:	APROBADO: M. Monticelli	ARCHIVO:	PAGINA: 9 DE: 16

F_A1_11 – 841x594mm

N° PLANO: AGM-02-0204-PLA-E-0002 | 0

IMPORTANTE

ESTE PLANO FUE ELABORADO EN AUTOCAD V.2008
CUALQUIER MODIFICACION REALIZADA EN CAMPO DEBERA SER NOTIFICADO A LA UNIDAD RESPONSABLE.
QUEDA PROHIBIDO CORREGIR ESTE PLANO SIN AUTORIZACION DE ESTA UNIDAD.

ALL DIMENSIONS IN BRACKETS [ ] ARE MILLIMETER; EXPRESSED DIMENSIONS ARE INCHES

NOTES:

1. PIT REQUIRED UNDERNEATH THE COMPARTMENT TO ALLOW INSTALLER TO MAKE PLUG-IN ELECTRICAL CONNECTIONS TO EQUIP. (SEE MLI 0323 FOR PIT REQUIREMENTS). IF NO PIT, HARDWIRING IS REQUIRED.
2. BUS JOINTS AND CONNECTIONS TO BE TAPED AT INSTALLATION BY CUSTOMER.
3. TOTAL WEIGHT OF BUS DUCT WHICH CAN BE SUPPORTED IS 700 LBS (317KG).
4. TERMINAL BOARDS FOR BUS DUCT HEATER PIG-TAIL, LOCATION IN SWGR, NEAR BUS DUCT FLANGE.
5. PURCHASER TO DRILL CONDUIT PLATES AS REQUIRED.

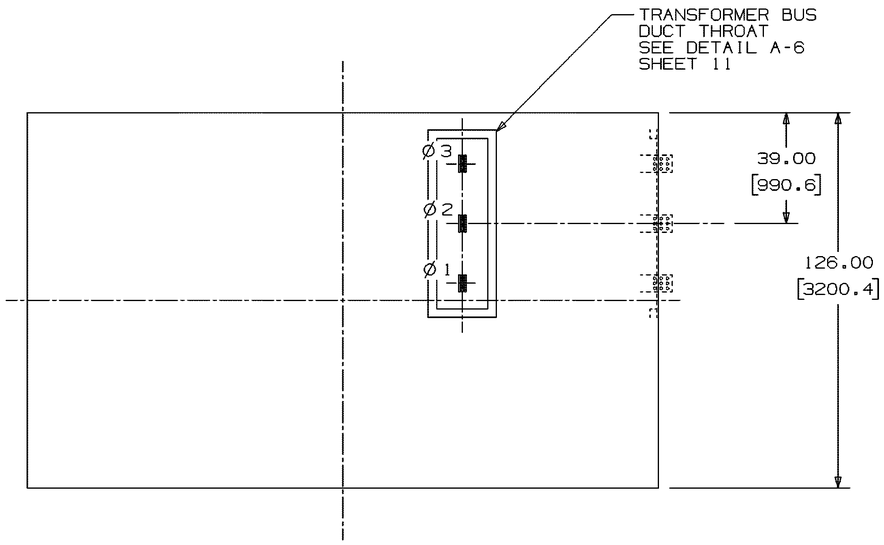

PLAN VIEW

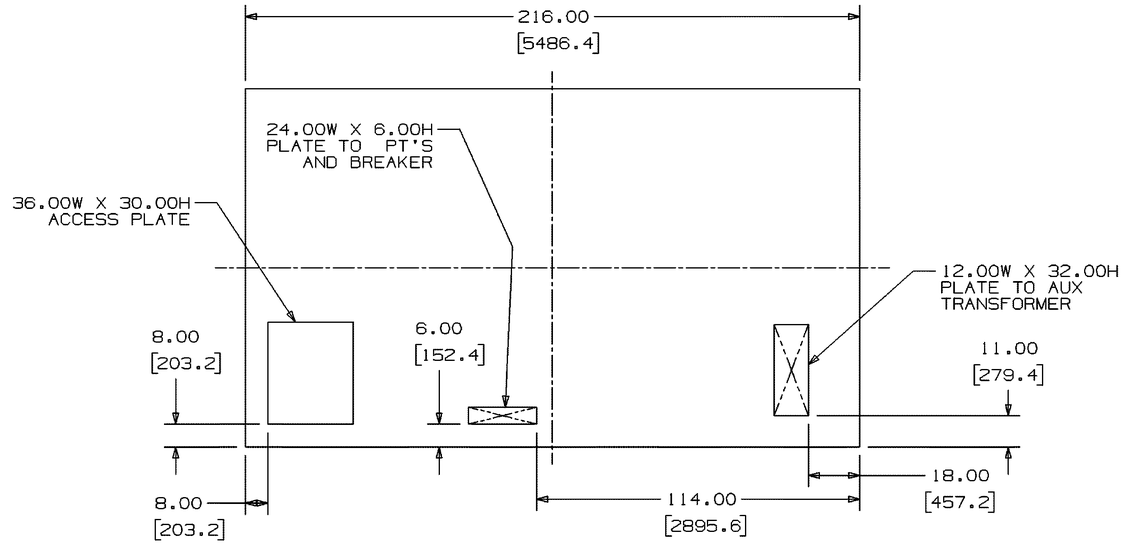

VIEW C-3

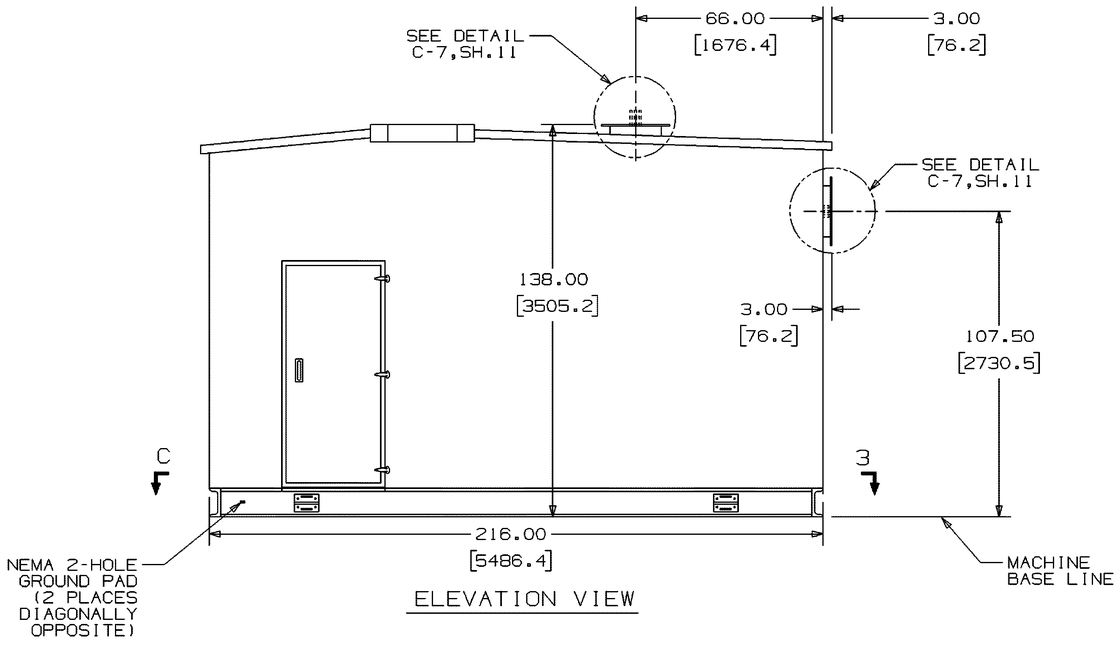

ELEVATION VIEW

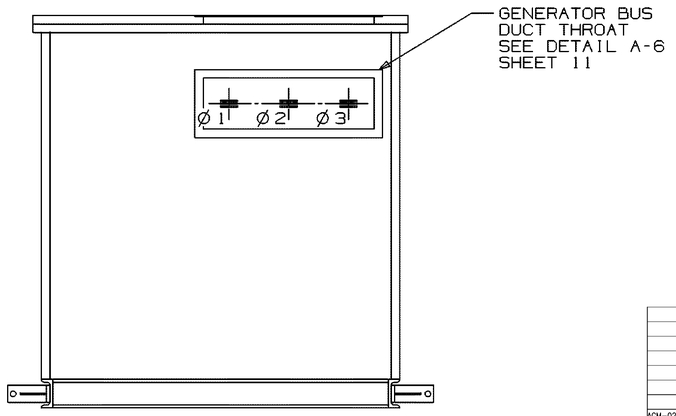

VIEW A-4

146 SWITCHGEAR

N° DE DOCUMENTO	DESCRIPCIÓN	REV.	FECHA
AGM-02-0204-PLA-E-0006	CABLE SUMMARY		
AGM-02-0204-PLA-M-0041	WATER INJECTION SKID – GENRAL ARRANGEMENT		
AGM-02-0204-PLA-G-0057	PLOT PLAN	0	16/06/11

DOCUMENTOS DE REFERENCIA

REV.	FECHA	REVISIONES O MODIFICACIONES	DIBUJO	REVISO	APROBO
0	06/07/11	ISSUED FOR CONSTRUCTION, SEE NOTE 10 SHEET 1	SAB	CB	TK

REF. FABRICANTE		
REF. FABRICANTE	FABRICANTE	O/C:

DERWICK ASSOCIATES EGBERT | ProEnergy SERVICES | CORPOELEC CORPORACIÓN ELÉCTRICA NACIONAL | La Electricidad de Caracas | GERENCIA FUNCIONAL DE INGENIERIA Y PROYECTOS SENECA

AMPLIACIÓN DE LA CAPACIDAD DE GENERACIÓN Y TRANSPORTE DE ELECTRICIDAD EN LA ISLA DE MARGARITA

OUTLINE – GT PACKAGE CONNECTION ELECTRICAL DUAL FUEL MOD. UNITS 298034 & 298035 (MLI 0301)

PLANO N°:	REV:		
PROYECTO N°: 409-2956-1			
CALCULO:	PROYECTO:	ESCALA: NONE	PLANO No: AGM-02-0204-PLA-E-0002
REVISADO: C. Brown	CALCULO:	FECHA: 06/07/11	
DIBUJO: S. Boerckel	REVISADO: J. Castillo	DISK. N°	
APROBADO: T. Koontz	DIBUJO:	ESC./PLOTEO:	
ARCHIVO:	APROBADO: M. Monticelli	ARCHIVO:	PAGINA: 10 DE: 16 — REV. 0

F_A1_11 – 841x594mm

N° PLANO: AGM-02-0204-PLA-E-0002 | 0

IMPORTANTE

ESTE PLANO FUE ELABORADO EN AUTOCAD V.2008
CUALQUIER MODIFICACION REALIZADA EN CAMPO DEBERA SER NOTIFICADO A LA UNIDAD RESPONSABLE.
QUEDA PROHIBIDO CORREGIR ESTE PLANO SIN AUTORIZACION DE ESTA UNIDAD.

ALL DIMENSIONS IN BRACKETS [ ] ARE MILLIMETER; EXPRESSED DIMENSIONS ARE INCHES

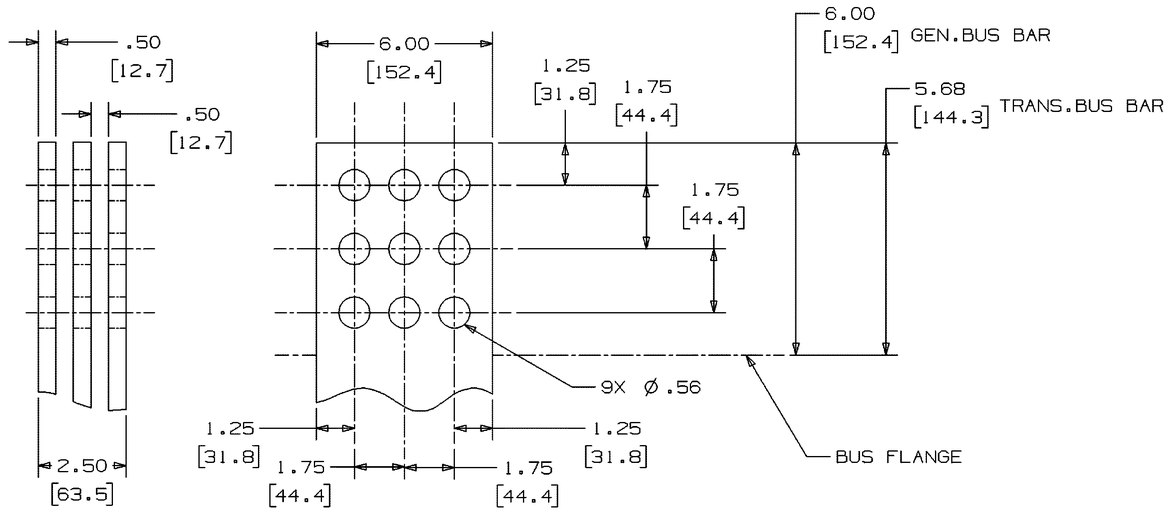

DETAIL C-7 (SH.10)

BUS CONNECTION PAD TYP. 6 PLACES

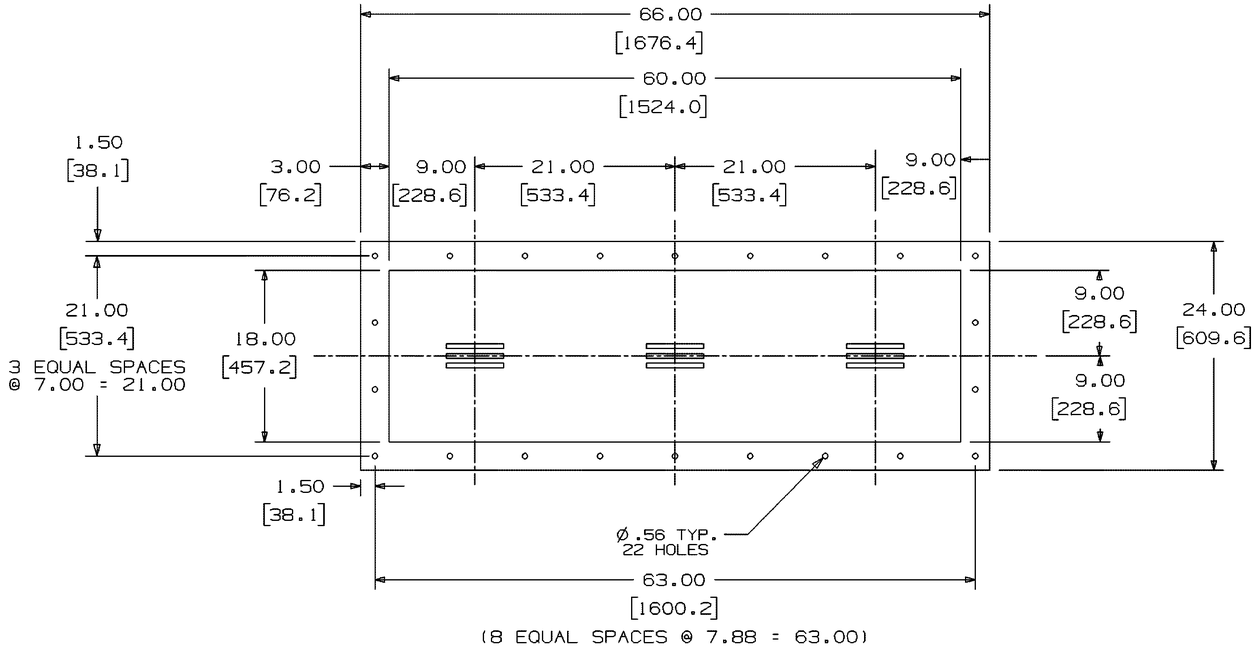

DETAIL A-6 (SH.10)

TYPICAL FOR TRANSFORMER NON SEGREGATED BUS DUCT THROAT AND GENERATOR NON-SEGREGATED BUS DUCT THROAT

146 SWITCHGEAR

N° DE DOCUMENTO	DESCRIPCIÓN	REV.	FECHA
AGM-02-0204-PLA-E-0006	CABLE SUMMARY		
AGM-02-0204-PLA-M-0041	WATER INJECTION SKID – GENRAL ARRANGEMENT		
AGM-02-0204-PLA-G-0057	PLOT PLAN	0	16/06/11

DOCUMENTOS DE REFERENCIA

REV.	FECHA	REVISIONES O MODIFICACIONES	DIBUJO	REVISO	APROBO
0	06/07/11	ISSUED FOR CONSTRUCTION, SEE NOTE 10 SHEET 1	SAB	CB	TK

REF. FABRICANTE		
REF. FABRICANTE	FABRICANTE	O/C:

DERWICK ASSOCIATES CORP. | ProEnergy SERVICES | CORPOELEC | La Electricidad de Caracas | GERENCIA FUNCIONAL DE INGENIERIA Y PROYECTOS | SENECA

AMPLIACIÓN DE LA CAPACIDAD DE GENERACIÓN Y TRANSPORTE DE ELECTRICIDAD EN LA ISLA DE MARGARITA

OUTLINE – GT PACKAGE CONNECTION ELECTRICAL
DUAL FUEL MOD. UNITS 298034 & 298035
(MLI 0301)

PLANO N°: | REV:
PROYECTO N°: 409-2956-1

CALCULO:	PROYECTO:	ESCALA: NONE	PLANO No: AGM-02-0204-PLA-E-0002
REVISADO: C. Brown	CALCULO:	FECHA: 06/07/11	
DIBUJO: S. Boerckel	REVISADO: J. Castillo	DISK. N°	
APROBADO: T. Koontz	DIBUJO:	ESC./PLOTEO:	REV. 0
ARCHIVO:	APROBADO: M. Monticelli	ARCHIVO:	PAGINA: 11 DE: 16

F_A1_11 – 841x594mm

N° PLANO: AGM-02-0204-PLA-E-0002 | 0

I M P O R T A N T E

ESTE PLANO FUE ELABORADO EN AUTOCAD V.2008
CUALQUIER MODIFICACION REALIZADA EN CAMPO DEBERA SER NOTIFICADO A LA UNIDAD RESPONSABLE.
QUEDA PROHIBIDO CORREGIR ESTE PLANO SIN AUTORIZACION DE ESTA UNIDAD.

ALL DIMENSIONS IN BRACKETS [ ] ARE MILLIMETER; EXPRESSED DIMENSIONS ARE INCHES

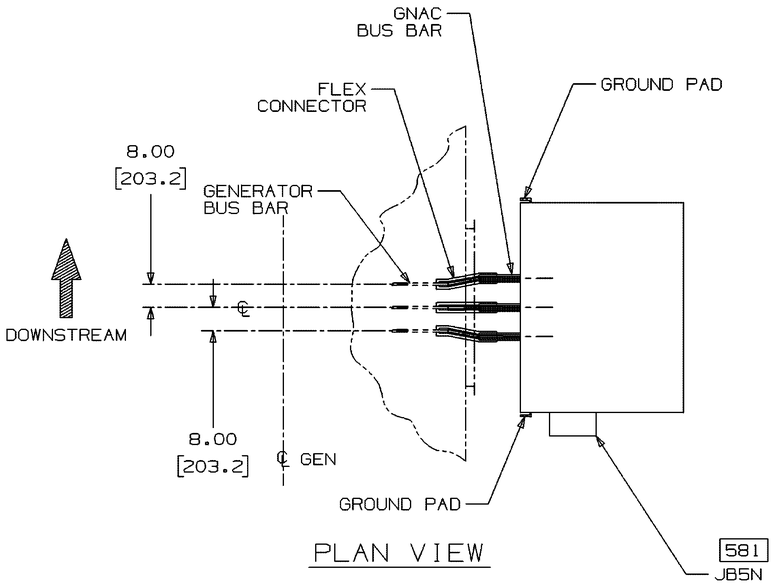

PLAN VIEW

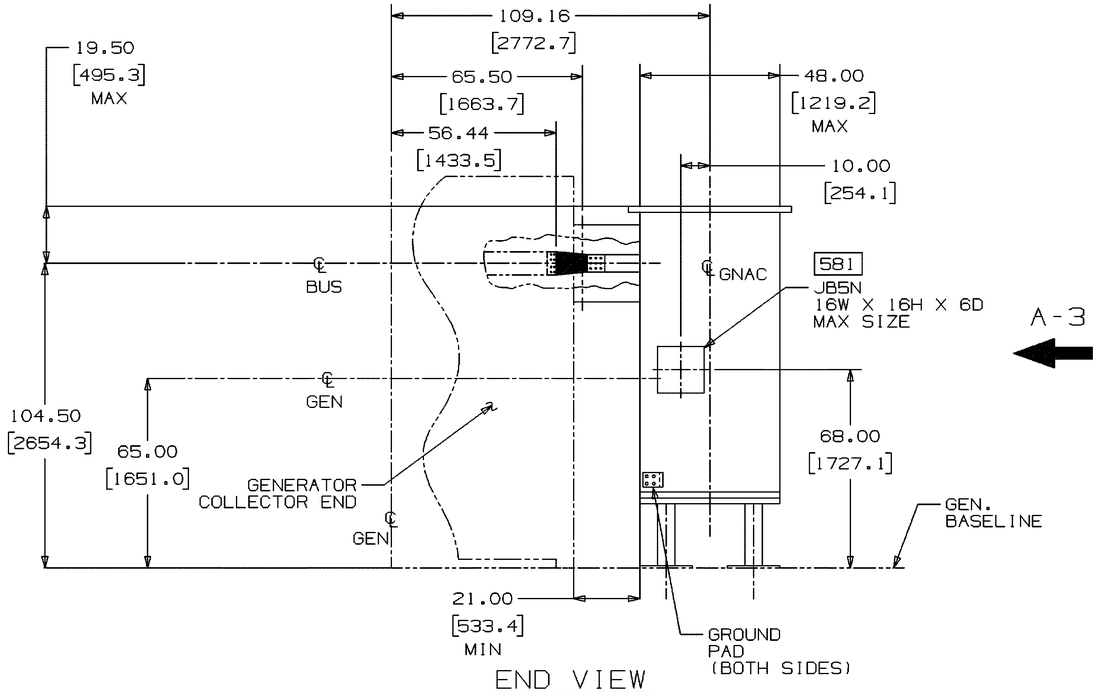

END VIEW
LOOKING DOWNSTREAM

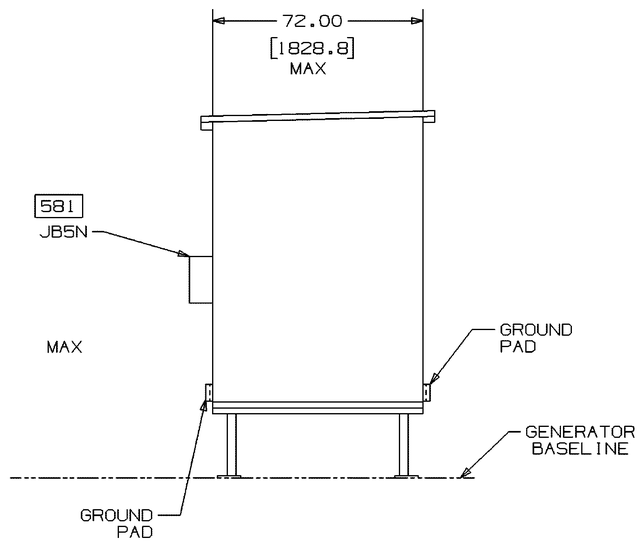

VIEW A-3
RIGHT SIDE
LOOKING DOWNSTREAM

REV.	FECHA	REVISIONES O MODIFICACIONES	DIBUJO	REVISO	APROBO
0	06/07/11	ISSUED FOR CONSTRUCTION, SEE NOTE 10 SHEET 1	SAB	CB	TK

REF. FABRICANTE		
REF. FABRICANTE	FABRICANTE	O/C:

280
GENERATOR NEUTRAL
ACCESSORY COMPARTMENT
(GNAC)

N° DE DOCUMENTO	DESCRIPCIÓN	REV.	FECHA
AGM-02-0204-PLA-E-0006	CABLE SUMMARY		
AGM-02-0204-PLA-M-0041	WATER INJECTION SKID – GENRAL ARRANGEMENT		
AGM-02-0204-PLA-G-0057	PLOT PLAN	0	16/06/11

DOCUMENTOS DE REFERENCIA

DERWICK ASSOCIATES COMP. | ProEnergy SERVICES | CORPOELEC CORPORACIÓN ELÉCTRICA NACIONAL | La Electricidad de Caracas | GERENCIA FUNCIONAL DE INGENIERIA Y PROYECTOS | SENECA

AMPLIACIÓN DE LA CAPACIDAD DE GENERACIÓN Y TRANSPORTE DE ELECTRICIDAD EN LA ISLA DE MARGARITA

OUTLINE – GT PACKAGE CONNECTION ELECTRICAL
DUAL FUEL MOD. UNITS 298034 & 298035
(MLI 0301)

PLANO N°:	REV:		
PROYECTO N°: 409-2956-1			
CALCULO:	PROYECTO:	ESCALA: NONE	PLANO No:
REVISADO: C. Brown	CALCULO:	FECHA: 06/07/11	AGM-02-0204-PLA-E-0002
DIBUJO: S. Boerckel	REVISADO: J. Castillo	DISK. N°	
APROBADO: T. Koontz	DIBUJO:	ESC./PLOTEO:	REV. 0
ARCHIVO:	APROBADO: M. Monticelli	ARCHIVO:	PAGINA: 12 DE: 16

F_A1_11 – 841x594mm

N° PLANO: AGM-02-0204-PLA-E-0002 | 0

IMPORTANTE

ESTE PLANO FUE ELABORADO EN AUTOCAD V.2008
CUALQUIER MODIFICACION REALIZADA EN CAMPO DEBERA SER NOTIFICADO A LA UNIDAD RESPONSABLE.
QUEDA PROHIBIDO CORREGIR ESTE PLANO SIN AUTORIZACION DE ESTA UNIDAD.

ALL DIMENSIONS IN BRACKETS [ ] ARE MILLIMETER; EXPRESSED DIMENSIONS ARE INCHES

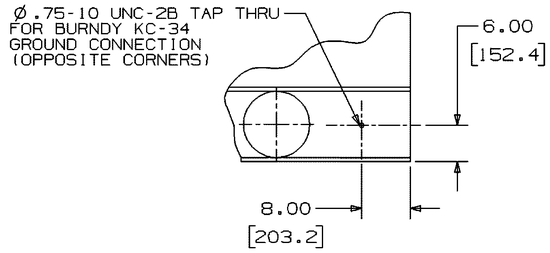

DETAIL C-5

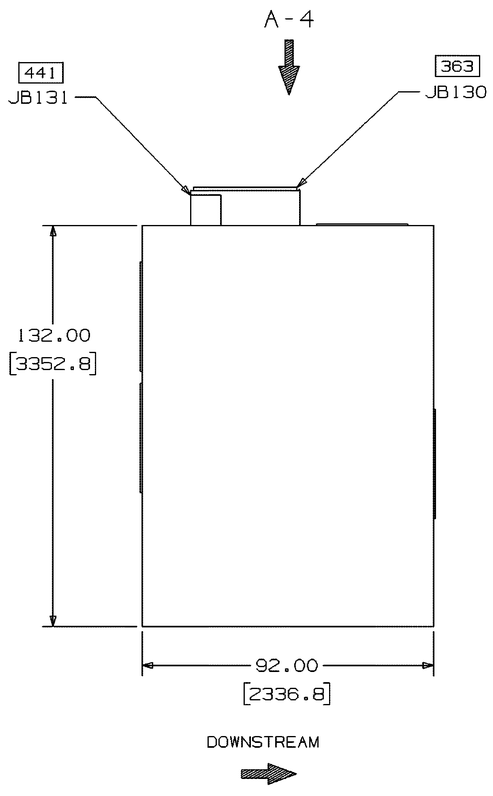

PLAN VIEW

FOR LOCATION SEE MLI 0306

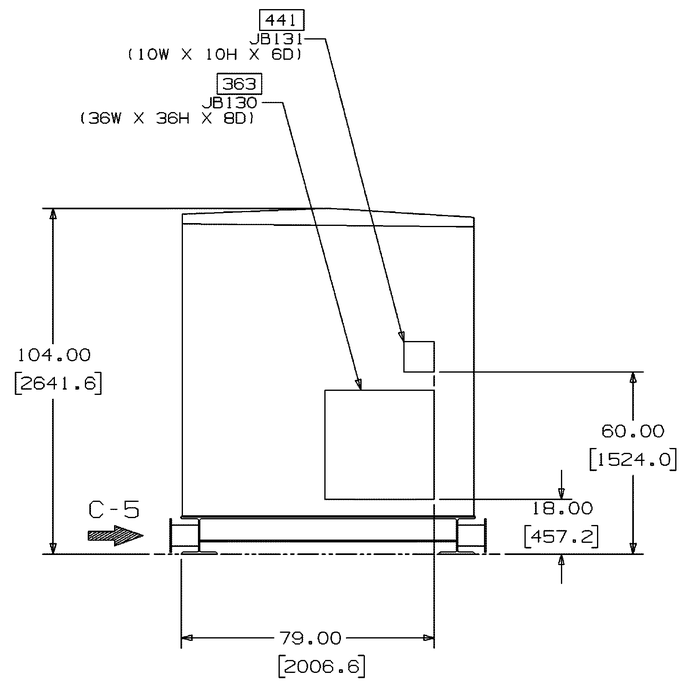

VIEW A-4

NOTE:

FIELD DRILL JUNCTION BOXES FOR CONDUIT ENTRANCE

N° DE DOCUMENTO	DESCRIPCIÓN	REV.	FECHA
AGM-02-0204-PLA-E-0006	CABLE SUMMARY		
AGM-02-0204-PLA-M-0041	WATER INJECTION SKID – GENRAL ARRANGEMENT		
AGM-02-0204-PLA-G-0057	PLOT PLAN	0	16/06/11

DOCUMENTOS DE REFERENCIA

REV.	FECHA	REVISIONES O MODIFICACIONES	DIBUJO	REVISO	APROBO
0	06/07/11	ISSUED FOR CONSTRUCTION, SEE NOTE 10 SHEET 1	SAB	CB	TK

REF. FABRICANTE		
REF. FABRICANTE	FABRICANTE	O/C:

DERWICK ENERGY ASSOCIATES CORP. | ProEnergy SERVICES | CORPOELEC CORPORACIÓN ELÉCTRICA NACIONAL | La Electricidad de Caracas | GERENCIA FUNCIONAL DE INGENIERIA Y PROYECTOS | SENECA

AMPLIACIÓN DE LA CAPACIDAD DE GENERACIÓN Y TRANSPORTE DE ELECTRICIDAD EN LA ISLA DE MARGARITA

OUTLINE – GT PACKAGE CONNECTION ELECTRICAL DUAL FUEL MOD. UNITS 298034 & 298035 (MLI 0301)

PLANO N°:	REV:		
PROYECTO N°: 409-2956-1			
CALCULO:	PROYECTO:	ESCALA: NONE	PLANO No: AGM-02-0204-PLA-E-0002
REVISADO: C. Brown	CALCULO:	FECHA: 06/07/11	
DIBUJO: S. Boerckel	REVISADO: J. Castillo	DISK. N°	
APROBADO: T. Koontz	DIBUJO:	ESC./PLOTEO:	
ARCHIVO:	APROBADO: M. Monticelli	ARCHIVO:	PAGINA: 13 DE: 16 — REV. 0

F_A1_11 – 841x594mm

N° PLANO: AGM-02-0204-PLA-E-0002 0

IMPORTANTE
ESTE PLANO FUE ELABORADO EN AUTOCAD V.2008
CUALQUIER MODIFICACION REALIZADA EN CAMPO DEBERA SER NOTIFICADO A LA UNIDAD RESPONSABLE.
QUEDA PROHIBIDO CORREGIR ESTE PLANO SIN AUTORIZACION DE ESTA UNIDAD.

ALL DIMENSIONS IN BRACKETS [ ] ARE MILLIMETER; EXPRESSED DIMENSIONS ARE INCHES

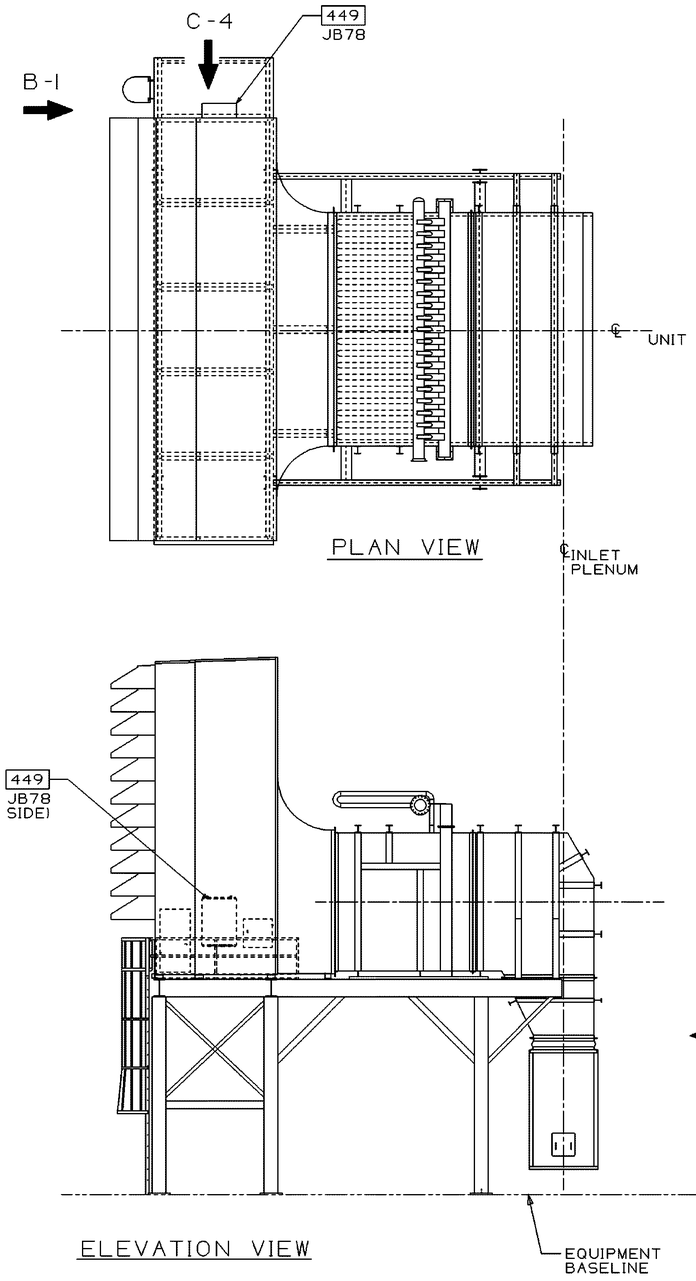

PLAN VIEW

ELEVATION VIEW

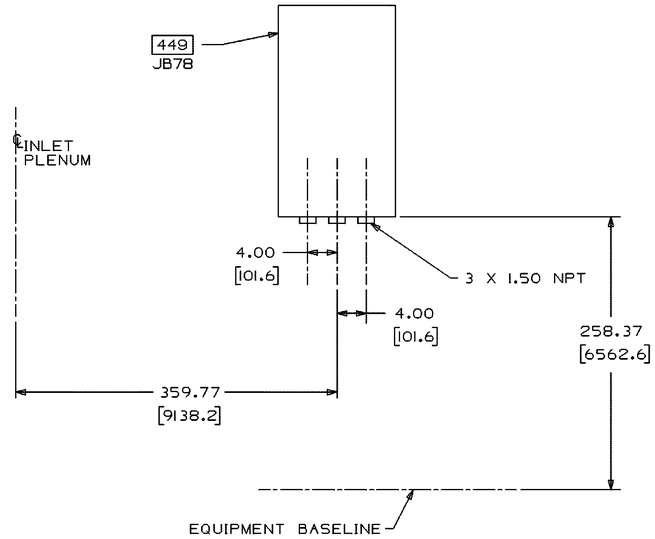

DETAIL C-4

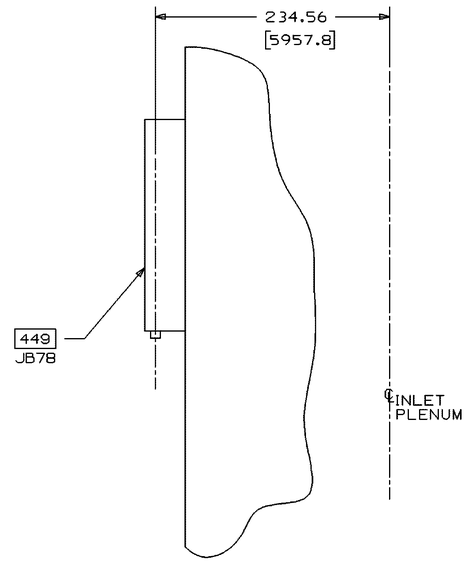

DETAIL B-1

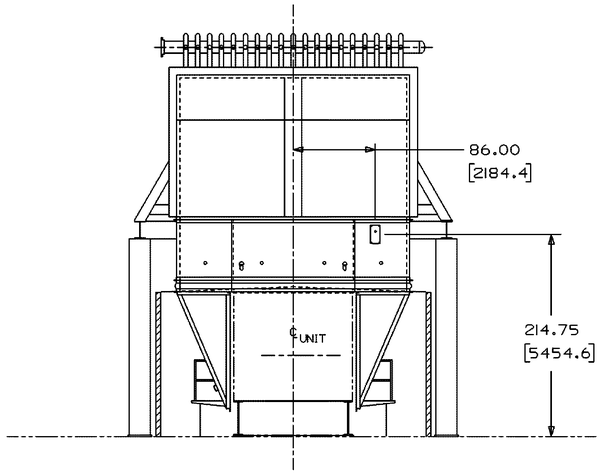

DETAIL A-3

157 INLET FILTER HOUSE
AND
407 INLET DUCT

N° DE DOCUMENTO	DESCRIPCIÓN	REV.	FECHA
AGM-02-0204-PLA-E-0006	CABLE SUMMARY		
AGM-02-0204-PLA-M-0041	WATER INJECTION SKID – GENRAL ARRANGEMENT		
AGM-02-0204-PLA-G-0057	PLOT PLAN	0	16/06/11

DOCUMENTOS DE REFERENCIA

REV.	FECHA	REVISIONES O MODIFICACIONES	DIBUJO	REVISO	APROBO
0	06/07/11	ISSUED FOR CONSTRUCTION, SEE NOTE 10 SHEET 1	SAB	CB	TK

REF. FABRICANTE		
REF. FABRICANTE	FABRICANTE	O/C:

DERWICK ProEnergy CORPOELEC La Electricidad de Caracas SENECA

AMPLIACIÓN DE LA CAPACIDAD DE GENERACIÓN Y TRANSPORTE DE ELECTRICIDAD EN LA ISLA DE MARGARITA

OUTLINE – GT PACKAGE CONNECTION ELECTRICAL
DUAL FUEL MOD. UNITS 298034 & 298035
(MLI 0301)

PLANO N°:	REV:		
PROYECTO N°: 409-2956-1			
CALCULO:	PROYECTO:	ESCALA: NONE	PLANO No: AGM-02-0204-PLA-E-0002
REVISADO: C. Brown	CALCULO:	FECHA: 06/07/11	
DIBUJO: S. Boerckel	REVISADO: J. Castillo	DISK. N°	
APROBADO: T. Koontz	DIBUJO:	ESC./PLOTEO:	REV. 0
ARCHIVO:	APROBADO: M. Monticelli	ARCHIVO:	PAGINA: 14 DE: 16

F_A1_11 – 841x594mm

N° PLANO: AGM-02-0204-PLA-E-0002 | 0

IMPORTANTE

ESTE PLANO FUE ELABORADO EN AUTOCAD V.2008
CUALQUIER MODIFICACION REALIZADA EN CAMPO DEBERA SER NOTIFICADO A LA UNIDAD RESPONSABLE.
QUEDA PROHIBIDO CORREGIR ESTE PLANO SIN AUTORIZACION DE ESTA UNIDAD.

ALL DIMENSIONS IN BRACKETS [ ] ARE MILLIMETER; EXPRESSED DIMENSIONS ARE INCHES

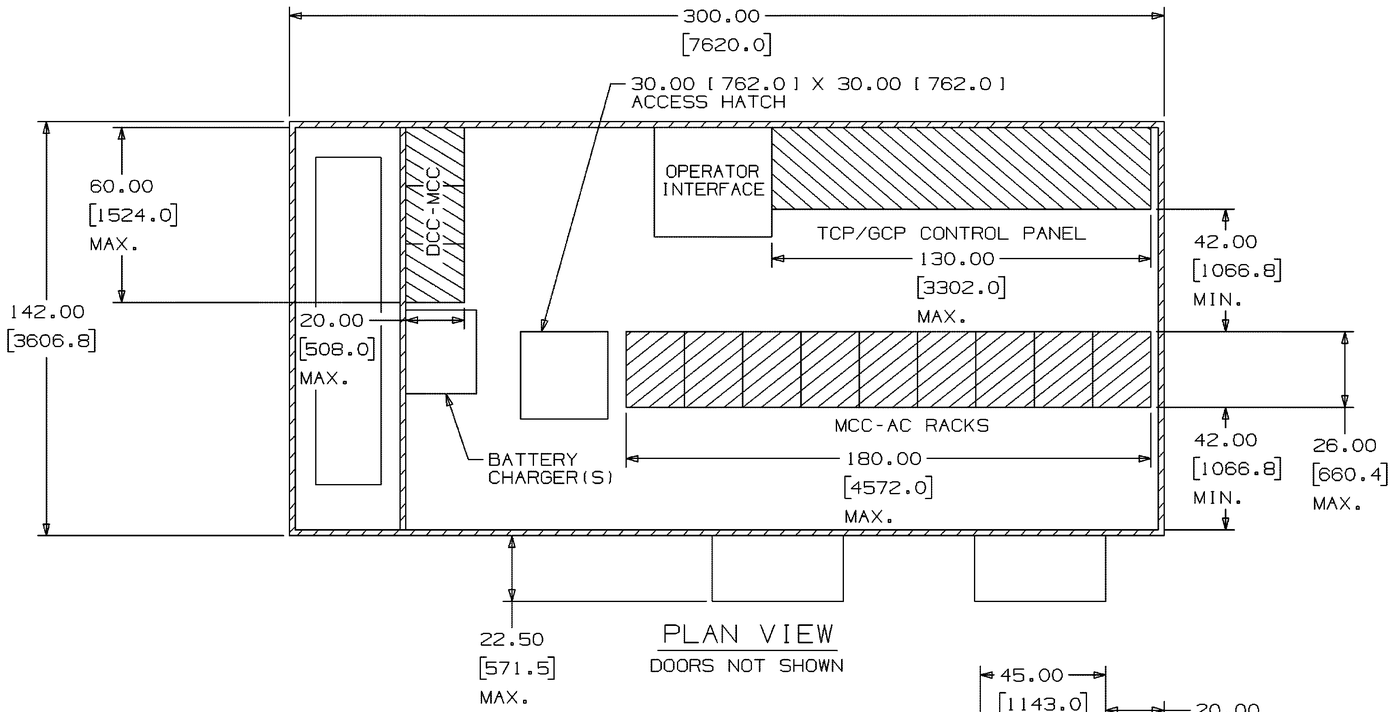

PLAN VIEW

DOORS NOT SHOWN

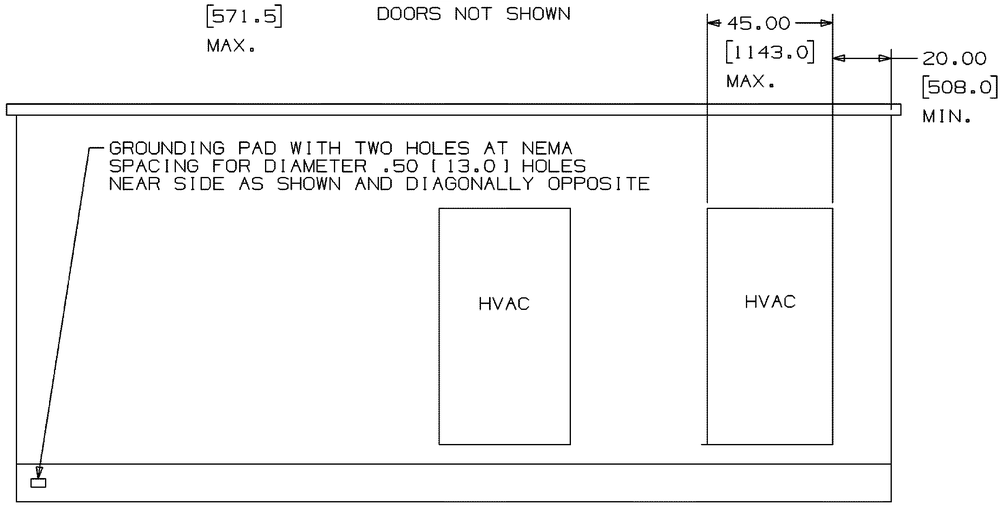

ELEVATION VIEW

DOORS NOT SHOWN

REV.	FECHA	REVISIONES O MODIFICACIONES	DIBUJO	REVISO	APROBO
0	06/07/11	ISSUED FOR CONSTRUCTION, SEE NOTE 10 SHEET 1	SAB	CB	TK

REF. FABRICANTE		
REF. FABRICANTE	FABRICANTE	O/C:

333

PACKAGED ELECTRICAL & ELECTRONIC CONTROL CENTER

N° DE DOCUMENTO	DESCRIPCIÓN	REV.	FECHA
AGM-02-0204-PLA-E-0006	CABLE SUMMARY		
AGM-02-0204-PLA-M-0041	WATER INJECTION SKID – GENRAL ARRANGEMENT		
AGM-02-0204-PLA-G-0057	PLOT PLAN	0	16/06/11

DOCUMENTOS DE REFERENCIA

DERWICK ENGINEERING ASSOCIATES CORP. | ProEnergy SERVICES | CORPOELEC CORPORACIÓN ELÉCTRICA NACIONAL | La Electricidad de Caracas | GERENCIA FUNCIONAL DE INGENIERÍA Y PROYECTOS | SENECA

AMPLIACIÓN DE LA CAPACIDAD DE GENERACIÓN Y TRANSPORTE DE ELECTRICIDAD EN LA ISLA DE MARGARITA

OUTLINE – GT PACKAGE CONNECTION ELECTRICAL DUAL FUEL MOD. UNITS 298034 & 298035 (MLI 0301)

PLANO N°:	REV:		
PROYECTO N°: 409-2956-1			
CALCULO:	PROYECTO:	ESCALA: NONE	PLANO No: AGM-02-0204-PLA-E-0002
REVISADO: C. Brown	CALCULO:	FECHA: 06/07/11	
DIBUJO: S. Boerckel	REVISADO: J. Castillo	DISK. N°	
APROBADO: T. Koontz	DIBUJO:	ESC./PLOTEO:	REV. 0
ARCHIVO:	APROBADO: M. Monticelli	ARCHIVO:	PAGINA: 15 DE: 16

F_A1_11 – 841x594mm

N° PLANO: AGM-02-0204-PLA-E-0002 0

IMPORTANTE

ESTE PLANO FUE ELABORADO EN AUTOCAD V.2008
CUALQUIER MODIFICACION REALIZADA EN CAMPO DEBERA SER NOTIFICADO A LA UNIDAD RESPONSABLE.
QUEDA PROHIBIDO CORREGIR ESTE PLANO SIN AUTORIZACION DE ESTA UNIDAD.

ALL DIMENSIONS IN BRACKETS [ ] ARE MILLIMETER; EXPRESSED DIMENSIONS ARE INCHES

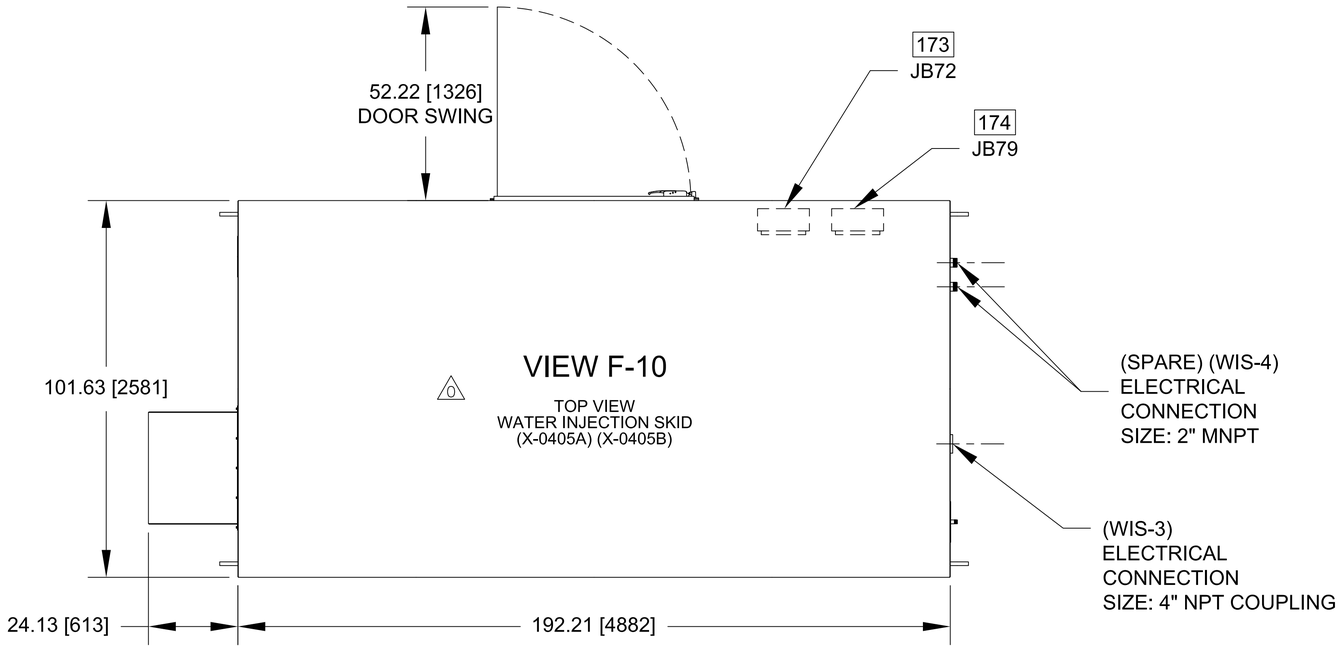

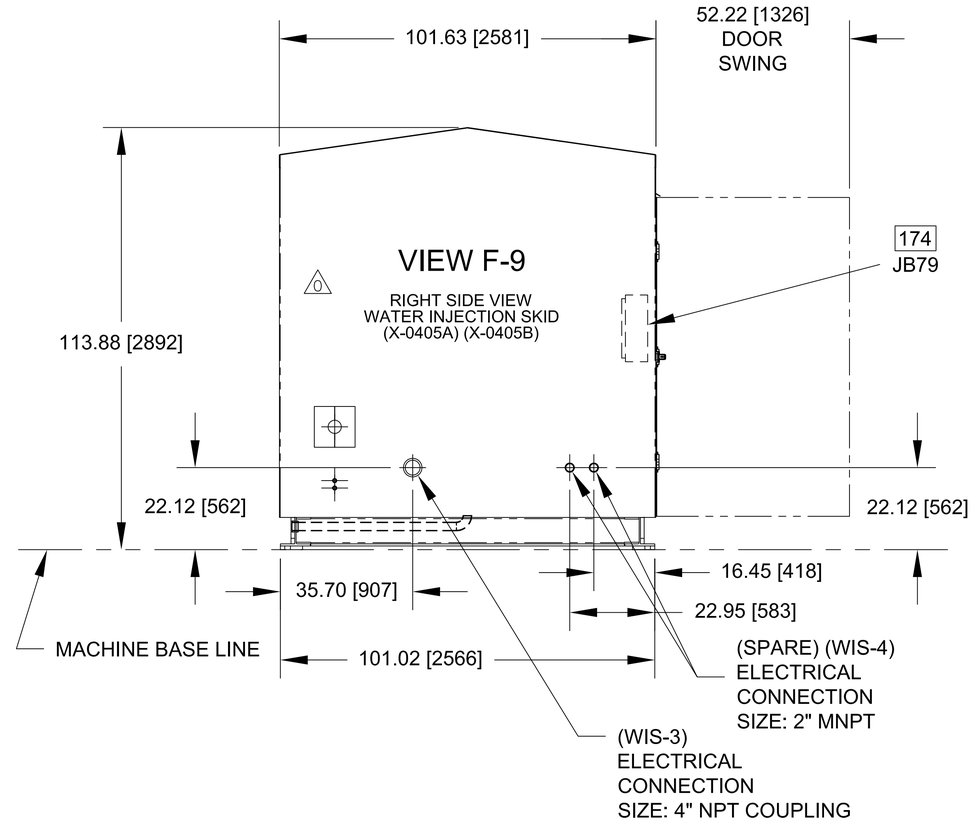

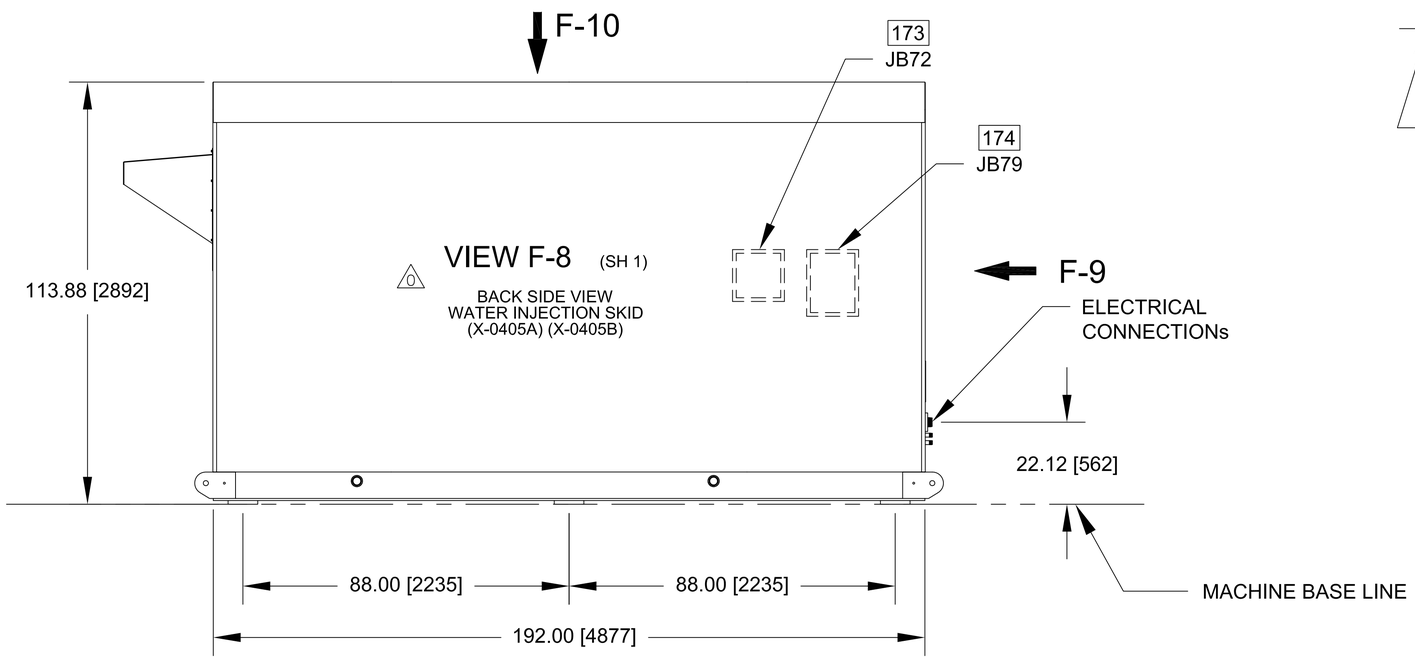

N° DE DOCUMENTO	DESCRIPCIÓN	REV.	FECHA
AGM-02-0204-PLA-E-0006	CABLE SUMMARY		
AGM-02-0204-PLA-M-0041	WATER INJECTION SKID – GENRAL ARRANGEMENT		
AGM-02-0204-PLA-G-0057	PLOT PLAN	0	16/06/11

DOCUMENTOS DE REFERENCIA

REV.	FECHA	REVISIONES O MODIFICACIONES	DIBUJO	REVISO	APROBO
0	06/07/11	ISSUED FOR CONSTRUCTION, SEE NOTE 10 SHEET 1	SAB	CB	TK

REF. FABRICANTE		
REF. FABRICANTE	FABRICANTE	O/C:

DERWICK ASSOCIATES COMP. · ProEnergy SERVICES · CORPOELEC CORPORACIÓN ELÉCTRICA NACIONAL · La Electricidad de Caracas · GERENCIA FUNCIONAL DE INGENIERIA Y PROYECTOS · SENECA

AMPLIACIÓN DE LA CAPACIDAD DE GENERACIÓN Y TRANSPORTE DE ELECTRICIDAD EN LA ISLA DE MARGARITA

OUTLINE – GT PACKAGE CONNECTION ELECTRICAL
DUAL FUEL MOD. UNITS 298034 & 298035
(MLI 0301)

PLANO N°:	REV:		
PROYECTO N°: 409-2956-1			
CALCULO:	PROYECTO:	ESCALA: NONE	PLANO No:
REVISADO: C. Brown	CALCULO:	FECHA: 06/07/11	AGM-02-0204-PLA-E-0002
DIBUJO: S. Boerckel	REVISADO: J. Castillo	DISK. N°	
APROBADO: T. Koontz	DIBUJO:	ESC./PLOTEO:	REV. 0
ARCHIVO:	APROBADO: M. Monticelli	ARCHIVO:	PAGINA: 16 DE: 16

F_A1_11 – 841x594mm

CORPOELEC CORPORACIÓN ELÉCTRICA NACIONAL	La Electricidad de Caracas	la nueva SENECA Iluminando el camino al Socialismo	DERWICK DERWICK ASSOCIATES CORP.

AMPLIACIÓN DE LA CAPACIDAD DE GENERACIÓN Y TRANSPORTE DE ELECTRICIDAD EN LA ISLA DE MARGARITA

SERVICIO DE ADECUACIÓN A SISTEMA DUAL DE DOS (2) UNIDADES, MARCA GENERAL ELECTRIC, MODELO 7001EA QUE SERÁN INSTALADAS EN LA PLANTA JUAN BAUTISTA ARISMENDI

NOTE: THIS DRAWING IS BASED ON THE ORIGINAL CABLE SUMMARY DRWG 377A4380 REV-C AND MODIFIED FOR DUAL FUEL AND SITE SPECIFIC REQUIRMENTS.

CABLE SUMMARY (GAS TURBINE)

CUSTOMER: EDC MARGARITA ISLAND

(UNITS 298034 & 298035)

AGM-02-0204-PLA-E-0006

Rev.	Fecha	Breve Descripción del Cambio	Total Pág.	Elab. por DERWICK	Rev. por DERWICK	Aprob. por EDC
1	05/08/11	ISSUED FOR CONSTRUCTION	31	Domingo Guzmán	Iker Candina	
0	10/03/2011	ISSUED FOR CONSTRUCTION	31	Domingo Guzmán	Iker Candina	

REVISADO POR DERWICK:	APROBADO POR DERWICK:	REVISADO POR EDC:	APROBADO POR EDC
FIRMA:	FIRMA:	FIRMA:	FIRMA:
NOMBRE: Domingo Guzmán	NOMBRE: Iker Candina	NOMBRE:	NOMBRE:

NOTES

1. "C" PREFIX INDICATES CABLE SUPPLIED BY OTHERS THAN GE GAS TURBINE DIVISION. CONTROL CABLES WITH "C" PREFIX CONTAIN A NOMINAL NUMBER OF SPARES.

2. "C" PREFIX CABLES TO BE RATED NOT LESS THAN 90 DEG. C.

3. CABLE GLANDS/STRESS RELIEFS FOR CONNECTING CABLES AT JUNCTION BOXES/DEVICES ARE TO BE SUPPLIED BY OTHERS.

4. BEND RADIUS - ALL BENDS SHALL BE SO MADE THAT THE CABLE WILL NOT BE DAMAGED, AND THE RADIUS OF THE INNER EDGE OF ANY BEND SHALL NOT BE LESS THAN SHOWN IN TABLE. THIS RADIUS DOES NOT INCLUDE PULLING TENSION CALCULATION. SEE M.L. ITEM 0435 FOR FURTHER DEFINITION.

5. CABLES SUPPLIED BY OTHERS THAT ARE SHOWN ON THIS DWG. ARE ONLY FOR THOSE WHICH INTERFACE WITH GAS TURBINE SUPPLIED EQUIPMENT.

6. MAKEUP OF *"C'* PREFIX CABLES ARE SUGGESTED TO ENSURE SUFFICIENT CONDUCTOR COUNT.

7. "C" PREFIX CABLES FOR LEVEL 4 AND LEVEL 5 POWER SUPPLY ARE SIZED BY OTHERS.

8. SEE OUTLINE, GAS TURBINE PACKAGE CONNECTION - ELECTRICAL DIAG., M.L. ITEM 0301 FOR LOCATION OF CABLE DESTINATION POINTS (JB'S, ETC.) WITHIN EACH ON-BASE COMPARTMENT.

9. CABLE TO BE INSTALLED WITH ADEQUATE SEPARATION BETWEEN DIFFERENT LEVELS AND IN PROPER CONDUIT OR RACEWAY MATERIAL, SEE M.L. ITEM 0435, AND IN ACCORDANCE WITH LATEST ELECTRICAL CODES.

10. GROUND CABLES ARE TO BE SUPPLIED ON ALL EQUIPMENT. TWO CABLE CONNECTIONS ARE DIAGONALLY OPPOSED.

11. ONE CABLE REQUIRED PER SITE.

12. CABLE REQUIRED FOR UNITS 1 & 3 ONLY.

13. CABLE REQUIRED FOR UNITS 2 & 4 ONLY.

14. FOR ADDITIONAL COMMUNICATION CABLES SEE M.L. ITEM 4108.

15. REFER TO DWG. 358B1001 FOR CABLE ROUTING.

LOCATION DESCRIPTIONS

001 - WELDING RECEPTACLE ONE
101 - TURBINE CONTROL PANEL (333)
102 - GENERATOR CONTROL PANEL (333)
108 - AUXILIARY RELAY PANEL
114 - JB001 ACCESSORY BASE LOW LEVEL (119)
115 - JB002 ACCESSORY BASE LEVEL3(119)
118 - ACCESSORY BASE MOTORS (119)
119 - ACCESSORY BASE
    114 - JB001 ACCESSORY BASE LOW LEVEL
    115 - JB002 ACCESSORY BASE LEVEL 3
    118 - ACCESSORY BASE MOTORS
    149 - CRANKING MOTOR
    348 - JB077A ACCESSORY BASE FP
    392 - JB004 ACCESSORY BASE LEVEL 4
121 - TURBINE BASE
    122 - TURBINE ROOF MOUNTED DEVICES
    125 - JB055 TURBINE BASE LOW LEVEL
    126 - JB056 TURBINE BASE LOW LEVEL
    390 - JB034 TURBINE ROOF LOW LEVEL
122 - TURBINE ROOF MOUNTED DEVICES (121)
125 - JB055 TURBINE BASE LOW LEVEL (121)
126 - JB056 TURBINE BASE LOW LEVEL (121)
127 - JB085 LOAD GEAR COMPARTMENT LOW LEVEL (250)
128 - EXHAUST FRAME BLOWER 88TK-1
129 - EXHAUST FRAME BLOWER 88TK-2
133 - JB005C GENERATOR COMPARTMENT LEVEL 4 (134)
134 - GENERATOR COMPARTMENT
    133 - JB005C GENERATOR COMPARTMENT LEVEL 4
    135 - JB005A GENERATOR COMPARTMENT LOW LEVEL
    136 - JB005B GENERATOR COMPARTMENT LEVEL 3
    325 - JB163 GENERATOR COMPARTMENT LOW LEVEL
135 - JB005A GENERATOR COMPARTMENT LOW LEVEL (134)
136 - JB005B GENERATOR COMPARTMENT LEVEL 3 (134)
146 - METAL CLAD SWITCHGEAR
149 - CRANKING MOTOR (119)
151 - JB215 GENERATOR FILTER SEQUENCER
156 - FUEL GAS FLOW DEVICES
157 - TURBINE AIR INLET FILTER COMPARTMENT
    449 - JB078 TURB. AIR INLET FILTER COMPARTMENT
158 - GAS SCRUBBER
    563 - JB386 GAS SCRUBBER LEVEL 3
161 - COOLING WATER MODULE #1
    428 - JB090 COOLING WATER MODULE LEVEL 3
    438 - JB090A COOLING WATER MODULE LEVEL 4
171 - GAS FUEL (VALVE) MODULE
    363 - JB130 GAS FUEL MODULE
    441-JB131 GAS FUEL MODULE LEVEL4

172 - AIR PROCESS SKID
455 - JB297 AIR PROCESS SKID LEVEL 3
173 – JB72 WATER INJECTION SKID LEVEL 3
LOCATION DESCRIPTIONS (continued)

174 – JB79 WATER INJECTION SKID LEVEL 1
175 – WATER INJECTION SKID 480 VOLT SUPPLY
176 - LUBE OIL DEMISTER (TURBINE)
182 - MAIN TRANSFORMER (STEP UP)
183 - AUXILIARY POWER TRANSFORMER
201 - LIMIT AMP
208 - VIBRATION MONITOR PANEL (102) (333)
225 - RELATIVE HUMIDITY SENSOR
227 - HAZARDOUS GAS MONITOR (102) (333)
230 - JB019A TURBINE OFF BASE RACK LEVEL 3
231 - JB019B TURBINE OFF BASE RACK LEVEL 3
233 - JB020A TURBINE OFF BASE RACK LOW LEVEL
234 - JB020B TURBINE OFF BASE RACK LOW LEVEL
236 – TURBINE ROOF LOW LEVEL
250 - LOAD GEAR COMPARTMENT
127 - JB085 LOAD GEAR COMPARTMENT LOW LEVEL
387 - JB020G TURBINE COMPARTMENT LOW LEVEL
252 - WATER WASH SKID
456-JB010 WATERWASHSKID LEVEL3
254 - CUSTOMER DEVICES--PANELS
257 - JB037 PERFORMANCE MONITORING LOW LEVEL
280 - GENERATOR NEUTRAL ACCESSORY COMPARTMENT GNAC
581 - JB005N GEN. NEUTRAL ACCESSORIES COMP. LEVEL 3
283 - FIRE PROTECTION DEVICES
284 - FIRE PROTECTION PANEL
325 - JB163 GENERATOR COMPARTMENT LOW LEVEL (134)
329 - CRANKING MOTOR TRANSFORMER
333 - PACKAGED ELECTRICAL-ELECTRONIC CONTROL CENTER-PEECC
101 - TURBINE CONTROL PANEL
102 - GENERATOR CONTROL PANEL
208 - VIBRATION MONITOR PANEL
227 - HAZARDOUS GAS MONITOR
334 - PEECC MOTOR CONTROL CENTER
339 - JB298 PEECC LEVEL 3
562 - STATIC VOLTAGE REGULATOR--EX2000R
334 - PEECC MOTOR CONTROL CENTER (333)
335 - BUS DUCT
338 - CUSTOMER 480V SUPPLY
339 - JB298 PEECC LEVEL 3 (333)
348 - JB077A ACCESSORY BASE FP (119)
363 - JB130 GAS FUEL MODULE (171)
381 - JB021A TURBINE OFF BASE RACK LEVEL 4
387 - JB020G TURBINE COMPARTMENT LOW LEVEL (250)
390 - JB034 TURBINE ROOF LOW LEVEL (121)
392 - JB004 ACCESSORY BASE LEVEL 4 (119)
427 – LIQUID FUEL FORWARDING SKID JB01
428 - JB090 COOLING WATER MODULE LEVEL 3 (161)

429 – 88AB-1 MCC CUBICLE
430 – DEMIN WATER FORWARDING JB01

LOCATION DESCRIPTIONS (continued)

438 - JB090A COOLING WATER MODULE LEVEL 4 (161)
441 - JB131 GAS FUEL MODULE LEVEL 4 (171)
447 - INLET HEATING CONTROL VALVE
449 - JB078 TURB. AIR INLET FILTER COMPARTMENT (157)
455 - JB297 AIR PROCESS SKID LEVEL 3 (172)
456 - JB010 WATER WASH SKID LEVEL 3 (252)
514 - CUSTOMER SWITCHGEAR
562 - STATIC VOLTAGE REGULATOR--EX2000R (333)
563 - JB386 GAS SCRUBBER LEVEL 3 (158)
581 - JB005N GEN. NEUTRAL ACCESSORIES COMP. LEVEL 3 (280)
611 - INLET HEATING ISOLATION VALVE
622 - FUEL GAS HEATER CONTROL PANEL
742 - SITE LIGHTS
751 - FLAME DETECTOR INTERFACE MODULE PRIMARY
752 - FLAME DETECTOR INTERFACE MODULE SECONDARY
753 - JB309 FUEL GAS HEATING SKID LEVEL 3
901 - CUSTOMER GROUND GRID
938 - CEMS SYSTEM
939 – UNIT AREA OUTDOOR LIGHTING
940 – DEMIN WATER FORWARDING JB02
941 – LIQUID FUEL FORWARDING JB02
942 – CUSTOMER SUPPLIED MCC

CUSTOMER SUPPLIED CABLES

cable number	from	to	level / #cond	diameter / bend rad	gauge	makeup	purpose	special notes
C001	101	136	LEVEL (3) \ 19 COND		12 AWG	1 CABLE	CONTROL SIGNALS	
C006	101	363	LEVEL (1) \ 36 COND		18 AWG	1 CABLE-18 TW SHLD PAIRS	INSTRUMENTATION SIGNALS	
C009A	234	751	LEVEL (3S) \ 8 COND		18 AWG	1 CABLE-4 TW SHLD PAIRS	FLAME DETECTORS 28FD (2 WIRE)	
C009B	234	752	LEVEL (3S) \ 8 COND		18 AWG	1 CABLE-4 TW SHLD PAIRS	FLAME DETECTORS 28FD (2 WIRE)	
C012	334	392	LEVEL (4) \ 3 COND		4 AWG	1 CABLE	125VDC SUPPLY 88QE-1	15
C013C	334	392	LEVEL (4) \ 3 COND		10 AWG	1 CABLE	3 PH SUPPLY 88TM-1	15
C014	101	363	LEVEL (3) \ 37 COND		12 AWG	1 CABLE	CONTROL SIGNALS	
C017	101	135	LEVEL (1) \ 36 COND		18 AWG	1 CABLE-18 TW SHLD PAIRS	INSTRUMENTATION SIGNALS RTDS	
C018	101	135	LEVEL (1S) \ 18 COND		18 AWG	1 CABLE-9 PAIR CHROM-ALUM T/C	THERMOCOUPLES	
C022	227	363	LEVEL (2) \ 9 COND		18 AWG	1 CABLE-3 TW SHLD TRIADS	GAS DETECTORS 45HA-7 45HA-8	
C027	118	334	LEVEL (4) \ 3 COND		2 AWG	1 CABLE	3 PH SUPPLY 88QA-1	15
C028	334	392	LEVEL (4) \ 3 COND		8 AWG	1 CABLE	3 PH SUPPLY 88HQ-1	15
C037	101	115	LEVEL (3) \ 37 COND		12 AWG	1 CABLE	CONTROL SIGNALS	15
C038	101	234	LEVEL (1) \ 36 COND		18 AWG	1 CABLE-18 TW SHLD PAIRS	INSTRUMENTATION SIGNALS	
C039	101	233	LEVEL (1S) \ 18 COND		18 AWG	1 CABLE-9 PAIR CHROM-ALUM T/C	THERMOCOUPLES	
C041	101	233	LEVEL (1S) \ 18 COND		18AWG	1 CABLE-9 PAIR CHROM-ALUM T/C	THERMOCOUPLES	
C042	101	230	LEVEL (3) \ 19 COND		12 AWG	1 CABLE	CONTROL SIGNALS	
C049	102	146	LEVEL (3) \ 37 COND		12 AWG	1 CABLE	CONTROL SIGNALS GEN BREAKER	15
C055A	334	381	LEVEL (4) \ 3 COND		8 AWG	1 CABLE	3 PH SUPPLY 23HT-1	
C055B	334	381	LEVEL (4) \ 3 COND		8 AWG	1 CABLE	3 PH SUPPLY 23HT-2	
C059	133	334	LEVEL (4) \ 3 COND		10 AWG	1 CABLE	3 PH SUPPLY 23HG-1,-3,-5	
C071	128	334	LEVEL (4) \ 3 COND			SIZED BY CUSTOMER	3 PH SUPPLY 88TK-1	
C072	129	334	LEVEL (4) \ 3 COND			SIZED BY CUSTOMER	3 PH SUPPLY 88TK-2	
C073	101	387	LEVEL (1S) \ 36 COND		18 AWG	1 CABLE-18 PAIR CHROM-ALUM T/C	THERMOCOUPLES	15
C074	101	387	LEVEL (1S) \ 36 COND		18 AWG	1 CABLE-18 PAIR CHROM-ALUM T/C	THERMOCOUPLES	15
C076	101	135	LEVEL (1) \ 18 COND		18 AWG	1 CABLE-9 TW SHLD PAIRS	INSTRUMENTATION SIGNALS	
C077	146	334	LEVEL (4) \ 3 COND		8 AWG	1 CABLE	3 PH SUPPLY	15
C080	146	335	LEVEL (3) \		12 AWG	1 CABLE	23BD-1	

CUSTOMER SUPPLIED CABLES

cable number	from	to	level / #cond	diameter / bend rad	gauge	makeup	purpose	special notes
			3 COND					
C083	102	146	LEVEL (3) \ 12 COND		10 AWG	1 CABLE	VT SIGNALS	15
C094B	135	562	LEVEL (1)\ 8 COND		18 AWG	1 CABLE-4 TW SHLD PAIRS	SIGNAL (64F)	
C096	101	363	LEVEL (1) \ 36 COND		18 AWG	1 CABLE-18 TW SHLD PAIRS	INSTRUMENTATION SIGNALS	
C102	334	392	LEVEL (4) \ 3 COND		8 AWG	1 CABLE	3 PH SUPPLY 23QT-1,-2	15
C117A	125	208	LEVEL (1) \ 18 COND		18 AWG	1 CABLE-6 TW SHLD TRIADS	PROXIMITORS	
C117B	126	208	LEVEL (1) \ 18 COND		18 AWG	1 CABLE-6 TW SHLD TRIADS	PROXIMITORS	15
C117C	127	208	LEVEL (1) \ 9 COND		18 AWG	1 CABLE-3 TW SHLD TRIADS	PROXIMITORS	15
C123	136	562	LEVEL (3) \ 6 COND		10 AWG	1 CABLE	64F EXCITER FIELD	15
C125	334	392	LEVEL (4) \ 5 COND		10 AWG	1 CABLE	3 PH SUPPLY 23HA-3 & 23HT-3	15
C128	101	231	LEVEL (3) \ 6 COND		12 AWG	1 CABLE	26HT-1,-3	
C135	284	348	LEVEL (2S) \ 18 COND		18 AWG	1 CABLE-9 TW SHLD PAIRS	FIRE DETECTORS CIRCUIT (A)	
C136	284	348	LEVEL (2S) \ 18 COND		18 AWG	1 CABLE-9 TW SHLD PAIRS	FIRE DETECTORS CIRCUIT (B)	
C145	208	325	LEVEL (1) \ 18 COND		18 AWG	1 CABLE-6 TW SHLD TRIADS	PROXIMITORS	15
C148	146	562	LEVEL (3) \ 4 COND		10 AWG	1 CABLE	CONTROL CURRENT TRANSFORMERS	15
C149	334	441	LEVEL (4) \ 3 COND		8 AWG	1 CABLE	1 PH SUPPLY 23VS-1	
C161	115	339	LEVEL (3) \ 12 COND		10 AWG	1 CABLE	MOTOR HEATERS, AC LIGHTS	15
C171	227	234	LEVEL (2) \ 9 COND		18 AWG	1 CABLE-3 TW SHLD TRIADS	GAS DETECTORS 45HT-1, 45HT-2	
C172	114	201	LEVEL (1) \ 18 COND		18 AWG	1 CABLE-6 TW SHLD TRIADS	RTDS 88CR-1	
C182	101	231	LEVEL (3) \ 12 COND		12 AWG	1 CABLE	20TW DEVICES	
C190	128	339	LEVEL (3) \ 2 COND		10 AWG	1 CABLE	MOTOR HEATER 23TK-1	
C191	101	128	LEVEL (3) \ 3 COND		12 AWG	1 CABLE	63TK-1	
C192	129	339	LEVEL (3) \ 2 COND		10 AWG	1 CABLE	MOTOR HEATER 23TK-2	
C193	101	129	LEVEL (3) \ 3 COND		12 AWG	1 CABLE	63TK-2	
C199	122	334	LEVEL (4) \ 3 COND		8 AWG	1 CABLE	3 PH SUPPLY 88BT-1	
C199A	122	339	LEVEL (3) \ 2 COND		10 AWG	1 CABLE	MOTOR HEATER 23BT-1	
C200	101	233	LEVEL (1S) \ 36 COND		18 AWG	1 CABLE-18 PAIR CHROM-ALUM T/C	THERMOCOUPLES	
C201	101	390	LEVEL (1) \ 8 COND		18 AWG	1 CABLE-4 TW SHLD PAIRS	96CD-1A, 96CD-1B, 96CD-1C	
C216	339	363	LEVEL (3) \ 3 COND		12 AWG	1 CABLE	AC LIGHTS	

CUSTOMER SUPPLIED CABLES

cable number	from	to	level / #cond	diameter / bend rad	gauge	makeup	purpose	special notes
C217	339	363	LEVEL (3) \ 2 COND		10 AWG	1 CABLE	DC STANDBY LIGHTING	
C219	136	339	LEVEL (3) \ 12 COND		12 AWG	1 CABLE	LIGHTS - RECEPTACLES	
C235A	102	146	LEVEL (3) \ 12 COND		10 AWG	1 CABLE	CURRENT TRANSFORMERS 21-23, 60-62	15
C235B	102	146	LEVEL (3) \ 12 COND		10 AWG	1 CABLE	CURRENT TRANSFORMERS 27-29, 48-50	15
C235C	108	146	LEVEL (3) \ 12 COND		10 AWG	1 CABLE	CURRENT TRANSFORMERS 24-26	
C236A	102	581	LEVEL (3) \ 12 COND		10 AWG	1 CABLE	CURRENT TRANSFORMERS 1-9, NGR	15
C236B	102	581	LEVEL (3) \ 12 COND		10 AWG	1 CABLE	CURRENT TRANSFORMERS 7-9	15
C236C	102	146	LEVEL (3) \ 12 COND		10 AWG	1 CABLE	CURRENT TRANSFORMERS 30-32	15
C237	146	334	LEVEL (4) \ 2 COND		6 AWG	SINGLE CONDUCTORS	125VDC BREAKER CLOSE CIRCUIT	15
C249	339	581	LEVEL (3) \ 3 COND		10 AWG	1 CABLE	23HG-20	15
C251	334	392	LEVEL (4) \ 3 COND		6 AWG	1 CABLE	3 PH. SUPPLY – IGNITION TRANSFORMERS	
C256	101	230	LEVEL (3) \ 3 COND		10 AWG	1 CABLE	120VAC SUPPLY – IGNITION TRANSFORMERS	
C257	101	231	LEVEL (3) \ 12 COND		12 AWG	1 CABLE	CONTROL SIGNALS	
C270	115	339	LEVEL (3) \ 12 COND		12 AWG	1 CABLE	LIGHTS, 26QL-1	15
C285	101	363	LEVEL (1S) \ 6 COND		18 AWG	1 CABLE-3 PAIR CHROM-ALUM T/C	THERMOCOUPLES FTG-1A,-1B,-2A,-2B	
C401	183	254	LEVEL (4) \ 3 COND			SIZED BY CUSTOMER	480V TO CUSTOMER UNIT #1	11
C402	334	939	LEVEL (4) \ 3 COND			SIZED BY CUSTOMER	480V UNIT LIGHTING	
C403	334	742	LEVEL (4) \ 3 COND			SIZED BY CUSTOMER	480V SITE LIGHTING	
C404	334	938	LEVEL (4) \ 3 COND			SIZED BY CUSTOMER	480V CEM LOADS	
C406	182	334	LEVEL (4) \ 3 COND			SIZED BY CUSTOMER	480V ALTERNATIVE POWER TO STEPUP TRANS. COOLING	13
C407	182	334	LEVEL (4) \ 3 COND			SIZED BY CUSTOMER	480V NORMAL POWER TO STEPUP TRANS. COOLING	12
C408	001	334	LEVEL (4) \ 3 COND			SIZED BY CUSTOMER	480V WELDING OUTLETS	
C409A	182	334	LEVEL (3) \ 2 COND		10 AWG	1 CABLE	125VDC TO LOAD BREAK CKT SWITCHER	12
C409B	182	334	LEVEL (3) \ 2 COND		10 AWG	1 CABLE	125VDC TO TRANSFORMER ANNUNCIATOR	13
C410A	254	334	LEVEL (3) \ 2 COND		10 AWG	1 CABLE	125VDC H2235 RELAY RACK IN ROCS TRAILER REGULAR	12
C410B	254	334	LEVEL (3) \ 2 COND		10 AWG	1 CABLE	125VDC H2235 RELAY RACK IN ROCS TRAILER BACKUP	13
C411	183	622	LEVEL (4) \ 3 COND			SIZED BY CUSTOMER	480V SUPPLY TO GAS HEATER CONTROL PANEL	
C413	622	753	LEVEL (3) \ 6 COND		18 AWG	1 CABLE-3 PAIR CHROM-ALUM T/C	THERMOCOUPLES	

CUSTOMER SUPPLIED CABLES

cable number	from	to	level / #cond	diameter / bend rad	gauge	makeup	purpose	special notes
C414	622	753	LEVEL (3) \ 3 COND		12 AWG	1 CABLE	GAS FUEL HEATER EMERGENCY STOP	
C414A	101	622	LEVEL (1) \ 6 COND		12 AWG	1 CABLE	FUEL GAS HEATER CONTROLS	
C415	183	338	LEVEL (4) \ 3 COND			SIZED BY CUSTOMER	480V SUPPLY TO AUX	
C417A	102	102	LEVEL (3) \ 12 COND		10 AWG	1 CABLE	CT'S 7-9 & 30-31 SIGNALS GCP UNIT #2 TO GCP UNIT #1	11
C418A	102	102	LEVEL (3) \ 12 COND		10 AWG	1 CABLE	CT'S 27-29 & 48-50 SIGNALS GCP UNIT #2 TO GCP UNIT #1	
C420A	102	254	LEVEL (3) \ 4 COND		10 AWG	1 CABLE	CUSTOMER CT'S 39-41 TO 87T	13
C420B	102	254	LEVEL (3) \ 4 COND		10 AWG	1 CABLE	CUSTOMER CT'S 42-44 TO 87U	12
C421	108	108	LEVEL (3) \ 12 COND		12 AWG	1 CABLE	EVEN UNIT TO ODD UNIT CONTACTS	
C421A	108	108	LEVEL (3) \ 12 COND		12 AWG	1 CABLE	ODD UNIT TO EVEN UNIT CONTACTS	
C421B	108	108	LEVEL (3) \ 12 COND		12 AWG	1 CABLE	EVEN UNIT TO ODD UNIT CONTACTS	
C421C	108	108	LEVEL (3) \ 12 COND		12 AWG	1 CABLE	ODD UNIT TO EVEN UNIT CONTACTS	
C422	108	108	LEVEL (3) \ 6 COND		12 AWG	1 CABLE	ODD UNIT TO EVEN UNIT CONTACTS	
C422A	108	108	LEVEL (3) \ 6 COND		12 AWG	1 CABLE	EVEN UNIT TO ODD UNIT CONTACTS	
C426	108	254	LEVEL (1) \ 12 COND		18 AWG	1 CABLE-6 TW SHLD PAIRS	96GR-1, 96AW-1, 96GV-2, 96GV-3, 96GV-1	
C426A	108	254	LEVEL (1) \ 3 COND		18 AWG	1 CABLE-1 TW SHLD TRIAD	96GG-2	
C428	101	146	LEVEL (3) \ 6 COND		12 AWG	1 CABLE	52G FAN ALARMS	
C473	101	387	LEVEL (1) \ 2 COND		18 AWG	1 CABLE-1 TW SHLD PAIR	39V-3A	15
C474	101	387	LEVEL (1) \ 2 COND		18 AWG	1 CABLE-1 TW SHLD PAIR	39V-3B	15
C480	334	514	LEVEL (3) \ 3 COND		12 AWG	1 CABLE	120VAC FOR CUSTOMER AUX POWER SUBSTATION COMPARTMENT	
C481	334	514	LEVEL (3) \ 2 COND		10 AWG	1 CABLE	125VDC FOR CUSTOMER AUX POWER SUBSTATION	
C512	101	449	LEVEL (3) \ 7 COND		12 AWG	1 CABLE	CONTROL SIGNALS	
C513A	101	157	LEVEL (1S) \ 2 COND		18 AWG	1 CABLE-1 CHROM-ALUM T/C PAIR	AT-ID-1 THERMOCOUPLE	
C513B	101	157	LEVEL (1S) \ 2 COND		18 AWG	1 CABLE-1 CHROM-ALUM T/C PAIR	AT-ID-2 THERMOCOUPLE	
C513C	101	157	LEVEL (1S) \ 2 COND		18 AWG	1 CABLE-1 CHROM-ALUM T/C PAIR	AT-ID-3 THERMOCOUPLE	
C515	339	449	LEVEL (3) \ 3 COND		6 AWG	1 CABLE	120/240VAC SUPPLY	
C516A	101	447	LEVEL (3) \ 2 COND		12 AWG	1 CABLE	20TH-1	
C516E	101	611	LEVEL (3) \ 2 COND		12 AWG	1 CABLE	33TH-3	

CUSTOMER SUPPLIED CABLES

cable number	from	to	level / #cond	diameter / bend rad	gauge	makeup	purpose	special notes
C517A	101	447	LEVEL (1) \ 2 COND		18 AWG	1 CABLE-1 TW SHLD PAIR	96TH-1	
C517B	101	447	LEVEL (1) \ 2 COND		18 AWG	1 CABLE-1 TW SHLD PAIR	65EP-3	
C517D	101	447	LEVEL (1) \ 2 COND		18 AWG	1 CABLE-1 TW SHLD PAIR	96BH-1	
C517E	101	447	LEVEL (1) \ 2 COND		18 AWG	1 CABLE-1 TW SHLD PAIR	96BH-2	
C531	101	428	LEVEL (3) \ 6 COND		12 AWG	1 CABLE	CONTROL SIGNALS	
C532	339	428	LEVEL (3) \ 12 COND		12 AWG	1 CABLE	CONTROL SIGNALS	
C533	334	438	LEVEL (4) \ 3 COND			SIZED BY CUSTOMER	3 PH. SUPPLY 88FC-1	
C534	334	438	LEVEL (4) \ 3 COND			SIZED BY CUSTOMER	3 PH. SUPPLY 88FC-2	
C535	334	438	LEVEL (4) \ 3 COND			SIZED BY CUSTOMER	3 PH. SUPPLY 88FC-3	
C537	334	438	LEVEL (4) \ 3 COND			SIZED BY CUSTOMER	3 PH. SUPPLY 88WC-1	
C538	334	438	LEVEL (4) \ 3 COND			SIZED BY CUSTOMER	3 PH. SUPPLY 88WC-2	
C544	339	428	LEVEL (3) \ 12 COND		10 AWG	1 CABLE	MOTOR HEATERS	
C549	102	254	LEVEL (1) \ 18 COND		18 AWG	1 CABLE-6 TW SHLD TRIADS	METERING	
C549A	108	254	LEVEL (1) \ 18 COND		18 AWG	1 CABLE-6 TW SHLD TRIADS	METERING	
C550A	101	254	LEVEL (3) \ 19 COND		12 AWG	1 CABLE	DIGITAL CONTROL SIGNALS OUT	
C550B	101	254	LEVEL (3) \ 19 COND		12 AWG	1 CABLE	DIGITAL CONTROL SIGNALS OUT	
C550C	101	254	LEVEL (3) \ 19 COND		12 AWG	1 CABLE	DIGITAL CONTROL SIGNALS OUT	
C550D	101	254	LEVEL (3) \ 19 COND		12 AWG	1 CABLE	DIGITAL CONTROL SIGNALS OUT	
C551A	101	254	LEVEL (3) \ 12 COND		12 AWG	1 CABLE	DIGITAL CONTROL SIGNALS OUT	
C551B	101	254	LEVEL (3) \ 12 COND		12 AWG	1 CABLE	DIGITAL CONTROL SIGNALS OUT	
C551C	101	254	LEVEL (3) \ 12 COND		12 AWG	1 CABLE	DIGITAL OUTPUTS TO CUSTOMER ALARM PANEL	
C553A	101	254	LEVEL (1) \ 18 COND		18 AWG	1 CABLE-9 TW SHLD PAIRS	ANALOGS IN/OUT	
C553B	101	254	LEVEL (1) \ 18 COND		18 AWG	1 CABLE-9 TW SHLD PAIRS	ANALOGS IN/OUT	
C554	101	254	LEVEL (3) \ 4 COND		12 AWG	1 CABLE	REMOTE EMERGENCY TRIP R5E	
C575	149	201	LEVEL (5) \ 3 COND			SIZED BY CUSTOMER	3 PH. SUPPLY 88CR-1	
C583	183	334	LEVEL (4) \ 6 COND			2 PER PH.	3PH. 800 AMP SUPPLY FEEDER MCC1-AC	
C584	183	334	LEVEL (4) \ 6 COND			2 PER PH.	3PH. 800 AMP SUPPLY FEEDER MCC2-AC	
C590	101	201	LEVEL (3) \ 6 COND		12 AWG	1 CABLE	CONTROL SIGNALS	
C591	108	183	LEVEL (3) \ 2 COND		10 AWG	1 CABLE	CURRENT TRANSFORMERS 51TN-2	

CUSTOMER SUPPLIED CABLES

cable number	from	to	level / #cond	diameter / bend rad	gauge	makeup	purpose	special notes
C593	108	183	LEVEL (3) \ 4 COND		10 AWG	1 CABLE	CURRENT TRANSFORMERS 50/51AT-2	
C596	201	334	LEVEL (3) \ 2 COND		10 AWG	1 CABLE	125VDC CONTROL POWER	
C598	201	329	LEVEL (5) \ 3 COND			SIZED BY CUSTOMER	MEDIUM VOLTAGE SUPPLY	
C607	101	225	LEVEL (1) \ 2 COND		18 AWG	1 CABLE-1 TW SHLD PAIR	96TD-1	
C607A	225	339	LEVEL (3) \ 3 COND		12 AWG	1 CABLE	120VAC SUPPLY 96TD-1	
C610A	102	254	LEVEL (3) \ 12 COND		12 AWG	1 CABLE	AUX 86G1 CONTACTS TO CUSTOMER	
C610B	108	254	LEVEL (3) \ 12 COND		12 AWG	1 CABLE	AUX 86G2 CONTACTS TO CUSTOMER	
C610C	108	254	LEVEL (3) \ 12 COND		12 AWG	1 CABLE	AUX 86RE CONTACTS TO CUSTOMER	
C610D	108	254	LEVEL (3) \ 12 COND		12 AWG	1 CABLE	AUX 86AT CONTACTS TO CUSTOMER	
C610E	108	254	LEVEL (3) \ 12 COND		12 AWG	1 CABLE	AUX 86BF CONTACTS TO CUSTOMER	
C610F	108	254	LEVEL (3) \ 12 COND		12 AWG	1 CABLE	AUX 86G-1 CONTACTS TO CUSTOMER	
C610FA	108	254	LEVEL (3) \ 12 COND		12 AWG	1 CABLE	AUX 86G-2 CONTACTS TO CUSTOMER	
C610FB	108	254	LEVEL (3) \ 12 COND		12 AWG	1 CABLE	AUX 86BF CONTACTS TO CUSTOMER	
C610FC	108	254	LEVEL (3) \ 12 COND		12 AWG	1 CABLE	AUX 86RE CONTACTS TO CUSTOMER	
C610H	102	254	LEVEL (3) \ 12 COND		12 AWG	1 CABLE	86T1 CONTACTS TO CUSTOMER	
C610HA	102	254	LEVEL (3) \ 12 COND		12 AWG	1 CABLE	AUX 86T-1 CONTACTS TO CUSTOMER	
C610J	108	254	LEVEL (3) \ 12 COND		12 AWG	1 CABLE	86AT CONTACTS TO CUSTOMER	
C610V	102	254	LEVEL (3) \ 12 COND		12 AWG	1 CABLE	CUSTOMER INTERLOCKS	
C610W	108	254	LEVEL (3) \ 12 COND		12 AWG	1 CABLE	CUSTOMER INTERLOCKS	
C611	102	254	LEVEL (3) \ 12 COND		12 AWG	1 CABLE	CUSTOMER TRIPS AND PERMISSIVES	
C611A	102	254	LEVEL (3) \ 6 COND		12 AWG	1 CABLE	CUSTOMER TRIPS	
C615D	101	156	LEVEL (1) \ 2 COND		18 AWG	1 CABLE-1 TW SHLD PAIR	96FM-1A	
C667-1	101	456	LEVEL (3) \ 12 COND		12 AWG	1 CABLE	CONTROL SIGNALS UNIT #1	11
C667-2	101	456	LEVEL (3) \ 12 COND		12 AWG	1 CABLE	CONTROL SIGNALS UNIT #1	
C667-3	101	456	LEVEL (3) \ 12 COND		12 AWG	1 CABLE	CONTROL SIGNALS UNIT #1	
C667-4	101	456	LEVEL (3) \ 12 COND		12 AWG	1 CABLE	CONTROL SIGNALS UNIT #1	
C669	183	252	LEVEL (4) \ 3 COND			SIZED BY CUSTOMER	3 PH. 480V SUPPLY WATER WASH SKID	11
C671	101	176	LEVEL (3) \ 3 COND		12 AWG	1 CABLE	63QV-1	
C672	176	334	LEVEL (4) \ 3 COND			SIZED BY CUSTOMER	3 PH. SUPPLY 88QV-1	

CUSTOMER SUPPLIED CABLES

cable number	from	to	level / #cond	diameter / bend rad	gauge	makeup	purpose	special notes
C672A	176	339	LEVEL (3) \ 2 COND		10 AWG	1 CABLE	MOTOR HEATER 23QV-2	
C678	101	257	LEVEL (1) \ 18 COND		18 AWG	1 CABLE-9 TW SHLD PAIRS	5 TWO WIRE TRANSDUCER PACKAGE	
C725	339	455	LEVEL (3) \ 3 COND		12 AWG	1 CABLE	CONTROL POWER SUPPLY	
C727	101	455	LEVEL (3) \ 6 COND		12 AWG	1 CABLE	63AD-4	
C743	102	201	LEVEL (3) \ 2 COND		10 AWG	1 CABLE	59CM RELAY	
C745A	146	329	LEVEL (5) \ 3 COND			SIZED BY CUSTOMER	13.8KV TO TRANSFORMER PRIMARY	
C745B	183	329	LEVEL (5) \ 3 COND			SIZED BY CUSTOMER	13.8KV TO TRANSFORMER PRIMARY	
C776	136	151	LEVEL (3) \ 5 COND		12 AWG	1 CABLE	CONTROL SIGNALS	
C777	136	151	LEVEL (3) \ 2 COND		12 AWG	1 CABLE	120VAC SUPPLY 34GF-1	
C809	334	441	LEVEL (4) \ 3 COND		10 AWG	1 CABLE	3 PH. SUPPLY 88VL-2	
C809A	339	441	LEVEL (3) \ 2 COND		10 AWG	1 CABLE	MOTOR HEATER 23VL-2	
C817	334	441	LEVEL (4) \ 3 COND		10 AWG	1 CABLE	3 PH. SUPPLY 88VL-1	
C817A	339	441	LEVEL (3) \ 2 COND		10 AWG	1 CABLE	MOTOR HEATER 23 VL-1	
C819	101	563	LEVEL (3) \ 19 COND		12 AWG	1 CABLE	71GS-1, -2A, -2B, -2C	
C849	201	339	LEVEL (3) \ 3 COND		10 AWG	1 CABLE	23LC HEATER	
C870	101	284	LEVEL (3) \ 12 COND		12 AWG	1 CABLE	CONTROL SIGNALS	
C871	284	339	LEVEL (3) \ 3 COND		12 AWG	1 CABLE	120VAC SUPPLY	
C872	284	339	LEVEL (3) \ 12 COND		12 AWG	1 CABLE	CONTROL SIGNALS	
C874	284	339	LEVEL (4) \ 3 COND		10 AWG	1 CABLE	3 PH SUPPLY 88RC-1	
S875	101	115	LEVEL(3) \ 19 COND		12AWG	1 CABLE	CONTROL SIGNALS	
S876	101	114	LEVEL (1) \ 18 COND		18 AWG	1 CABLE-9 TW SHLD PAIRS	CONTROL SIGNALS	
S877	101	174	LEVEL (1) \ 18 COND		18 AWG	1 CABLE-9 TW SHLD PAIRS	CONTROL SIGNALS	
S878	101	236	LEVEL (1) \ 12 COND		18 AWG	1 CABLE-6 TW SHLD PAIRS	CONTROL SIGNALS	
S879	101	173	LEVEL(3) \ 19 COND		12AWG	1 CABLE	CONTROL SIGNALS	
C880	101	942	LEVEL(3) \ 19 COND		12AWG	1 CABLE	CONTROL SIGNALS	
S881	101	429	LEVEL(3) \ 8 COND		12AWG	1 CABLE	CONTROL SIGNALS	
S882	101	231	LEVEL(3) \ 19 COND		12AWG	1 CABLE	CONTROL SIGNALS	
C883	101	942	LEVEL(3) \ 19 COND		12AWG	1 CABLE	CONTROL SIGNALS	
S884	429	392	LEVEL(4) \ 3COND		4 AWG	1 CABLE	3 PH. SUPPLY 88AB-1	

CUSTOMER SUPPLIED CABLES

cable number	from	to	level / #cond	diameter / bend rad	gauge	makeup	purpose	special notes
C885	183	175	LEVEL(4) \ 3COND			SIZED BY CUSTOMER	3 PH. SUPPLY 88WN-1	
S886	429	115	LEVEL(4) \ 2COND		10AWG	1 CABLE	3 PH. SUPPLY 23AB-1	
C887	942	941	LEVEL(4)\ 3COND			SIZED BY CUSTOMER	3 PH. SUPPLY P203A	
C888	942	941	LEVEL(4)\ 3COND			SIZED BY CUSTOMER	3 PH. SUPPLY P203B	
C889	942	940	LEVEL(4)\ 3COND			SIZED BY CUSTOMER	3 PH. SUPPLY P400A	
C890	942	940	LEVEL(4)\ 3COND			SIZED BY CUSTOMER	3 PH. SUPPLY P400B	
S891	101	430	LEVEL(3) \ 4 COND		12 AWG	1 CABLE	CONTROL SIGNALS	
S892	101	430	LEVEL (1) \ 2 COND		18 AWG	1 CABLE-1 TW SHLD PAIRS	CONTROL SIGNALS	
S893	101	427	LEVEL(3) \ 4 COND		12 AWG	1 CABLE	CONTROL SIGNALS	
S894	101	427	LEVEL (1) \ 2 COND		18 AWG	1 CABLE-1 TW SHLD PAIRS	CONTROL SIGNALS	

CUSTOMER SUPPLIED GROUND CABLES

cable number	to	from	level / #cond	diameter / bend rad	gauge	makeup	purpose	special notes
CG1007	254	901	LEVEL (4) \ 1 COND		1/0 AWG	BARE CONDUCTOR	GROUND GRID CABLE	
CG1008	333	901	LEVEL (4) \ 2 COND		4/0 AWG	BARE CONDUCTORS	GROUND GRID CABLE	
CG1031	230	901	LEVEL (4) \ 1 COND		1/0 AWG	BARE CONDUCTOR	GROUND GRID CABLE	
CG1032	231	901	LEVEL (4) \ 1 COND		1/0 AWG	BARE CONDUCTOR	GROUND GRID CABLE	
CG1033	233 3	901	LEVEL (4) \ 1 COND		1/0 AWG	BARE CONDUCTOR	GROUND GRID CABLE	
CG1034	234	901	LEVEL (4) \ 1 COND		1/0 AWG	BARE CONDUCTOR	GROUND GRID CABLE	
CG1038	381	901	LEVEL (4) \ 1 COND		1/0 AWG	BARE CONDUCTOR	GROUND GRID CABLE	
CG1051	280	901	LEVEL (4) \ 2 COND		4/0 AWG	BARE CONDUCTORS	GROUND GRID CABLE	
CG1059	335	901	LEVEL (4) \ 2 COND		4/0 AWG	BARE CONDUCTORS	GROUND GRID CABLE	
CG902	157	901	LEVEL (4) \ 2 COND		4/0 AWG	BARE CONDUCTORS	GROUND GRID CABLE	
CG906	182	901	LEVEL (4) \ 2 COND		4/0 AWG	BARE CONDUCTORS	GROUND GRID CABLE	
CG907	146	901	LEVEL (4) \ 2 COND		4/0 AWG	BARE CONDUCTORS	GROUND GRID CABLE	
CG910	161	901	LEVEL (4) \ 2 COND		4/0 AWG	BARE CONDUCTORS	GROUND GRID CABLE	
CG914	121	901	LEVEL (4) \ 2 COND		4/0 AWG	BARE CONDUCTORS	GROUND GRID CABLE	
CG915	119	901	LEVEL (4) \ 2 COND		4/0 AWG	BARE CONDUCTORS	GROUND GRID CABLE	
CG920	134	901	LEVEL (4) \ 2 COND		4/0 AWG	BARE CONDUCTORS	GROUND GRID CABLE	
CG926	171	901	LEVEL (4) \ 2 COND		4/0 AWG	BARE CONDUCTORS	GROUND GRID CABLE	
CG927	176	901	LEVEL (4) \ 2 COND		4/0 AWG	BARE CONDUCTORS	GROUND GRID CABLE	
CG928	252	901	LEVEL (4) \ 2 COND		4/0 AWG	BARE CONDUCTORS	GROUND GRID CABLE	11
CG929	172	901	LEVEL (4) \ 2 COND		4/0 AWG	BARE CONDUCTORS	GROUND GRID CABLE	
CG931	183	901	LEVEL (4) \ 2 COND		4/0 AWG	BARE CONDUCTORS	GROUND GRID CABLE	
CG933	201	901	LEVEL (4) \ 2 COND		4/0 AWG	BARE CONDUCTORS	GROUND GRID CABLE	
CG954	158	901	LEVEL (4) \ 2 COND		4/0 AWG	BARE CONDUCTORS	GROUND GRID CABLE	
CG964	128	901	LEVEL (4) \ 2 COND		4/0 AWG	BARE CONDUCTORS	GROUND GRID CABLE	
CG965	129	901	LEVEL (4) \ 2 COND		4/0 AWG	BARE CONDUCTORS	GROUND GRID CABLE	
CG983	283	901	LEVEL (4) \ 2 COND		4/0 AWG	BARE CONDUCTORS	GROUND GRID CABLE	

001 WELDING RECEPTACLE ONE

cable	to	lev	#cnd	gauge
C408	334 PEECC MOTOR CONTROL CENTER	4	3	

101 TURBINE CONTROL PANEL

cable	to	lev	#cnd	gauge
C1001	136 JB005B GENERATOR COMPARTMENT LEVEL 3	3	19	12 AWG
C006	363 JB130 GAS FUEL MODULE	1	36	18 AWG
C014	363 JB130 GAS FUEL MODULE	3	37	12 AWG
C017	135 JB005A GENERATOR COPARTMENT LOW FUEL LEVEL	1	36	18 AWG
C018	135 JB005A GENERATOR COPARTMENT LOW FUEL LEVEL	1S	18	18 AWG
C037	115 JB002 ACCESSORY BASSE LEVEL 3	3	37	12 AWG
C038	234 JB020B TURBINE OFF BASE RACK LOW LEVEL	1	36	18 AWG
C039	233 JB020A TURBINE OFF BASE RACK LOW LEVEL	1S	18	18 AWG
C041	233 JB020A TURBINE OFF BASE RACK LOW LEVEL	1S	18	18 AWG
C042	230 JB019A TURBINE OFF BASE RACK LEVEL 3	3	19	12 AWG
C073	387 JB020G TURBINE COMPARTMENT LOW LEVEL	1S	36	18 AWG
C074	387 JB020G TURBINE COMPARTMENT LOW LEVEL	1S	36	18 AWG
C076	135 JB005A GENERATOR COMPARTMENT LOW LEVEL	1	18	18 AWG
C096	363 JB130 GAS FUEL MODULE	1	36	18 AWG
C128	231 JB019B TURBINE OFF BASE RACK LEVEL 3	3	6	12 AWG
C182	231 JB019B TURBINE OFF BASE RACK LEVEL 3	3	12	12 AWG
C191	128 EXHAUST FRAME BLOWER 88TK-1	3	3	12 AWG
C193	128 EXHAUST FRAME BLOWER 88TK-2	3	3	12 AWG
C200	233 JB020A TURBINE OFF BASE RACK LOW LEVEL	1S	36	18 AWG
C201	390 JB034 TURBINE ROOF LOW LEVEL	1	8	18 AWG
C256	230 JB019A TURBINE OFF BASE RACK LEVEL 3	3	3	10 AWG
C257	231 JB019B TURBINE OFF BASE RACK LEVEL 3	3	12	12 AWG
C285	363 JB130 GAS FUEL MODULE	1S	6	18 AWG
C414A	622 FUEL GAS HEATER CONTROL PANEL	3	7	12 AWG
C428	146 METALCLAD SWITCHGEAR	3	6	12 AWG
C473	387 JB020G TURBINE COMPARTMENT LOW LEVEL	1	2	18 AWG
C474	387 JB020G TURBINE COMPARTMENT LOW LEVEL	1	2	18 AWG
C512	449 JB078 TURB. AIR INLET FILTER COMPARTMENT	3	7	12 AWG
C513A	157 TURBINE AIR INLET FILTER COMPARTMENT	1S	2	18 AWG
C513B	157 TURBINE AIR INLET FILTER COMPARTMENT	1S	2	18 AWG
C513C	157 TURBINE AIR INLET FILTER COMPARTMENT	1S	2	18 AWG
C516A	447 INLET HEATING CONTROL VALVE	3	2	12 AWG
C516E	611 INLET HEATING ISOLATION VALVE	3	2	12 AWG
C517A	447 INLET HEATING CONTROL VALVE	1	2	18 AWG
C517B	447 INLET HEATING CONTROL VALVE	1	2	18 AWG
C517D	447 INLET HEATING CONTROL VALVE	1	2	18 AWG
C517E	447 INLET HEATING CONTROL VALVE	1	2	18 AWG
C531	428 JB090 COOLING WATER MODULE LEVEL 3	3	6	12 AWG
C550A	254 CUSTOMER DEVICES--PANELS	3	19	12 AWG
C550B	254 CUSTOMER DEVICES--PANELS	3	19	12 AWG
C550C	254 CUSTOMER DEVICES--PANELS	3	19	12 AWG
C550D	254 CUSTOMER DEVICES--PANELS	3	19	12 AWG
C551A	254 CUSTOMER DEVICES--PANELS	3	12	12 AWG
C551B	254 CUSTOMER DEVICES--PANELS	3	12	12 AWG
C551C	254 CUSTOMER DEVICES--PANELS	3	12	12 AWG
C553A	254 CUSTOMER DEVICES--PANELS	1	18	18 AWG
C553B	254 CUSTOMER DEVICES--PANELS	1	18	18 AWG
C554	254 CUSTOMER DEVICES--PANELS	3	4	12 AWG

101 TURBINE CONTROL PANEL

cable	to	lev	#cnd	gauge
C590	201 LIMIT AMP	3	6	12 AWG
C607	225 RELATIVE HUMIDITY SENSOR	1	2	18 AWG
C615D	156 FUEL GAS FLOW DEVICES	1	2	18 AWG
C667-1	456 JB010 WATER WASH SKID LEVEL 3	3	12	12 AWG
C667-2	456 JB010 WATER WASH SKID LEVEL 3	3	12	12 AWG
C667-3	456 JB010 WATER WASH SKID LEVEL 3	3	12	12 AWG
C667-4	456 JB010 WATER WASH SKID LEVEL 3	3	12	12 AWG
C671	176 LUBE OIL DEMISTER (TURBINE)	3	3	12 AWG
C678	257 JB037 PERFORMANCE MONITORING LOW LEVEL	1	18	18 AWG
C727	455 JB297 AIR PROCESS SKID LEVEL 3	3	6	12 AWG
C819	563 JB386 GAS SCRUBBER LEVEL 3	3	19	12 AWG
C870	284 FIRE PROTECTION PANEL	3	12	12 AWG
S875	115 JB002 ACCESSORY BASE LEVEL 3	3	19	12 AWG
S876	114 JB001 ACCESSORY BASE LOW LEVEL	1	18	18 AWG
S877	174 JB79 WATER INJECTION SKID LEVEL 1	1	18	18 AWG
S878	236 TURBINE ROOF LOW LEVEL	1	12	18 AWG
S879	173 JB72 WATER INJECTION SKID LEVEL 3	3	19	12 AWG
C880	942 CUSTOMER SUPPLIED MCC	3	19	12 AWG
S881	429 88AB-1 MCC CUBICLE	3	8	12 AWG
S882	231 JB019B TURBINE OFF BASE LEVEL-3	3	19	12 AWG
C883	942 CUSTOMER SUPPLIED MCC	3	19	12 AWG
S891	430 DEMIN WATER FORWARDING JB01	3	4	12 AWG
S892	430 DEMIN WATER FORWARDING JB01	1	2	18 AWG
S893	427 LIQUID FUEL FORWARDING JB01	3	4	12 AWG
S894	427 LIQUID FUEL FORWARDING JB01	1	2	18 AWG

102 GENERATOR CONTROL PANEL

cable	to	lev	#cnd	Gauge
C049	146 METALCLAD WITCHGEAR	3	37	12 AWG
C083	146 METALCLAD WITCHGEAR	3	12	10 AWG
C235A	146 METALCLAD WITCHGEAR	3	12	10 AWG
C235B	146 METALCLAD WITCHGEAR	3	12	10 AWG
C236A	581 JB005N GEN. NUETRAL ACCESSORIES COMP. LEVEL 3	3	12	10 AWG
C236B	581 JB005N GEN. NUETRAL ACCESSORIES COMP. LEVEL 3	3	12	10 AWG
C236C	146 METALCLAD WITCHGEAR	3	12	10 AWG
C417A	102 GENERATOR CONTROL PANEL	3	12	10 AWG
C418A	102 GENERATOR CONTROL PANEL	3	12	10 AWG
C420A	254 CUSTOMER DEVICES--PANELS	3	4	10 AWG
C420B	254 CUSTOMER DEVICES--PANELS	3	4	10 AWG
C549	254 CUSTOMER DEVICES--PANELS	1	18	18 AWG
C610A	254 CUSTOMER DEVICES--PANELS	3	12	12 AWG
C610H	254 CUSTOMER DEVICES--PANELS	3	12	12 AWG
C610HA	254 CUSTOMER DEVICES--PANELS	3	12	12 AWG
C610V	254 CUSTOMER DEVICES--PANELS	3	12	12 AWG
C611	254 CUSTOMER DEVICES--PANELS	3	12	12 AWG
C611A	254 CUSTOMER DEVICES--PANELS	3	6	12 AWG
C743	201 LIMIT AMP	3	2	10 AWG

108 AUXILARY REPLAY PANEL

cable	to	lev	#cnd	Gauge
C235C	146 METAL CLAD SWITCHGEAR	3	12	10 AWG
C421	108 AUXILIARY PANEL	3	12	12 AWG
C421A	108 AUXILIARY PANEL	3	12	12 AWG
C421B	108 AUXILIARY PANEL	3	12	12 AWG
C421C	108 AUXILIARY PANEL	3	12	12 AWG
C422	108 AUXILIARY PANEL	3	6	12 AWG
C422A	108 AUXILIARY PANEL	3	6	12 AWG
C426	254 CUSTOMER DEVICES--PANELS	1	12	18 AWG
C426A	254 CUSTOMER DEVICES--PANELS	1	3	18 AWG
C549A	254 CUSTOMER DEVICES--PANELS	1	18	18 AWG
C591	183 AUXILIARY POWER TRANSFORMER	3	2	10 AWG
C593	183 AUXILIARY POWER TRANSFORMER	3	4	10 AWG
C610B	254 CUSTOMER DEVICES--PANELS	3	12	12 AWG
C610C	254 CUSTOMER DEVICES--PANELS	3	12	12 AWG
C610D	254 CUSTOMER DEVICES--PANELS	3	12	12 AWG
C610E	254 CUSTOMER DEVICES--PANELS	3	12	12 AWG
C610F	254 CUSTOMER DEVICES--PANELS	3	12	12 AWG
C610FA	254 CUSTOMER DEVICES--PANELS	3	12	12 AWG
C610FB	254 CUSTOMER DEVICES--PANELS	3	12	12 AWG
C610FC	254 CUSTOMER DEVICES--PANELS	3	12	12 AWG
C610J	254 CUSTOMER DEVICES--PANELS	3	12	12 AWG
C610W	254 CUSTOMER DEVICES--PANELS	3	12	12 AWG

114 JB001 ACCESSORY BASE LOW LEVEL

cable	to	lev	#cnd	Gauge
C172	201 LIMIT AMP	1	18	18 AWG
S876	101 TURBINE CONTROL PANEL	1	18	18 AWG

115 JB001 ACCESSORY BASE LEVEL 3

cable	to	lev	#cnd	Gauge
C037	101 TURBINE CONTROL PANEL	3	37	12 AWG
C161	339 JB298 PEECC LEVEL 3	3	12	10 AWG
C270	339 JB298 PEECC LEVEL 3	3	12	12 AWG
S875	101 TURBINE CONTROL PANEL	3	19	12 AWG
S886	429 88AB-1 MCC CUBICLE	3	2	10 AWG

118 ACCESSORY BASE MOTORS

cable	to	lev	#cnd	Gauge
C027	334 PEECC MOTOR CONTROL CENTER	4	3	2 AWG

119 ACCESSORY BASE

cable	to	lev	#cnd	Gauge

CG915	901 CUSTOMER GROUND GRID	4	2	4/0 AWG

121 TURBINE BASE

cable	to	lev	#cnd	Gauge
CG914	901 CUSTOMER GROUND GRID	4	2	4/0 AWG

122 TURBINE ROOF MOUNTED DEVICES

cable	to	lev	#cnd	Gauge
C199	334 PEECC MOTOR CONTROL CENTER	4	3	8 AWG
C199A	339 JB298 PEECC LEVEL 3	3	2	10 AWG

125 JB055 TURBINE BASE LOW LEVEL

cable	to	lev	#cnd	Gauge
C117A	208 VIBRATION MONITOR PANEL	1	18	18 AWG

126 JB056 TURBINE BASE LOW LEVEL

cable	to	lev	#cnd	Gauge
C117B	208 VIBRATION MONITOR PANEL	1	18	18 AWG

127 JB085 LOAD GEAR COMPARTMENT LOW LEVEL

cable	to	lev	#cnd	Gauge
C117C	208 VIBRATION MONITOR PANEL	1	9	18 AWG

128 EXHAUST FRAME BLOWER 88TK-1

cable	To	lev	#cnd	Gauge
C071	334 PEECC MOTOR CONTROL CENTER	4	3	
C190	339 JB298 PEECC LEVEL 3	3	2	10 AWG
C191	101 TURBINE CONTROL PANEL	3	3	12 AWG
CG964	901 CUSTOMER GROUND GRID	4	2	4/0 AWG

129 EXHAUST FRAME BLOWER 88TK-2

cable	To	lev	#cnd	Gauge
C072	334 PEECC MOTOR CONTROL CENTER	4	3	
C192	339 JB298 PEECC LEVEL 3	3	2	10 AWG
C193	101 TURBINE CONTROL PANEL	3	3	12 AWG
CG965	901 CUSTOMER GROUND GRID	4	2	4/0 AWG

133 JB005C GENERATOR COMPARTMENT LEVEL 4

cable	To	lev	#cnd	Gauge

C059	334 PEECC MOTOR CONTROL CENTER	4	3	10 AWG

134 GENERATOR COMPARTMENT

cable	To	lev	#cnd	Gauge
CG920	901 CUSTOMER GROUND GRID	4	2	4/0 AWG

135 JB005A GENERATOR COMPARTMENT LOW LEVEL

cable	To	lev	#cnd	Gauge
C017	101 TURBINE CONTROL PANEL	1	36	18 AWG
C018	101 TURBINE CONTROL PANEL	1S	18	18 AWG
C076	101 TURBINE CONTROL PANEL	1	18	18 AWG
C094B	562 STATIC VOLTAGE REGULATOR—EX2000R	1	8	18 AWG

136 JB005B GENERATOR COMPARTMENT LEVEL 3

cable	To	lev	#cnd	Gauge
C001	101 TURBINE CONTROL PANEL	3	19	12 AWG
C123	562 STATIC VOLTAGE REGULATOR--EX2000R	3	6	10 AWG
C219	339 JB298 PEECC LEVEL 3	3	12	12 AWG
C776	151 JB215 GENERATOR FILTER SEQUENCER	3	5	12 AWG
C777	151 JB215 GENERATOR FILTER SEQUENCER	3	2	12 AWG

146 METALCLAD SWITCHGEAR

cable	To	lev	#cnd	Gauge
C049	102 GENERATOR CONTROL PANEL	3	37	12 AWG
C077	334 PEECC MOTOR CONTROL CENTER	4	3	8 AWG
C080	335 BUS DUCT	3	3	12 AWG
C083	102 GENERATOR CONTROL PANEL	3	12	10 AWG
C148	562 STATIC VOLTAGE REGULATOR--EX2000R	3	4	10 AWG
C235A	102 GENERATOR CONTROL PANEL	3	12	10 AWG
C235B	102 GENERATOR CONTROL PANEL	3	12	10 AWG
C235C	108 AUXILIARY RELAY PANEL	3	12	10 AWG
C36C	102 GENERATOR CONTROL PANEL	3	12	10 AWG
C237	334 PEECC MOTOR CONTROL CENTER	4	2	6 AWG
C428	101 TURBINE CONTROL PANEL	3	6	12 AWG
C745A	329 CRANKING MOTOR TRANSFORMER	5	3	
CG907	901 CUSTOMER GROUND GRID	4	2	4/0 AWG

149 CRANKING MOTOR

cable	To	lev	#cnd	Gauge
C575	201 LIMIT LAMP	5	3	

151 JB215 GENERATOR FILTER SEQUENCER

cable	To	lev	#cnd	Gauge
C776	136 JB005B GENERATOR COMPARTMENT LEVEL 3	3	5	12 AWG

C777	136 JB005B GENERATOR COMPARTMENT LEVEL 3	3	2	12 AWG

156 FUEL GAS FLOW DEVICES

cable	To	lev	#cnd	Gauge
C615D	101 TURBINE CONTROL PANEL	1	2	18 AWG

157 TURBINE AIR INLET FILTER COMPARTMENT

cable	To	lev	#cnd	Gauge
C513A	101 TURBINE CONTROL PANEL	1S	2	18 AWG
C513B	101 TURBINE CONTROL PANEL	1S	2	18 AWG
C513C	101 TURBINE CONTROL PANEL	1S	2	18 AWG
CG902	901 CUSTOMER GROUND GRID	4	2	4/0 AWG

158 JB005B GAS SCRUBBER

cable	To	lev	#cnd	Gauge
CG954	901 CUSTOMER GROUND PANEL	4	2	4/0 AWG

161 COOLING WATER MODULE #1

cable	To	lev	#cnd	Gauge
CG910	901 CUSTOMER GOUND GRID	4	2	4/0 AWG

171 GAS FUEL (VALVE) MODULE

cable	To	lev	#cnd	Gauge
CG926	901 CUSTOMER GROUND GRID	4	2	4/0 AWG

172 AIR PROCESS SKID

cable	To	lev	#cnd	Gauge
CG929	901 CUSTOMER GROUND GRID	4	2	4/0 AWG

173 JB72 WATER INJECTION SKID LEVEL 3

cable	To	lev	#cnd	Gauge
S879	101 TURBINE CONTROL PANEL	3	19	12 AWG

174 JB79 WATER INJECTION SKID LEVEL 1

cable	To	lev	#cnd	Gauge
S877	101 TURBINE CONTROL PANEL	1	18	18 AWG

175 WATER INJECTION SKID 480 VOLT SUPPLY

cable	To	lev	#cnd	Gauge
C885	183 AUXILIARY POWER TRANSFORMER	1	3	CUST

176 LUBE OIL DEMISTER (TURBINE)

cable	To	lev	#cnd	Gauge
C671	101 TURBINE CONTROL PANEL	3	3	12 AWG
C672	334 PEECC MOTOR CONTROL CENTER	4	3	
C672A	339 JB298 PEECC LEVEL 3	3	2	10 AWG
CG927	901 CUSTOMER GROUND GRID	4	2	4/0 AWG

182 MAIN TRANSFORMER (STEP UP)

cable	To	lev	#cnd	Gauge
C406	334 PEECC MOTOR CONTROL CENTER	4	3	
C407	334 PEECC MOTOR CONTROL CENTER	4	3	
C409A	334 PEECC MOTOR CONTROL CENTER	3	2	10 AWG
C409B	334 PEECC MOTOR CONTROL CENTER	3	2	10 AWG
CG906	901 CUSTOMER GROUND GRID	4	2	4/0 AWG

183 AUXILARY POWER TRANSFORMER

cable	To	lev	#cnd	Gauge
C401	254 CUSTOMER DEVICES--PANELS	4	3	
C411	622 FUEL GAS HEATER CONTROL PANEL	4	3	
C415	338 CUSTOMER 480V SUPPLY	4	3	
C583	334 PEECC MOTOR CONTROL CENTER	4	6	
C584	334 PEECC MOTOR CONTROL CENTER	4	6	
C591	108 AUXILIARY RELAY PANEL	3	2	10 AWG
C593	108 AUXILIARY RELAY PANEL	3	4	10 AWG
C669	252 WATER WASH SKID	4	3	
C745B	329 CRANKING MOTOR TRANSFORMER	5	3	
CG931	901 CUSTOMER GROUND GRID	4	2	4/0 AWG
C885	175 WATER INJECTION SKID 480 VOLT SUPPLY	4	3	CUST

201 LIMIT AMP

cable	To	lev	#cnd	Gauge
C172	114 JB001 ACCESSORY BASE LOW LEVEL	1	18	18 AWG
C575	149 CRANKING MOTOR	5	3	
C590	101 TURBINE CONTROL PANEL	3	6	12 AWG
C596	334 PEECC MOTOR CONTROL CENTER	3	2	10 AWG
C598	329 CRANKING MOTOR TRANSFORMER	5	3	
C743	102 GENERATOR CONTROL PANEL	3	2	10 AWG
C849	339 JB298 PEECC LEVEL 3	3	3	10 AWG
CG933	901 CUSTOMER GROUND GRID	4	2	4/0 AWG

208 VIBRATION MONITOR PANEL

cable	To	lev	#cnd	Gauge
C117A	125 JB055 TURBINE BASE LOW LEVEL	1	18	18 AWG
C117B	126 JB056 TURBINE BASE LOW LEVEL	1	18	18 AWG

C117A	127 JB085 LOAD GEAR COMPARTMENT LOW LEVEL	1	9	18 AWG
C145	325 JB163 GENERATOR COMPARTMENT LOW LEVEL	1	8	18 AWG

225 RELATIVE HUMIDITY SENSOR

cable	To	lev	#cnd	Gauge
C607	101 TURBINE CONTROL PANEL	1	2	18 AWG
C607A	339 JB298 PEEC LEVEL 3	3	3	12 AWG

227 HAZARDOUS GAS MONITOR

cable	To	lev	#cnd	Gauge
C022	363 JB130 GAS FUEL MODULE	2	9	18 AWG
C171	234 JB020B TURBINE OFF BASE RACK LOW LEVEL	2	9	18 AWG

230 JB019A TURBINE OFF BASE RACK LEVEL 3

cable	To	lev	#cnd	Gauge
C042	101 TURBINE CONTROL PANEL	3	19	12 AWG
C256	101 TURBINE CONTROL PANEL	3	3	10 AWG
CG1031	901 CUSTOMER GROUND GRID	4	1	1/0 AWG

231 JB019B TURBINE OFF BASE RACK LEVEL 3

cable	To	lev	#cnd	Gauge
C128	101 TURBINE CONTROL PANEL	3	6	12 AWG
C182	101 TURBINE CONTROL PANEL	3	12	12 AWG
C257	101 TURBINE CONTROL PANEL	3	12	12 AWG
CG1032	901 CUSTOMER GROUND GRID	4	1	1/0 AWG
S882	101 TURBINE CONTROL PANEL	3	19	12 AWG

233 JB020A TURBINE OFF BASE RACK LOW LEVEL

cable	To	lev	#cnd	Gauge
C039	101 TURBINE CONTROL PANEL	1S	18	18 AWG
C041	101 TURBINE CONTROL PANEL	1S	18	18 AWG
C200	101 TURBINE CONTROL PANEL	1S	36	18 AWG
CG1033	901 CUSTOMER GROUND GRID	4	1	1\/ AWG

234 JB020B TURBINE OFF BASE RACK LOW LEVEL

cable	To	lev	#cnd	Gauge
C009A	751 FLAME DETECTOR INTERFACE MODULE PRIMARY	3S	8	18 AWG
C009B	752 FLAME DETECTOR INTERFACE MODULE SECONDARY	3S	8	18 AWG
C038	101 TURINE CONTROL PANEL	1	36	18 AWG
C171	227 HAZARDOUS GAS MONITOR	2	9	18 AWG
CG1034	901 CUSTOMER GRUOND GRID	4	1	1/0 AWG

236 TURBINE ROOF LOW LEVEL

cable	To	lev	#cnd	Gauge
S878	101 TURBINE CONTROL PANEL	1	12	18 AWG

252 WATER WASH SKID

cable	To	lev	#cnd	Gauge
C669	183 AUXILIARY POWER TRANSFORMER	4	3	
CG928	901 CUSTOMER GRUOND GRID	4	2	4/0 AWG

254 CUSTOMER DEVICES - PANELS

cable	To	lev	#cnd	Gauge
C401	183 AUXILIARY POWER TRANSFORMER	4	3	
C410A	334 PEECC MOTOR CONTROL CENTER	3	2	10 AWG
C410B	334 PEECC MOTOR CONTROL CENTER	3	2	10 AWG
C420A	102 GENERATOR CONTROL PANEL	3	4	10 AWG
C420B	102 GENERATOR CONTROL PANEL	3	4	10 AWG
C426	108 AUXILIARY RELAY PANEL	1	12	18 AWG
C426A	108 AUXILIARY RELAY PANEL	1	3	18 AWG
C549	102 GENERATOR CONTROL PANEL	1	18	18 AWG
C549A	108 AUXILIARY RELAY PANEL	1	18	18 AWG
C550A	101 TURBINE CONTROL PANEL	3	19	12 AWG
C550B	101 TURBINE CONTROL PANEL	3	19	12 AWG
C550C	101 TURBINE CONTROL PANEL	3	19	12 AWG
C550D	101 TURBINE CONTROL PANEL	3	19	12 AWG
C551A	101 TURBINE CONTROL PANEL	3	12	12 AWG
C550B	101 TURBINE CONTROL PANEL	3	12	12 AWG
C551C	101 TURBINE CONTROL PANEL	3	12	12 AWG
C553A	101 TURBINE CONTROL PANEL	1	18	18 AWG
C553B	101 TURBINE CONTROL PANEL	1	18	18 AWG
C554	101 TURBINE CONTROL PANEL	3	4	12 AWG
C610A	102 GENERATOR CONTROL PANEL	3	12	12 AWG
C610B	108 AUXILIARY RELAY PANEL	3	12	12 AWG
C610C	108 AUXILIARY RELAY PANEL	3	12	12 AWG
C610D	108 AUXILIARY RELAY PANEL	3	12	12 AWG
C610E	108 AUXILIARY RELAY PANEL	3	12	12 AWG
C610F	108 AUXILIARY RELAY PANEL	3	12	12 AWG
C610FA	108 AUXILIARY RELAY PANEL	3	12	12 AWG
C610FB	108 AUXILIARY RELAY PANEL	3	12	12 AWG
C610FC	108 AUXILIARY RELAY PANEL	3	12	12 AWG
C610H	102 GENERATOR CONTROL PANEL	3	12	12 AWG
C610HA	102 GENERATOR CONTROL PANEL	3	12	12 AWG
C610J	108 AUXILIARY RELAY PANEL	3	12	12 AWG
C610V	102 GENERATOR CONTROL PANEL	3	12	12 AWG
C610W	108 AUXILIARY RELAY PANEL	3	12	12 AWG
C611	102 GENERATOR CONTROL PANEL	3	12	12 AWG
C611A	102 GENERATOR CONTROL PANEL	3	6	12 AWG
CG1007	901 CUSTOMER GROUND GRID	4	1	1/0 AWG

257 JB037 PERFORMANCE MONITORING LOW LEVEL

cable	To	lev	#cnd	Gauge
C678	101 TURBINE CONTROL PANEL	1	18	18 AWG

280 GENERATOR NEUTRAL ACCESSORY COMPARTMENT GNAC

cable	To	lev	#cnd	Gauge
CG1051	901 CUSTOMER GROUND GRID	4	2	4/0 AWG

283 FIRE PROTECTION DEVICES

cable	To	lev	#cnd	Gauge
CG983	901 CUSTOMER GROUND GRID	4	2	4/0 AWG

284 FIRE PROTECTION PANEL

cable	To	lev	#cnd	Gauge
C135	384 JB077A ACCESSORY BASE FP	2S	18	18 AWG
C136	384 JB077A ACCESSORY BASE FP	2S	18	18 AWG
C870	101 TURBINE CONTROL PANEL	3	12	12 AWG
C871	339 JB298 PEECC LEVEL 3	3	3	12 AWG
C872	339 JB298 PEECC LEVEL 3	3	12	12 AWG
C874	339 JB298 PEECC LEVEL 3	4	3	10 AWG

325 JB163 GENERATOR COMPARTMENT LOW LEVEL

cable	To	lev	#cnd	Gauge
C145	208 VIBRATION MONITOR PANEL	1	18	18 AWG

329 CRANKING MOTOR TRANSFORMER

cable	To	lev	#cnd	Gauge
C598	LIMIT AMP	5	3	
C745A	METALCLAD SWITCHGEAR	5	3	
C745B	AUXILIARY POWER TRANSFORMER	3	3	

333 PACKAGED ELECTRICAL-ELECTRONIC CONTROL CENTER-PEECC

cable	To	lev	#cnd	Gauge
CG1008	901 CUSTOMER GROUND GRID	4	2	4/0 AWG

334 PEECC MOTOR CONTROL CENTER

cable	To	lev	#cnd	Gauge
C012	392 J004 ACCESSORY BASE LEVEL 4	4	3	4 AWG
C013C	392 J004 ACCESSORY BASE LEVEL 4	4	3	10 AWG
C027	118 ACCESSORY BASE MOTORS	4	3	2 AWG
C028	392 J004 ACCESSORY BASE LEVEL 4	4	3	8 AWG
C055A	381 JB021A TURBINE OFF CASE RACK LEVEL 4	4	3	8 AWG
C055B	381 JB021A TURBINE OFF CASE RACK LEVEL 4	4	3	8 AWG
C059	133 JB005C GENERATOR COMPARTMENT LEVEL 4	4	3	10 AWG
C071	128 EXHAUST FRAME BLOWER 88TK-1	4	3	
C072	129 EXHAUST FRAME BLOWER 88TK-2	4	3	
C077	146 METALCLAD SWITCHGEAR	4	3	8 AWG
C102	392 J004 ACCESSORY BASE LEVEL 4	4	3	8 AWG
C125	392 J004 ACCESSORY BASE LEVEL 4	4	5	10 AWG
C149	441 JB131 GAS FUEL MODULE LEVEL 4	4	3	8 AWG
C199	122 TURBINE ROOF MOUNTED DEVICES	4	3	8 AWG
C237	146 METALCLAD SWITCHGEAR	4	2	6 AWG
C251	392 J004 ACCESSORY BASE LEVEL 4	4	3	6 AWG
C402	939 UNIT AREA OUTDOOR LIGHTING	4	3	
C403	742 SITE LIGHTS	4	3	
C404	938 CEMS SYSTEM	4	3	
C406	182 MAIN TRANSFORMER (STEP UP)	4	3	
C407	182 MAIN TRANSFORMER (STEP UP)	4	3	
C408	001 WELDING RECEPTACLE ONE	4	3	
C409A	182 MAIN TRANSFORMER (STEP UP)	3	2	10 AWG
C409B	182 MAIN TRANSFORMER (STEP UP)	3	2	10 AWG
C410A	254 CUSTOMER DECIVES--PANELS	3	2	10 AWG
C410B	254 CUSTOMER DECIVES--PANELS	3	2	10 AWG
C480	514 CUSTOMER SWITCHGEAR	3	3	12 AWG
C481	514 CUSTOMER SWITCHGEAR	3	2	10 AWG
C533	438 JB090A COOLING WATER MODULE LEVEL 4	4	3	
C534	438 JB090A COOLING WATER MODULE LEVEL 4	4	3	
C535	438 JB090A COOLING WATER MODULE LEVEL 4	4	3	
C537	438 JB090A COOLING WATER MODULE LEVEL 4	4	3	
C538	438 JB090A COOLING WATER MODULE LEVEL 4	4	3	
C583	183 AUXILIARY POWER TRANSFORMER	4	6	
C584	183 AUXILIARY POWER TRANSFORMER	4	6	
C596	201 LIMIT AMP	3	2	10 AWG
C672	176 LUBE OIL DEMISTER (TURBINE)	4	3	
C809	441 JB131 GAS FUEL MODULE LEVEL 4	4	3	10 AWG
C817	441 JB131 GAS FUEL MODULE LEVEL 4	4	3	10 AWG

335 BUS DUCT

cable	To	lev	#cnd	Gauge
C080	146 METALCLAD SWITCHGEAR	3	3	12 AWG
CG1059	901 CUSTOMER GROUND GRID	4	2	4/0 AWG

338 CUSTOMER 480V SUPPLY

cable	To	lev	#cnd	Gauge
C415	183 AUXILIARY POWER TRANSFORMER	4	3	

339 JB298 PEECC LEVEL 3

cable	To	lev	#cnd	Gauge
C161	115 JB002 ACCESSORY BASE LEVEL 3	3	12	10 AWG
C190	128 EXHAUST FRAME BLOWER 88TK-1	3	2	10 AWG
C192	129 EXHAUST FRAME BLOWER 88TK-2	3	2	10 AWG
C199A	122 TURBINE ROOF MOUNTED DEVICES	3	2	10 AWG
C216	363 JB130 GAS FUEL MODULE	3	3	12 AWG
C217	363 JB130 GAS FUEL MODULE	3	2	10 AWG
C219	136 JB005B GENERATOR COMPARTMENT LEVEL 3	3	12	12 AWG
C249	581 JB005N GEN. NEUTRAL ACCESSORIES COMP. LEVEL 3	3	3	10 AWG
C270	115 JB002 ACCESSORY BASE LEVEL 3	3	12	12 AWG
C515	449 JB078 TURB. AIR INLET FILTER CMOPARTMENT	3	3	6 AWG
C532	428 JB090 COOLING WATER MODULE LEVEL 3	3	12	12 AWG
C544	428 JB090 COOLING WATER MODULE LEVEL 3	3	12	10 AWG
C607A	225 RELATIVE HUMIDITY SENSOR	3	3	12 AWG
C672A	176 LUBE OIL DEMISTER (TURBINE)	3	2	10 AWG
C725	455 JB297 AIR PROCESS SKID LEVEL 3	3	3	12 AWG
C809A	441 JB131 GAS FUEL MODULE LEVEL 4	3	2	10 AWG
C817A	441 JB131 GAS FUEL MODULE LEVEL 4	3	2	10 AWG
C849	201 LIMIT AMP	3	3	10 AWG
C871	284 FIRE PROTECTION PANEL	3	3	12 AWG
C872	284 FIRE PROTECTION PANEL	3	12	12 AWG
C874	284 FIRE PROTECTION PANEL	4	3	10 AWG

348 JB077A ACCESSORY BASE FP

cable	To	lev	#cnd	Gauge
C135	284 FIRE PROTECTION PANEL	2S	18	18 AWG
C136	284 FIRE PROTECTION PANEL	2S	18	18 AWG

363 JB130 GAS FUEL MODULE

cable	To	lev	#cnd	Gauge
C006	101 TURBINE CONTROL PANEL	1	36	18 AWG
C014	101 TURBINE CONTROL PANEL	3	37	12 AWG
C022	227 HAZARDOUS GAS MONITOR	2	9	18 AWG
C096	101 TURBINE CONTROL PANEL	1	36	18 AWG
C216	339 JB298 PEECC LEVEL 3	3	3	12 AWG
C217	339 JB298 PEECC LEVEL 3	3	2	10 AWG
C285	101 TURBINE CONTROL PANEL	1S	6	18 AWG

381 JB021A TURBINE OFF BASE RACK LEVEL 4

cable	To	lev	#cnd	Gauge
C055A	334 PEECC MOTOR CONTROL CENTER	4	3	8 AWG
C055B	334 PEECC MOTOR CONTROL CENTER	4	3	8 AWG
CG1038	901 CUSTOMER GROUND GRID	4	1	1/0 AWG

387 JB020G TURBINE COMPARTMENT LOW LEVEL

cable	To	lev	#cnd	Gauge
C073	101 TURBINE CONTROL PANEL	1S	36	18 AWG
C074	101 TURBINE CONTROL PANEL	1S	36	18 AWG
C473	101 TURBINE CONTROL PANEL	1	2	18 AWG
C474	101 TURBINE CONTROL PANEL	1	2	18 AWG

390 JB034 TURBINE ROOF LOW LEVEL

cable	To	lev	#cnd	Gauge
C201	101 TURBINE CONTROL PANEL	1	8	18 AWG

392 JB004 ACCESSORY BASE LEVEL 4

cable	To	lev	#cnd	Gauge
C012	334 PEECC MOTOR CONTROL CENTER	4	3	4 AWG
C012C	334 PEECC MOTOR CONTROL CENTER	4	3	10 AWG
C028	334 PEECC MOTOR CONTROL CENTER	4	3	8 AWG
C102	334 PEECC MOTOR CONTROL CENTER	4	3	8 AWG
C125	334 PEECC MOTOR CONTROL CENTER	4	5	10 AWG
C251	334 PEECC MOTOR CONTROL CENTER	4	3	6 AWG
S884	429 88AB-1 MCC CUBICLE	4	3	4 AWG

427 LIQUID FUEL FORWARDING SKID JB01

cable	To	lev	#cnd	Gauge
S893	101 TURBINE CONTROL PANEL	3	4	12 AWG
S894	101 TURBINE CONTROL PANEL	1	2	18 AWG

428 JB090 COOLING WATER MODULE LEVEL 3

cable	To	lev	#cnd	Gauge
C531	101 TURBINE CONTROL PANEL	3	6	12 AWG
C532	339 JB298 PEECC LEVEL 3	3	12	12 AWG
C544	339 JB298 PEECC LEVEL 3	3	12	10 AWG

429 88AB-1 MCC CUBICLE

cable	To	lev	#cnd	Gauge
S884	392 JB004 ACCESSORY BASE LEVEL 4	4	3	4 AWG
S886	115 JB002 ACCESSORY BAST LEVEL 3	3	2	10 AWG
S881	101 TURBINE CONTROL PANEL	3	8	12 AWG

430 DEMIN WATER FORWARDING JB01

cable	To	lev	#cnd	Gauge
S891	101 TURBINE CONTROL PANEL	3	4	12 AWG
S892	101 TURBINE CONTROL PANEL	1	2	18 AWG

438 JB090A COOLING WATER MODULE LEVEL 4

Cable	to	lev	#cnd	Gauge
C533	334 PEECC MOTOR CONTROL CENTER	4	3	
C534	334 PEECC MOTOR CONTROL CENTER	4	3	
C535	334 PEECC MOTOR CONTROL CENTER	4	3	
C537	334 PEECC MOTOR CONTROL CENTER	4	3	
C538	334 PEECC MOTOR CONTROL CENTER	4	3	

441 JB131 GAS FUEL MODULE LEVEL 4

Cable	to	lev	#cnd	Gauge
C149	334 PEECC MOTOR CONTROL CENTER	4	3	8 AWG
C809	334 PEECC MOTOR CONTROL CENTER	4	3	10 AWG
C809A	339 JB298 PEECC LEVEL 3	3	2	10 AWG
C817	334 PEECC MOTOR CONTROL CENTER	4	3	10 AWG
C817A	339 JB298 PEECC LEVEL 3	3	2	10 AWG

447 INLET HEATING CONTROL VALVE

Cable	to	lev	#cnd	gauge
C516A	101 TURBINE CONTROL PANEL	3	2	18 AWG
C517A	101 TURBINE CONTROL PANEL	1	2	18 AWG
C517	101 TURBINE CONTROL PANEL	1	2	18 AWG
C517D	101 TURBINE CONTROL PANEL	1	2	18 AWG
C517E	101 TURBINE CONTROL PANEL	1	2	18 AWG

449 JB078 TURBINE AIR INLET FILTER COMPARTMENT

Cable	to	lev	#cnd	gauge
C512	101 TURBINE CONTROL PANEL	3	7	12 AWG
C515	339 JB298 PEECC LEVEL 3	3	3	6 AWG

455 JB297 AIR PROCESS SKID LEVEL 3

Cable	to	lev	#cnd	gauge
C725	339 JB298 PEECC LEVEL 3	3	3	12 AWG
C727	101 TURBINE CONTROL PANEL	3	6	12 AWG

456 JB010 WATER WASH SKID LEVEL 3

Cable	to	lev	#cnd	gauge
C667-1	101 TURBINE CONTROL PANEL	1	12	12 AWG
C667-2	101 TURBINE CONTROL PANEL	1	12	12 AWG
C667-3	101 TURBINE CONTROL PANEL	1	12	12 AWG
C667-4	101 TURBINE CONTROL PANEL	1	12	12 AWG

514 CUSTOMER SWITCHGEAR

Cable	to	lev	#cnd	gauge
C480	334 PEECC MOTOR CONTROL CENTER	3	3	12 AWG
C481	334 PEECC MOTOR CONTROL CENTER	3	2	10 AWG

562 STATIC VOLTAGE REGULATOR – EX2000R

Cable	to	lev	#cnd	gauge
C094B	135 JB005A GENERATOR COMPARTMENT LOW LEVEL	1	8	18 AWG
C123	136 JB005B GENERATOR COMPARTMENT LEVEL 3	3	6	10 AWG
C148	146 METALCLAD SWITCHGEAR	3	4	10 AWG

563 JB386 GAS SCRUBBER LEVEL 3

Cable	to	lev	#cnd	gauge
C819	101 TURBINE CONTROL PANEL	3	19	12 AWG

581 JB005N GENERATOR NEUTRAL ACCESSORIES COMPARTMENT LEVEL 3

Cable	to	lev	#cnd	gauge
C236A	102 GENERATOR CONTROL PANEL	3	12	10 AWG
C236B	102 GENERATOR CONTROL PANEL	3	12	10 AWG
C249	339 JB298 PEECC LEVEL 3	3	3	10 AWG

611 INLET HEATING ISOLATION VALVE

Cable	to	lev	#cnd	gauge
C516E	101 TURBINE CONTROL PANEL	3	2	12 AWG

622 FUEL GAS HEATER CONTROL PANEL

Cable	to	lev	#cnd	gauge
C411	183 AUXILIARY POWER TRANSFORMER	4	3	
C413	753 JB309 FUEL GAS HEATING SKID LEVEL 3	1	6	18 AWG
C414	753 JB309 FUEL GAS HEATING SKID LEVEL 3	3	3	12 AWG
C414A	101 TURBINE CONTROL PANEL	3	7	12 AWG

742 SITE LIGHTS

Cable	to	lev	#cnd	gauge
C403	334 PEECC MOTOR CONTROL CENTER	4	3	

751 FLAME DETECTOR INTERFACE MODULE PRIMARY

Cable	to	lev	#cnd	gauge
C009A	234 JB020B TURBINE OFF BASE RACK LOW LEVEL	3S	8	18 AWG

752 FLAME DETECTOR INTERFACE MODULE SECONDARY

Cable	to	lev	#cnd	gauge
C009B	234 JB020B TURBINE OFF BASE RACK LOW LEVEL	3S	8	18 AWG

753 JB309 FUEL GAS HEATING SKID LEVEL 3

Cable	to	lev	#cnd	gauge
C413	622 FUEL GAS HEATER CONTROL PANEL	1	6	18 AWG
C414	622 FUEL GAS HEATER CONTROL PANEL	3	3	12 AWG

901 CUSTOMER GROUND GRID

cable	to	lev	#cnd	gauge
CG1007	254 CUSTOMER DECIVES--PANELS	4	1	1/0 AWG
CG1008	333 PACKAGED DELECTRICAL-ELECTRIC CONTROL CENTER-PEECC	4	2	4/0 AWG
CG1031	230 JB019A TURBINE OFF BASE RACK LEVEL 3	4	1	1/0 AWG
CG1032	231 JB019B TURBINE OFF BASE RACK LEVEL 3	4	1	1/0 AWG
CG1033	233 JB020A TURBINE OFF BASE RACK LOW LEVEL	4	1	1/0 AWG
CG1034	234 JB020B TURBINE OFF BASE RACK LOW LEVEL	4	1	1/0 AWG
CG1038	381 JB021A TURBINE OFF BASE RACK LEVEL 4	4	1	1/0 AWG
CG1051	280 GENERATOR NEUTRAL ACCESSORY COMPARTMENT GNAC	4	2	4/0 AWG
CG1059	335 BUS DUCT	4	2	4/0 AWG
CG902	157 TURBINE AIR INLET FILTER COMPARTMENT	4	2	4/0 AWG
CG906	182 MAIN TRANSFORMER (STEP UP)	4	2	4/0 AWG
CG907	146 METALCLAD SWITCHGEAR	4	2	4/0 AWG
CG910	161 COOLING WATER MODULE #1	4	2	4/0 AWG
CG914	121 TURBINE BASE	4	2	4/0 AWG
CG915	119 ACCESSORY BASE	4	2	4/0 AWG
CG920	134 GENERATOR COMPARTMENT	4	2	4/0 AWG
CG926	171 GAS FUEL (VALVE) MODULE	4	2	4/0 AWG
CG927	176 LUBE OIL DEMISTER (TURBINE)	4	2	4/0 AWG
CG928	252 WATER WASH SKID	4	2	4/0 AWG
CG929	172 AIR PROCESS SKID	4	2	4/0 AWG
CG931	183 AUXILIARY POWER TRANSFORMER	4	2	4/0 AWG
CG933	201 LIMIT AMP	4	2	4/0 AWG
CG954	158 GAS SCRUBBER	4	2	4/0 AWG
CG964	128 EXHAUST FRAME BLOWER 88TK-1	4	2	4/0 AWG
CG965	129 EXHASUT FRAME BLOWER 88TK-2	4	2	4/0 AWG
CG983	283 FIRE PROTECTION DEVICES	4	2	4/0 AWG

938 CEMS SYSTEM

cable	to	lev	#cnd	gauge
C404	334 PEECC MOTOR CONTROL CENTER	4	3	

939 UNIT AREA OUTDOOR LIGHTING

cable	to	lev	#cnd	gauge
C402	334 PEECC MOTOR CONTROL CENTER	4	3	

940 DEMIN WATER FORWARDING JB02

cable	To	lev	#cnd	Gauge
C889	942 CUSTOMER SUPPLIED MCC	4	3	CUST
C890	942 CUSTOMER SUPPLIED MCC	4	3	CUST

941 LIQUID FUEL FORWARDING JB02

cable	To	lev	#cnd	Gauge
C887	942 CUSTOMER SUPPLIED MCC	4	3	CUST
C888	942 CUSTOMER SUPPLIED MCC	4	3	CUST

942 CUSTOMER SUPPLIED MCC

cable	To	lev	#cnd	Gauge
C880	101 TURBINE CONTROL PANEL	3	19	12 AWG
C883	101 TURBINE CONTROL PANEL	3	19	12 AWG
C887	941 DEMIN WATER FORWARDING JB02	4	3	CUST
C888	941 DEMIN WATER FORWARDING JB02	4	3	CUST
C889	940 LIQUID FUEL FORWARDING JB02	4	3	CUST
C890	940 LIQUID FUEL FORWARDING JB02	4	3	CUST

Notes

1. "C" PREFIX INDICATES CABLE SUPPLIED BY OTHERS THAN GE-GAS TURBINE DIVISION. CONTROL CABLES WITH "C" PREFIX CONTAIN A NOMINAL NUMBER OF SPARES.
2. "C" PREFIX CABLES TO BE RATED NOT LESS THAN 90 DEG. C.
3. CABLE GLANDS/STRESS RELIEFS FOR CONNECTING CABLES AT JUNCTION BOXES/DEVICES ARE TO BE SUPPLIED BY OTHERS.
4. BEND RADIUS – BENDS SHALL BE SO MADE THAT CABLE WILL NOT BE DAMAGED. AND RADIUS OF THE INNER EDGE OF ANY BEND SHALL NOT BE LESS THAN SHOWN IN TABLE. THIS RADIUS DOES NOT INCLUDE PULLING TENSINO CALCULATION. SEE ML ITEM 0435 FOR FURTHER DEFINITION.
5. CABLES SUPPLIED BY OTHERS THAT ARE SHOWN ON THIS DWG. ARE ONLY FOR THOSE WHICH INTERFACE WITH GAS TURBINE SUPPLIED EQUIPMENT.
6. MAKEUP OF "C" PREFIX CABLES ARE SUGGESTED TO ENSURE SUFFICIENT CONDUCTOR COUNT.
7. "C" PREFIX CABLES FOR LEVEL 4 AND LEFEL 5 POWER SUPPLY ARE SIZED BY OTHERS.
8. SEE OUTLINE. GAS TURBINE PACKAGE CONNECTION – ELECTRICAL DIAG. ML ITEM 0301 FOR LOCATION OF CABLE DESTINATION POINTS (JB'S. ETC.) WITHIN EACH ON-BASE COMPARTMENT.
9. CABLE TO BE INSTALLED WITH ADEQUATE SEPARATION BETWEEN DIFFERENT LEVELS AND IN PROPER CONDUIT OR RACEWAY MATERIAL. SEE M.L. ITEM 0435. AND IN ACCORDANCE WITH LATEST ELECTRICAL CODES.
10. GROUND CABLES ARE TO BE SUPPLIED ON ALL EQUIPMENT. TWO CABLE CONNECTIONS ARE DIAGONALLY OPPOSED.
11. ONE CABLE REQUIRED PER SITE.
12. MODIFIED OR ADDED CABLES ARE IN RED TEXT.

N° PLANO: AGM-02-0204-PLA-E-0007 | 0

NOTES:

1. JUNCTION BOXES WITH ONE OR TWO UNIDENTIDIED TERMINAL BOARDS:
   > WHEN ONLY ONE TERMINAL BOARD IS IN A JUNCTION BOX ASSEMBLY IT IS TO BE UNDERSTOOD THAT IT IS TERMINAL BOARD "A".
   > WHEN THERE ARE TWO TERMINAL BOARDS IN A JUNCTION BOX ASSEMBLY:
   IN THE VERTICAL POSITION THE LEFT TERMINAL BOARD IS "A" THE RIGHT TERMINAL BOARD IS "B".
   IN THE HORIZONTAL POSITION THE UPPER TERMINAL BOARD IS "A", THE LOWER TERMINAL BOARD IS "B"
2. NEUTRAL WIRES 503, 572, 2503, 5800, 5801, AND 6503 SERIES REQUIRE STANDARD WIRE MARKER BE REPLACED WITH 4" LONG WIRE MARKER 323A8059 AND WITH BLACK BALL POINT PEN WRITE IN NEUTRAL WIRE NUMBER WITH IT'S "–" NUMBER. THIS IS REQUIRED TO MEET WIRE COLOR CODING REQUIREMENTS FOR NEUTRAL WIRES.
3. DUE TO VARIATIONS IN APPLICATION OF MOTORS, CONNECTIONS TO POLYPHASE (3–PHASE) MOTORS ARE FOR REFERENCE ONLY. THEIR CORRECT ROTATION WITH RESPECT TO THE DRIVEN EQUIPMENT MUST BE VERIFIED DURING FACTORY TEST, AND THE MOTOR LEADS TRANSPOSED IF NECESSARY FOR THE CORRECT ROTATION. IF THE LEADS ARE TRANSPOSED, DO NOT CHANGE THE MARKINGS ON THE MOTOR LEADS OR ON THE WIRE TO THE MOTOR.
4. REFER TO 255A4540 FOR WIRING APPLIED PRACTICE.
5. 23QT DEVICES MUST USE RING TYPE SOLDERLESS TERMINAL PART NO. 329A3343P012.
6. FOR DEVICES WITH INSUFFICIENT SPACE OR SPRING SPADE TERMINALS, THE APPROPRIATE SIZED RING TONGUE TERMINAL MAY BE USED.
7. FIR PROTECTION DEVICES MUST USE A RING TYPE TERMINAL PART 2015 FOR ALL CONNECTION POINTS INCLUDING JUNCTION BOX TERMINATIONS.
8. WHEN TERMINATING LEAD TO LEAD FOR WIRE SIZES 14–20 AWG USE PART 2020 114A2212P001.
9. FLAME DETECTORS (28FD'S), ID USED, SHIELD TERMINATION RING ASSEMBLIES ARE TO BE INSULATED BY WRAPPING WITH FIBERGLASS TAPE.
10. TO INSTALL AND LAND SHIELDS ON CABLES THAT DO NOT HAVE AN INTEGRAL SHIELD WIRE USE PART 2068.
    (SHIELD TERMINATION ASSY KIT) FROM THE MLI–0466, 0467 AND 0470 BILL OF MATERIAL. WHEN SHIELDING A TWO–CONDUCTOR CABLE, USE PART 351A3406P003 (YELLOW) FROM THE KIT AND WHEN SHIELDING A THREE–CONDUCTOR CABLE USE 351A3406P004 (GREEN). USE THE SPRING SPADE TERMINAL (277A2563P002) UNLESS SPECIFIC CUSTOMER REQUIREMENTS MANDATE THE USE OF RING TONGUE TERMINALS IN WHICH CASE USE 329A3343P001.
11. VIBRATION SENSOR (39V–1A, 1B, 2A, 3A & 3B) SHIELD GROUNDS MAY BE GREEN IF PREPARED AT FINAL ASSEMBLY OR BLACK ID USING VENDOR PREPARED TERMINATIONS.
12. TURBINE COMPARTMENT ONLY – FOR ELECTRICAL DEVICE 39V–2A, WHEN USING PART NUMBER 2572 (323A8923P001) THE ORANGE WIRE SHALL BE CONNECTED TO THE WIRE ELEMENT NUMBER 3232 AND THE BLACK WIRE SHALL BE CONNECTED TO WIRE ELEMANT NUMBER 3233.
13. SYSTEM PARAMETERS AND SPECIFICATIONS ARE BASED ON GE DRAWING 123E2968 (PROVIDED BY CUSTOMER). INCLUDING REQUIREMENTS FOR DUAL FUEL SYSTEMS PER CUSTOMER SCOPE OF WORK .
14. THIS DRAWING IS A REPRESNTATION OF DUAL FUEL CONFIGURATION WHICH INCLUDES ORIGINAL, MODIFIED, AND NEW EQUIPMENT.

I M P O R T A N T

ESTE PLANO FUE ELABORADO EN AUTOCAD V.2008
CUALQUIER MODIFICACION REALIZADA EN CAMPO DEBERA SER NOTIFICADO A LA UNIDAD RESPONSABLE.
QUEDA PROHIBIDO CORREGIR ESTE PLANO SIN AUTORIZACION DE ESTA UNIDAD.

ALL DIMENSIONS IN BRACKETS [ ] ARE MILLIMETER; EXPRESSED DIMENSIONS ARE INCHES

WIRE GAUGE SIZE	MOTOR LEAD TERMINATION TABLE	
12 AWG	247B7312G001	
10 AWG	247B7312G001	
8 AWG	247B7312G002	
6 AWG	247B7312G003	
4 AWG	247B7312G004	
2 AWG	247B7312G005	
1 AWG	247B7312G006	
1/0	247B7312G006	
2/0	247B7312G007	
3/0	247B7312G008	
4/0	247B7312G009	
250 MCM	201B2858G002	
350 MCM	201B2858G001	

WIRE REFERENCE CHART		
GUAGE	FINO #	G. E. DRAWING
20 AWG	2561	362A2370P028
18 AWG	2562	362A2370P017
	2571	362A2373P001
	2572	362A2372P001
	2573	362A2374P001
	2578	362A2371P001
16 AWG	2563	362A2370P016
	2570	357A1591P001
14 AWG	2551	362A2369P001
	2564	362A2370P015
12 AWG	2552	362A2369P002
	2565	362A2370P014
10 AWG	2553	362A2369P003
	2566	362A2370P013
8 AWG	2554	362A2369P004
	2567	362A2370P012
6 AWG	2555	362A2369P005
4 AWG	2556	362A2369P006
2 AWG	2557	362A2369P007

WIRE GAUGE SIZE	SCREW SIZE									
	NO. 4	NO. 5	NO. 6	NO. 8	NO. 10	1/4	3/16	3/8	1/2	5/8
	0.112	0.125	0.138	0.164	0.19	0.25	0.312	0.375	0.5	0.625
20 AWG	277A2563P001	277A2563P013	277A2563P002	277A2563P003	277A2563P004					
18 AWG	277A2563P001	277A2563P013	277A2563P002	277A2563P003	277A2563P004					
16 AWG	277A2563P001	277A2563P013	277A2563P002	277A2563P003	277A2563P004					
14 AWG		277A2563P014	277A2563P005	277A2563P006	277A2563P007					
12 AWG		277A2563P014	277A2563P005	277A2563P006	277A2563P007	329A3343P010	277A2981P003	248A5762P001		
10 AWG			277A2563P009	277A2563P010	277A2563P011	277A2563P012	277A2981P003	248A5762P001		
8 AWG				277A2981P031	277A2981P033	277A2981P006	277A2981P007	277A2981P008		
6 AWG					277A2981P009	277A2981P010	277A2981P011	277A2981P012		
4 AWG						277A2981P013	277A2981P014	277A2981P015		
2 AWG						277A2981P016	277A2981P017			
1 AWG						277A2981P019		277A2981P020		
1/0						277A2981P019		277A2981P020		
2/0								255A4704P006	255A4704P005	
3/0								255A4704P006	255A4704P005	
4/0									255A4704P001	
250 MCM									255A4704P001	
350 MCM									255A4704P002	
500 MCM										255A4704P003

WIRE GAUGE SIZE	SCREW SIZE									
	NO. 4	NO. 5	NO. 6	NO. 8	NO. 10	1/4	3/16	3/8	1/2	5/8
	0.112	0.125	0.138	0.164	0.19	0.25	0.312	0.375	0.5	0.625
20 AWG	329A3343P001	329A3343P002	329A3343P003							
18 AWG	329A3343P001	329A3343P002	329A3343P003							
16 AWG	329A3343P001	329A3343P002	329A3343P003							
14 AWG	329A3343P004	329A3343P005	329A3343P006							
12 AWG	329A3343P007	329A3343P008	329A3343P009			248A5762P001				
10 AWG	329A3343P007	329A3343P008	329A3343P009	329A3343P010						
8 AWG				227A2981P006	227A2981P007	227A2981P008				
6 AWG			227A2981P009	227A2981P010	227A2981P011	227A2981P012				
4 AWG				227A2981P013	227A2981P014	227A2981P015				
2 AWG				227A2981P016	227A2981P017					
1 AWG				227A2981P019		227A2981P020				
1/0				227A2981P019		227A2981P020				
2/0						255A4704P006	255A4704P005		255A4704P005	
3/0						255A4704P006	255A4704P005		255A4704P005	
4/0							255A4704P001		255A4704P001	
250 MCM							255A4704P001		255A4704P001	
350 MCM							255A4704P002		255A4704P002	
500 MCM								255A4704P003		255A4704P003

N° DE DOCUMENTO	DESCRIPCIÓN	REV.	FECHA
AGM-02-0204-PLA-I-0046	DEVICE SUMMARY		

DOCUMENTOS DE REFERENCIA

REV.	FECHA	REVISIONES O MODIFICACIONES	DIBUJO	REVISO	APROBO
0	25/07/11	ISSUED FOR CONSTRUCTION	SAB	CB	TK

REF. FABRICANTE		
REF. FABRICANTE	FABRICANTE	O/C:

DERWICK ASSOCIATES CORP. | ProEnergy SERVICES | CORPOELEC CORPORACIÓN ELÉCTRICA NACIONAL | La Electricidad de Caracas | GERENCIA FUNCIONAL DE INGENIERÍA Y PROYECTOS SENECA

AMPLIACIÓN DE LA CAPACIDAD DE GENERACIÓN Y TRANSPORTE DE ELECTRICIDAD EN LA ISLA DE MARGARITA

TURBINE CONNECTION DIAGRAM DUAL FUEL MOD. UNITS 298034 & 298035 (MLI 0401)

PLANO N°:	REV:		
PROYECTO N°: 409–2956–1			
CALCULO:	PROYECTO:	ESCALA: NONE	PLANO No:
REVISADO: C. Brown	CALCULO:	FECHA: 25/07/11	AGM-02-0204-PLA-E-0007
DIBUJO: S. Boerckel	REVISADO: J. Castillo	DISK. N°	
APROBADO: T. Koontz	DIBUJO:	ESC./PLOTEO:	
ARCHIVO:	APROBADO: M. Monticelli	ARCHIVO:	PAGINA: 1 DE: 15 REV. 0

F_A1_11 – 841x594mm

LINEA DE CORTE DE ORIGINAL
LINEA DE CORTE DE COPIA

N° PLANO: AGM-02-0204-PLA-E-0007 | 0

IMPORTANTE

ESTE PLANO FUE ELABORADO EN AUTOCAD V.2008
CUALQUIER MODIFICACION REALIZADA EN CAMPO
DEBERA SER NOTIFICADO A LA UNIDAD
RESPONSABLE.
QUEDA PROHIBIDO CORREGIR ESTE PLANO SIN
AUTORIZACION DE ESTA UNIDAD.

ALL DIMENSIONS IN BRACKETS [ ]
ARE MILLIMETER; EXPRESSED
DIMENSIONS ARE INCHES

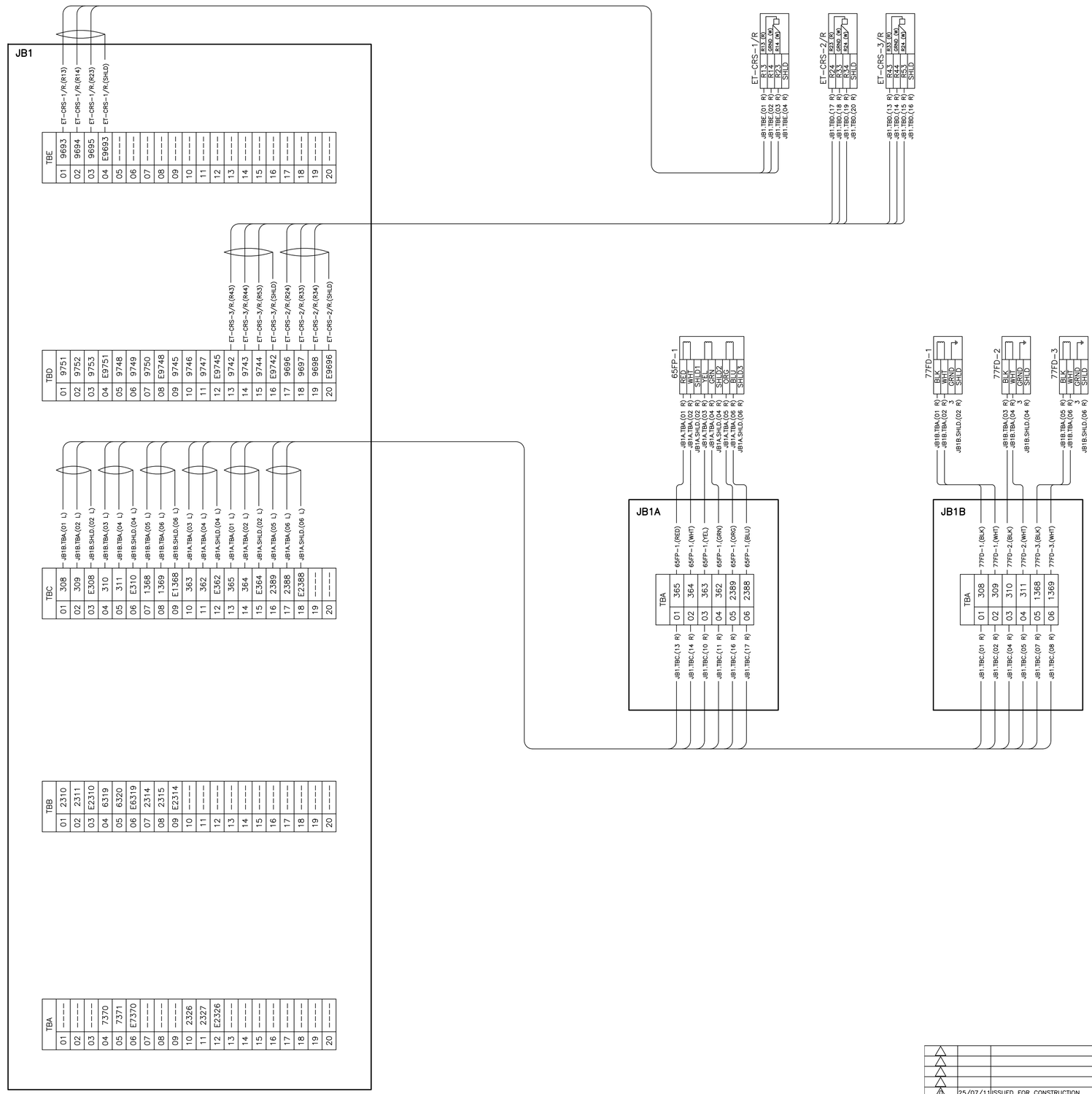

N° DE DOCUMENTO	DESCRIPCIÓN	REV.	FECHA
AGM-02-0204-PLA-I-0046	DEVICE SUMMARY		

DOCUMENTOS DE REFERENCIA

REV.	FECHA	REVISIONES O MODIFICACIONES	DIBUJO	REVISO	APROBO
0	25/07/11	ISSUED FOR CONSTRUCTION	SAB	CB	TK

REF. FABRICANTE		
REF. FABRICANTE	FABRICANTE	O/C:

DERWICK ASSOCIATES CORP. | ProEnergy SERVICES | CORPOELEC | La Electricidad de Caracas | GERENCIA FUNCIONAL DE INGENIERÍA Y PROYECTOS | SENECA

AMPLIACIÓN DE LA CAPACIDAD DE GENERACIÓN Y TRANSPORTE DE ELECTRICIDAD EN LA ISLA DE MARGARITA

TURBINE CONNECTION DIAGRAM
DUAL FUEL MOD. UNITS 298034 & 298035 (MLI 0401)

PLANO N°:	REV:		
PROYECTO N°: 409-2956-1			
CALCULO:	PROYECTO:	ESCALA: NONE	PLANO No: AGM-02-0204-PLA-E-0007
REVISADO: C. Brown	CALCULO:	FECHA: 25/07/11	
DIBUJO: S. Boerckel	REVISADO: J. Castillo	DISK. N°	
APROBADO: T. Koontz	DIBUJO:	ESC./PLOTEO:	
ARCHIVO:	APROBADO: M. Monticelli	ARCHIVO:	PAGINA: 2 DE: 15 — REV. 0

F_A1_11 – 841x594mm

LINEA DE CORTE DE COPIA
LINEA DE CORTE DE ORIGINAL

LINEA DE CORTE DE ORIGINAL
LINEA DE CORTE DE COPIA

N° PLANO: AGM-02-0204-PLA-E-0007

IMPORTANTE
ESTE PLANO FUE ELABORADO EN AUTOCAD V.2008
CUALQUIER MODIFICACION REALIZADA EN CAMPO DEBERA SER NOTIFICADO A LA UNIDAD RESPONSABLE.
QUEDA PROHIBIDO CORREGIR ESTE PLANO SIN AUTORIZACION DE ESTA UNIDAD.

ALL DIMENSIONS IN BRACKETS [ ] ARE MILLIMETER; EXPRESSED DIMENSIONS ARE INCHES

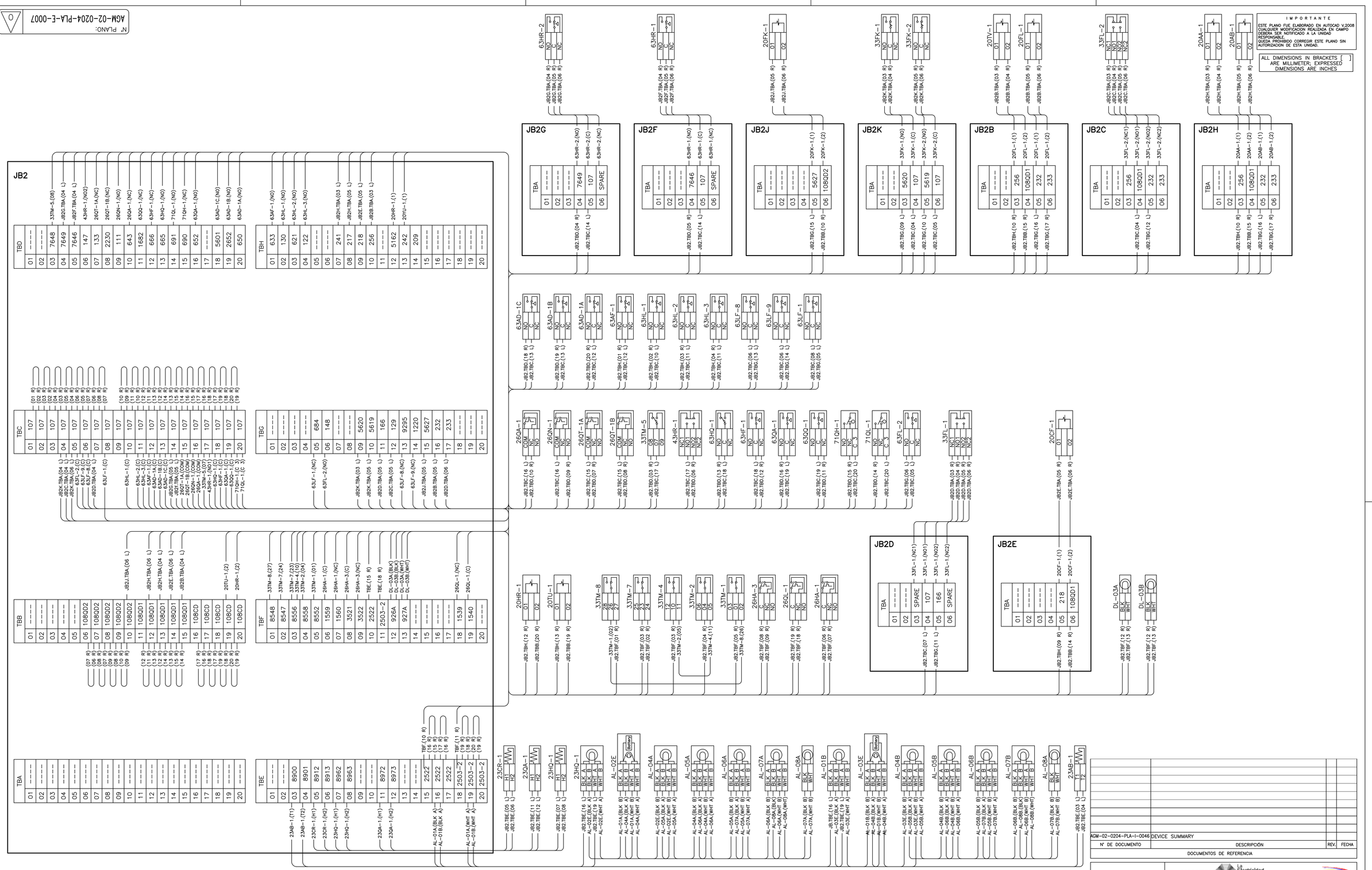

REV.	FECHA	REVISIONES O MODIFICACIONES	DIBUJO	REVISO	APROBO
0	25/07/11	ISSUED FOR CONSTRUCTION	SAB	CB	TK

REF. FABRICANTE	
REF. FABRICANTE	FABRICANTE / O/C:

AGM-02-0204-PLA-I-0046 DEVICE SUMMARY

N° DE DOCUMENTO	DESCRIPCIÓN	REV.	FECHA

DOCUMENTOS DE REFERENCIA

DERWICK ASSOCIATES CORP. · ProEnergy SERVICES · CORPOELEC · La Electricidad de Caracas · GERENCIA FUNCIONAL DE INGENIERIA Y PROYECTOS · SENECA

AMPLIACIÓN DE LA CAPACIDAD DE GENERACIÓN Y TRANSPORTE DE ELECTRICIDAD EN LA ISLA DE MARGARITA

TURBINE CONNECTION DIAGRAM
DUAL FUEL MOD. UNITS 298034 & 298035 (MLI 0401)

PLANO N°:	REV:		
PROYECTO N°: 409-2956-1			
CALCULO:	PROYECTO:	ESCALA: NONE	PLANO No: AGM-02-0204-PLA-E-0007
REVISADO: C. Brown	CALCULO:	FECHA: 25/07/11	
DIBUJO: S. Boerckel	REVISADO: J. Castillo	DISK. N°	
APROBADO: T. Koontz	DIBUJO:	ESC./PLOTEO:	
ARCHIVO:	APROBADO: M. Monticelli	ARCHIVO:	PAGINA: 3 DE: 15 REV. 0

F_A1_11 – 841x594mm

LINEA DE CORTE DE COPIA
LINEA DE CORTE DE ORIGINAL

N° PLANO: AGM-02-0204-PLA-E-0007 | 0

I M P O R T A N T E

ESTE PLANO FUE ELABORADO EN AUTOCAD V.2008
CUALQUIER MODIFICACION REALIZADA EN CAMPO DEBERA SER NOTIFICADO A LA UNIDAD RESPONSABLE.
QUEDA PROHIBIDO CORREGIR ESTE PLANO SIN AUTORIZACION DE ESTA UNIDAD.

ALL DIMENSIONS IN BRACKETS [ ] ARE MILLIMETER; EXPRESSED DIMENSIONS ARE INCHES

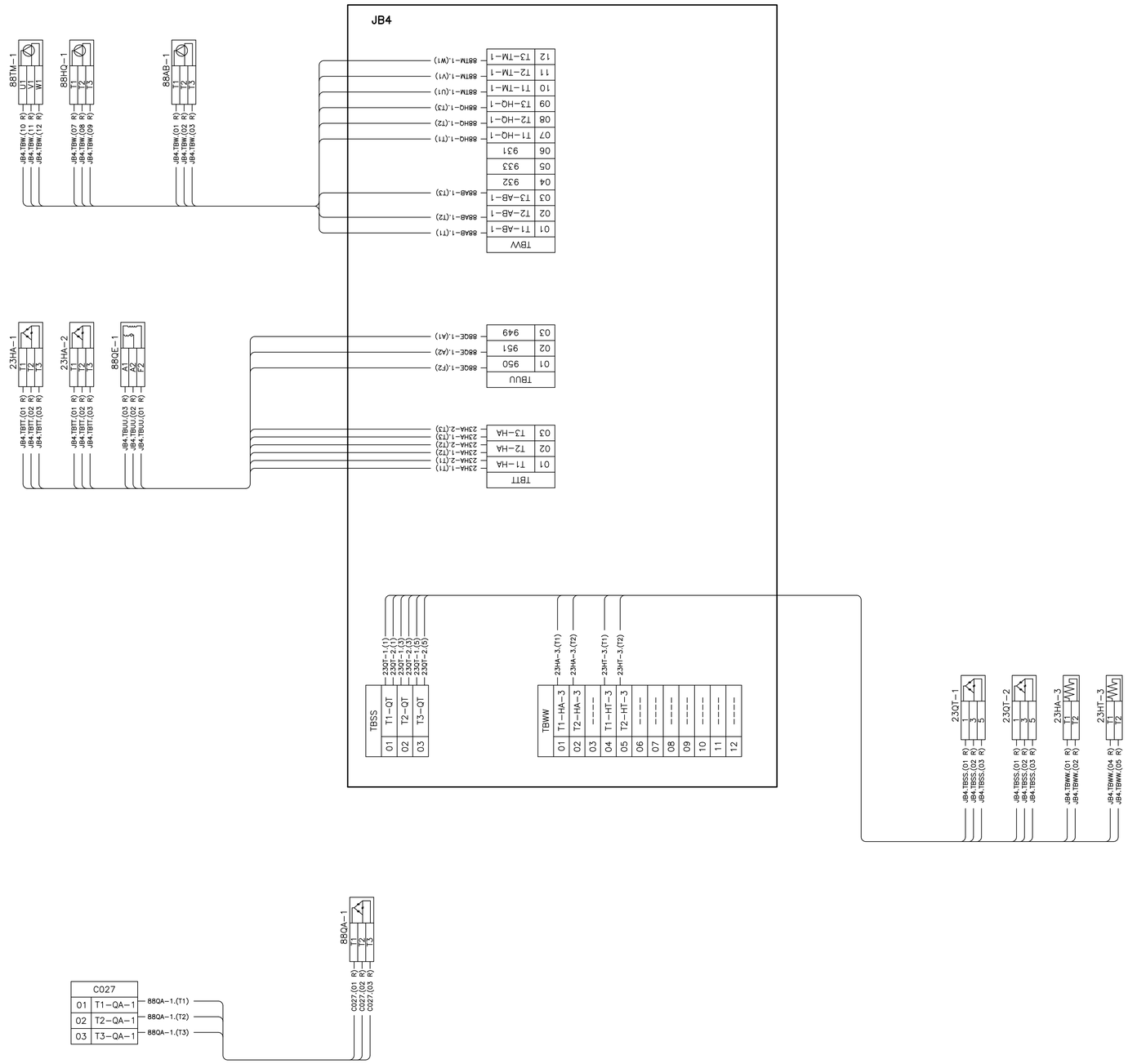

N° DE DOCUMENTO	DESCRIPCIÓN	REV.	FECHA
AGM-02-0204-PLA-I-0046	DEVICE SUMMARY		

DOCUMENTOS DE REFERENCIA

REV.	FECHA	REVISIONES O MODIFICACIONES	DIBUJO	REVISO	APROBO
0	25/07/11	ISSUED FOR CONSTRUCTION	SAB	CB	TK

REF. FABRICANTE	FABRICANTE	O/C:
REF. FABRICANTE		

DERWICK · ProEnergy Services · CORPOELEC · La Electricidad de Caracas · SENECA

AMPLIACIÓN DE LA CAPACIDAD DE GENERACIÓN Y TRANSPORTE DE ELECTRICIDAD EN LA ISLA DE MARGARITA

TURBINE CONNECTION DIAGRAM DUAL FUEL MOD. UNITS 298034 & 298035 (MLI 0401)

PROYECTO N°: 409-2956-1
PLANO N°: AGM-02-0204-PLA-E-0007 REV: 0

CALCULO:	PROYECTO:	ESCALA: NONE	PLANO No:
REVISADO: C. Brown	CALCULO:	FECHA: 25/07/11	
DIBUJO: S. Boerckel	REVISADO: J. Castillo	DISK. N°	
APROBADO: T. Koontz	DIBUJO:	ESC./PLOTEO:	
ARCHIVO:	APROBADO: M. Monticelli	ARCHIVO:	PAGINA: 4 DE: 15

F_A1_11 – 841x594mm

N° PLANO: AGM-02-0204-PLA-E-0007 | 0

ALL DIMENSIONS IN BRACKETS [ ]
ARE MILLIMETER; EXPRESSED
DIMENSIONS ARE INCHES

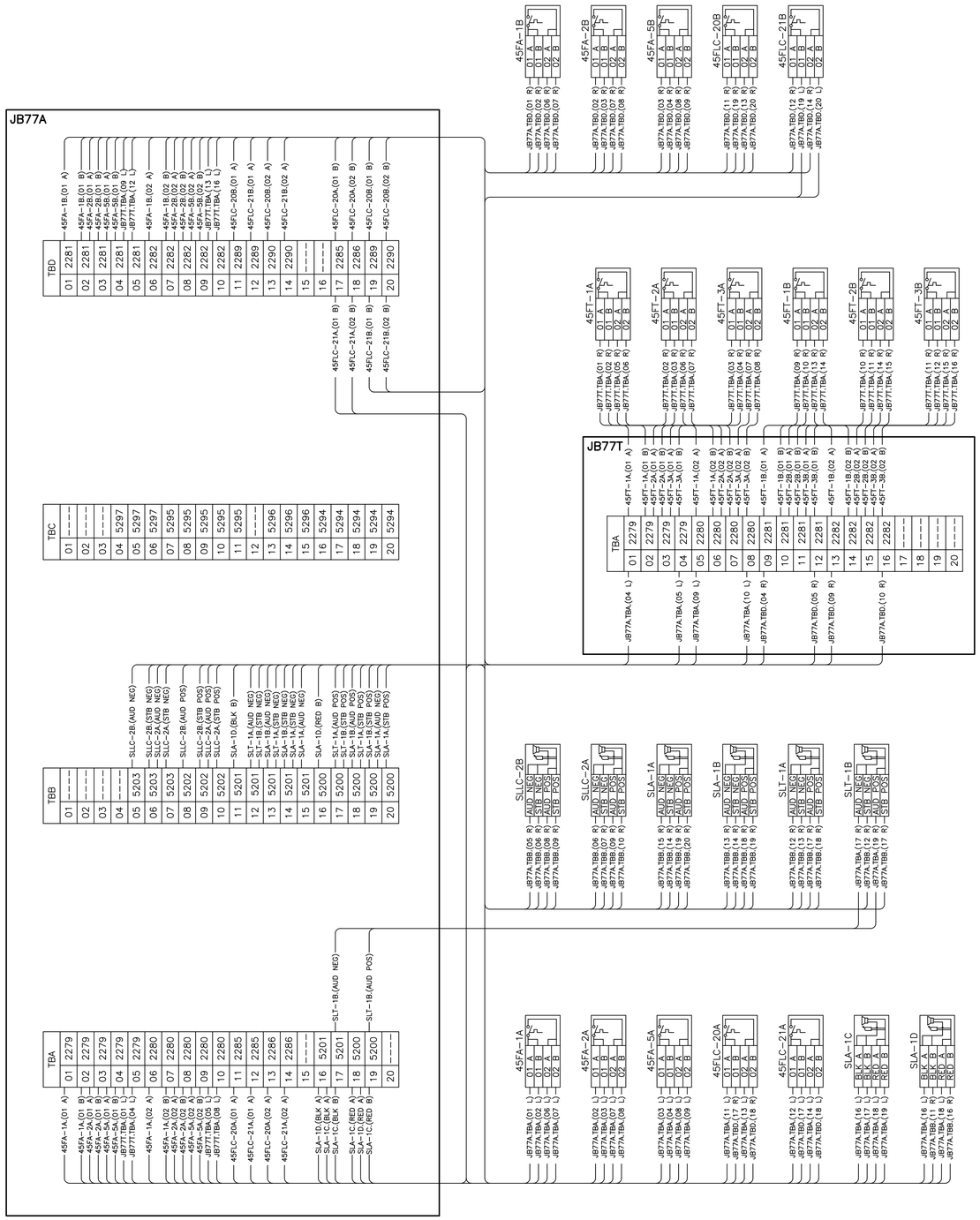

AGM-02-0204-PLA-I-0046	DEVICE SUMMARY			
N° DE DOCUMENTO	DESCRIPCIÓN		REV.	FECHA

DOCUMENTOS DE REFERENCIA

REV.	FECHA	REVISIONES O MODIFICACIONES	DIBUJO	REVISO	APROBO
0	25/07/11	ISSUED FOR CONSTRUCTION	SAB	CB	TK

REF. FABRICANTE		
REF. FABRICANTE	FABRICANTE	O/C:

DERWICK ASSOCIATES CORP. | ProEnergy SERVICES | CORPOELEC CORPORACIÓN ELÉCTRICA NACIONAL | La Electricidad de Caracas | GERENCIA FUNCIONAL DE INGENIERÍA Y PROYECTOS | SENECA

AMPLIACIÓN DE LA CAPACIDAD DE GENERACIÓN Y TRANSPORTE DE ELECTRICIDAD EN LA ISLA DE MARGARITA

TURBINE CONNECTION DIAGRAM
DUAL FUEL MOD. UNITS 298034 & 298035 (MLI 0401)

PLANO N°: | REV:
PROYECTO N°: 409-2956-1

CALCULO:	PROYECTO:	ESCALA: NONE	PLANO No: AGM-02-0204-PLA-E-0007
REVISADO: C. Brown	CALCULO:	FECHA: 25/07/11	
DIBUJO: S. Boerckel	REVISADO: J. Castillo	DISK. N°	
APROBADO: T. Koontz	DIBUJO:	ESC./PLOTEO:	
ARCHIVO:	APROBADO: M. Monticelli	ARCHIVO:	PAGINA: 5 DE: 15 — REV. 0

F_A1_11 – 841x594mm

LINEA DE CORTE DE ORIGINAL
LINEA DE CORTE DE COPIA

N° PLANO: AGM-02-0204-PLA-E-0007 | 0

IMPORTANTE

ESTE PLANO FUE ELABORADO EN AUTOCAD V.2008
CUALQUIER MODIFICACION REALIZADA EN CAMPO
DEBERA SER NOTIFICADO A LA UNIDAD
RESPONSABLE.
QUEDA PROHIBIDO CORREGIR ESTE PLANO SIN
AUTORIZACION DE ESTA UNIDAD.

ALL DIMENSIONS IN BRACKETS [ ]
ARE MILLIMETER; EXPRESSED
DIMENSIONS ARE INCHES

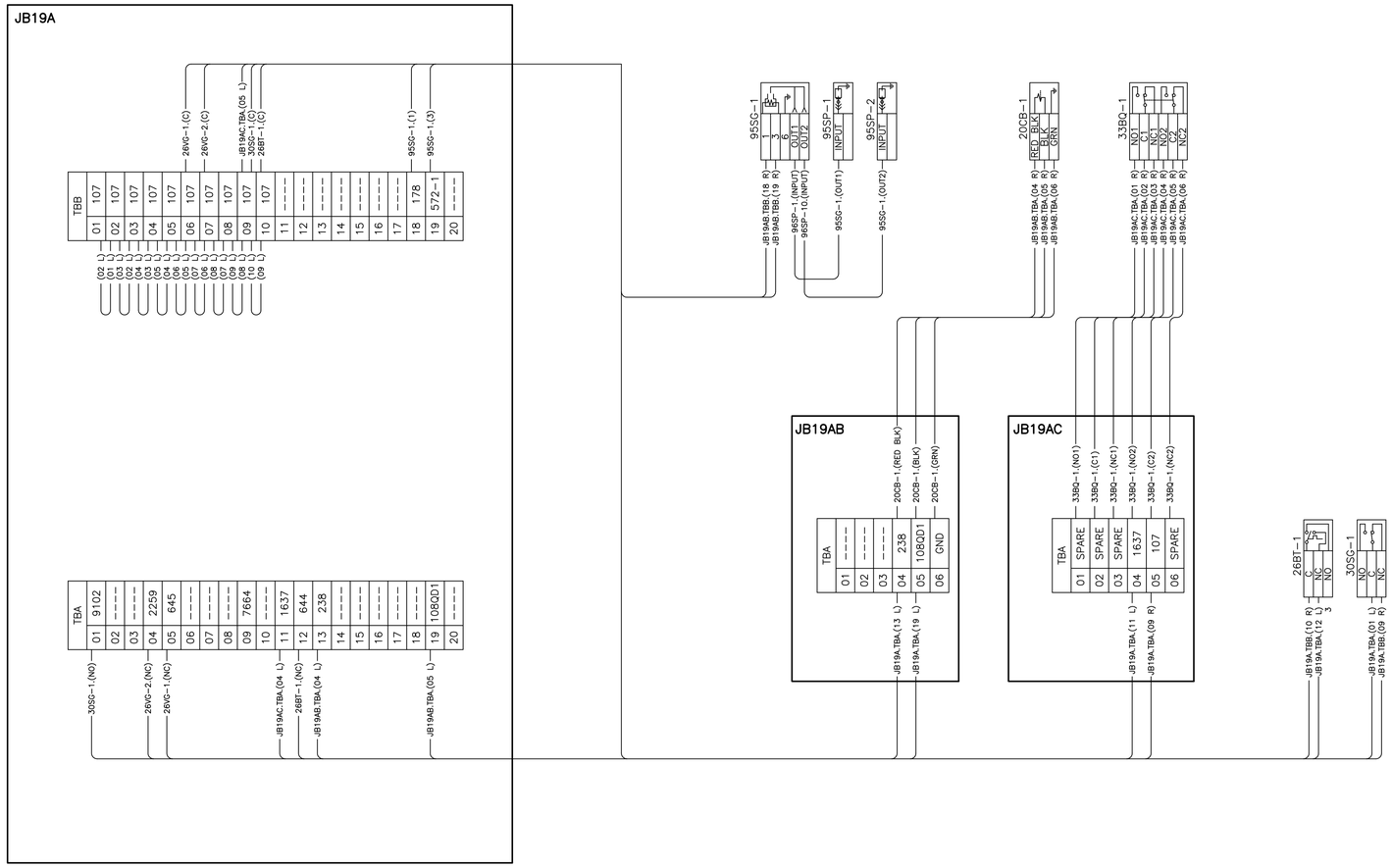

N° DE DOCUMENTO	DESCRIPCIÓN	REV.	FECHA
AGM-02-0204-PLA-I-0046	DEVICE SUMMARY		

DOCUMENTOS DE REFERENCIA

REV.	FECHA	REVISIONES O MODIFICACIONES	DIBUJO	REVISO	APROBO
0	25/07/11	ISSUED FOR CONSTRUCTION	SAB	CB	TK

REF. FABRICANTE		
REF. FABRICANTE	FABRICANTE	O/C:

DERWICK ASSOCIATES CORP. — ProEnergy SERVICES — CORPOELEC CORPORACIÓN ELÉCTRICA NACIONAL — La Electricidad de Caracas — GERENCIA FUNCIONAL DE INGENIERÍA Y PROYECTOS SENECA

AMPLIACIÓN DE LA CAPACIDAD DE GENERACIÓN Y TRANSPORTE DE ELECTRICIDAD EN LA ISLA DE MARGARITA

TURBINE CONNECTION DIAGRAM
DUAL FUEL MOD. UNITS 298034 & 298035 (MLI 0401)

PLANO N°:	REV:		
PROYECTO N°: 409-2956-1			
CALCULO:	PROYECTO:	ESCALA: NONE	PLANO No: AGM-02-0204-PLA-E-0007
REVISADO: C. Brown	CALCULO:	FECHA: 25/07/11	
DIBUJO: S. Boerckel	REVISADO: J. Castillo	DISK. N°	
APROBADO: T. Koontz	DIBUJO:	ESC./PLOTEO:	
ARCHIVO:	APROBADO: M. Monticelli	ARCHIVO:	PAGINA: 6 DE: 15 — REV. 0

F_A1_11 – 841x594mm

LINEA DE CORTE DE COPIA
LINEA DE CORTE DE ORIGINAL

LINEA DE CORTE DE ORIGINAL
LINEA DE CORTE DE COPIA

N° PLANO: AGM-02-0204-PLA-E-0007 | 0

IMPORTANTE

ESTE PLANO FUE ELABORADO EN AUTOCAD V.2008
CUALQUIER MODIFICACION REALIZADA EN CAMPO DEBERA SER NOTIFICADO A LA UNIDAD RESPONSABLE.
QUEDA PROHIBIDO CORREGIR ESTE PLANO SIN AUTORIZACION DE ESTA UNIDAD.

ALL DIMENSIONS IN BRACKETS [ ] ARE MILLIMETER; EXPRESSED DIMENSIONS ARE INCHES

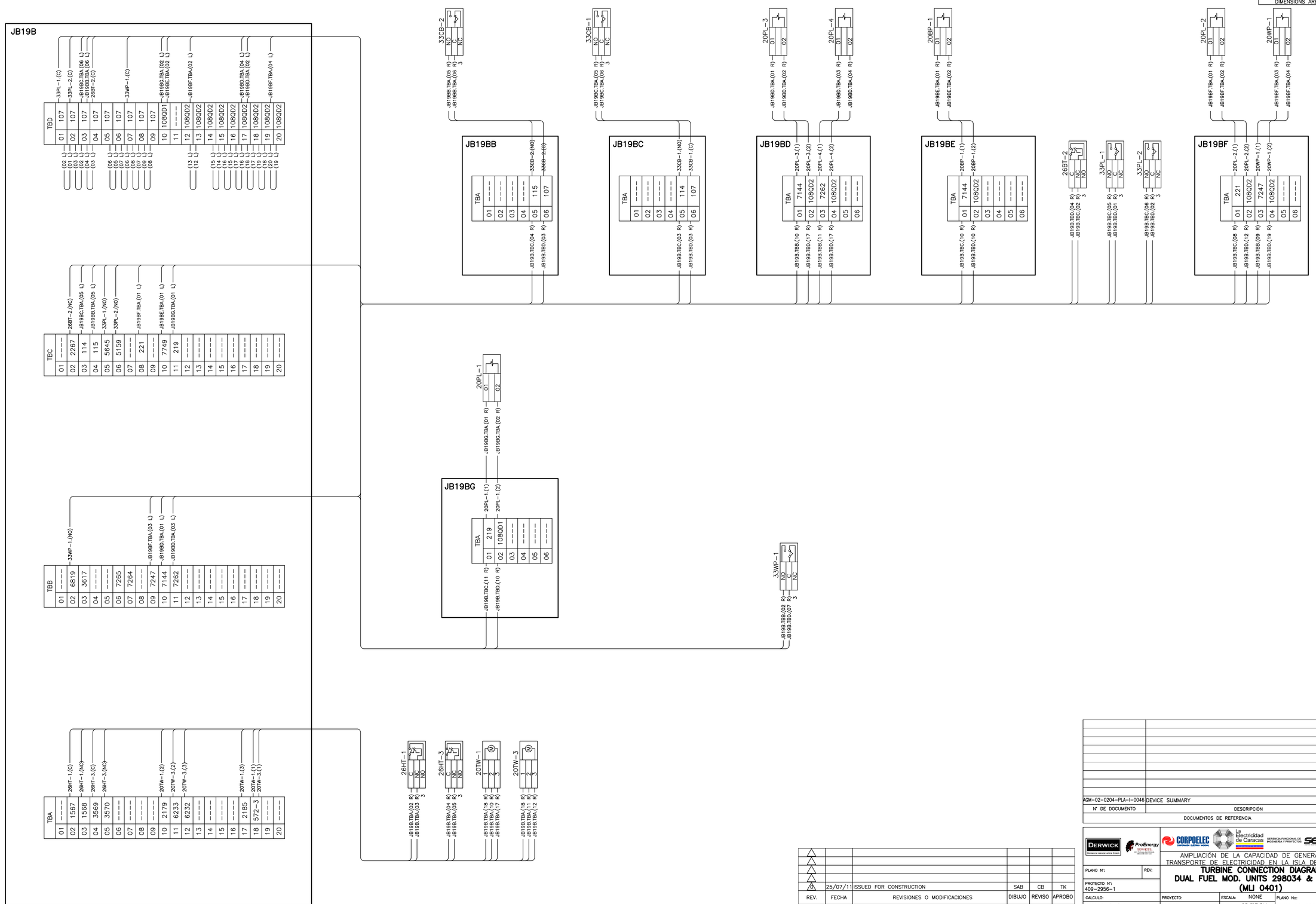

0	25/07/11	ISSUED FOR CONSTRUCTION	SAB	CB	TK
REV.	FECHA	REVISIONES O MODIFICACIONES	DIBUJO	REVISO	APROBO

REF. FABRICANTE		
REF. FABRICANTE	FABRICANTE	O/C:

N° DE DOCUMENTO	DESCRIPCIÓN	REV.	FECHA
AGM-02-0204-PLA-I-0046	DEVICE SUMMARY		

DOCUMENTOS DE REFERENCIA

DERWICK ASSOCIATES CORP. | ProEnergy SERVICES | CORPOELEC CORPORACIÓN ELÉCTRICA NACIONAL | La Electricidad de Caracas GERENCIA FUNCIONAL DE INGENIERÍA Y PROYECTOS | SENECA

AMPLIACIÓN DE LA CAPACIDAD DE GENERACIÓN Y TRANSPORTE DE ELECTRICIDAD EN LA ISLA DE MARGARITA

TURBINE CONNECTION DIAGRAM
DUAL FUEL MOD. UNITS 298034 & 298035
(MLI 0401)

PLANO N°:	REV:		
PROYECTO N°: 409-2956-1			
CALCULO:	PROYECTO:	ESCALA: NONE	PLANO No: AGM-02-0204-PLA-E-0007
REVISADO: C. Brown	CALCULO:	FECHA: 25/07/11	
DIBUJO: S. Boerckel	REVISADO: J. Castillo	DISK. N°	
APROBADO: T. Koontz	DIBUJO:	ESC./PLOTEO:	
ARCHIVO:	APROBADO: M. Monticelli	ARCHIVO:	PAGINA: 7 DE: 15 REV. 0

F_A1_11 – 841x594mm

LINEA DE CORTE DE COPIA
LINEA DE CORTE DE ORIGINAL

N° PLANO: AGM-02-0204-PLA-E-0007 | 0

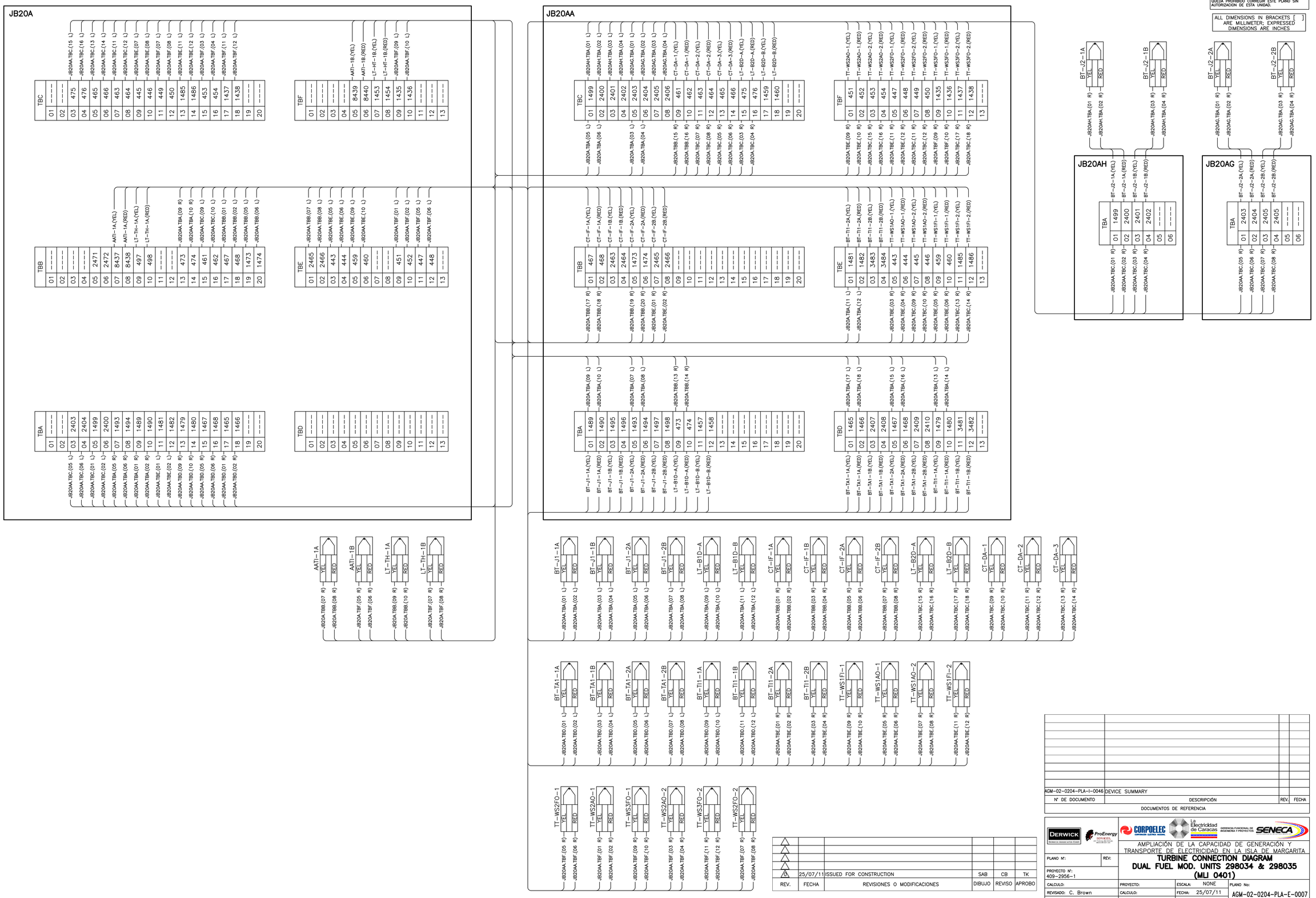

IMPORTANTE

ESTE PLANO FUE ELABORADO EN AUTOCAD V.2008
CUALQUIER MODIFICACION REALIZADA EN CAMPO DEBERA SER NOTIFICADO A LA UNIDAD RESPONSABLE.
QUEDA PROHIBIDO CORREGIR ESTE PLANO SIN AUTORIZACION DE ESTA UNIDAD.

ALL DIMENSIONS IN BRACKETS [ ] ARE MILLIMETER; EXPRESSED DIMENSIONS ARE INCHES

N° DE DOCUMENTO	DESCRIPCIÓN	REV.	FECHA
AGM-02-0204-PLA-I-0046	DEVICE SUMMARY		

DOCUMENTOS DE REFERENCIA

REV.	FECHA	REVISIONES O MODIFICACIONES	DIBUJO	REVISO	APROBO
0	25/07/11	ISSUED FOR CONSTRUCTION	SAB	CB	TK

REF. FABRICANTE	FABRICANTE	O/C:
REF. FABRICANTE		

DERWICK · ProEnergy SERVICES · CORPOELEC · La Electricidad de Caracas · SENECA

AMPLIACIÓN DE LA CAPACIDAD DE GENERACIÓN Y TRANSPORTE DE ELECTRICIDAD EN LA ISLA DE MARGARITA

TURBINE CONNECTION DIAGRAM
DUAL FUEL MOD. UNITS 298034 & 298035 (MLI 0401)

PLANO N°: | REV:
PROYECTO N°: 409-2956-1

CALCULO:	PROYECTO:	ESCALA: NONE	PLANO No: AGM-02-0204-PLA-E-0007
REVISADO: C. Brown	CALCULO:	FECHA: 25/07/11	
DIBUJO: S. Boerckel	REVISADO: J. Castillo	DISK. N°	
APROBADO: T. Koontz	DIBUJO:	ESC./PLOTEO:	
ARCHIVO:	APROBADO: M. Monticelli	ARCHIVO:	PAGINA: 8 DE: 15 REV. 0

F_A1_11 – 841x594mm

LINEA DE CORTE DE ORIGINAL
LINEA DE CORTE DE COPIA

N° PLANO: AGM-02-0204-PLA-E-0007 (0)

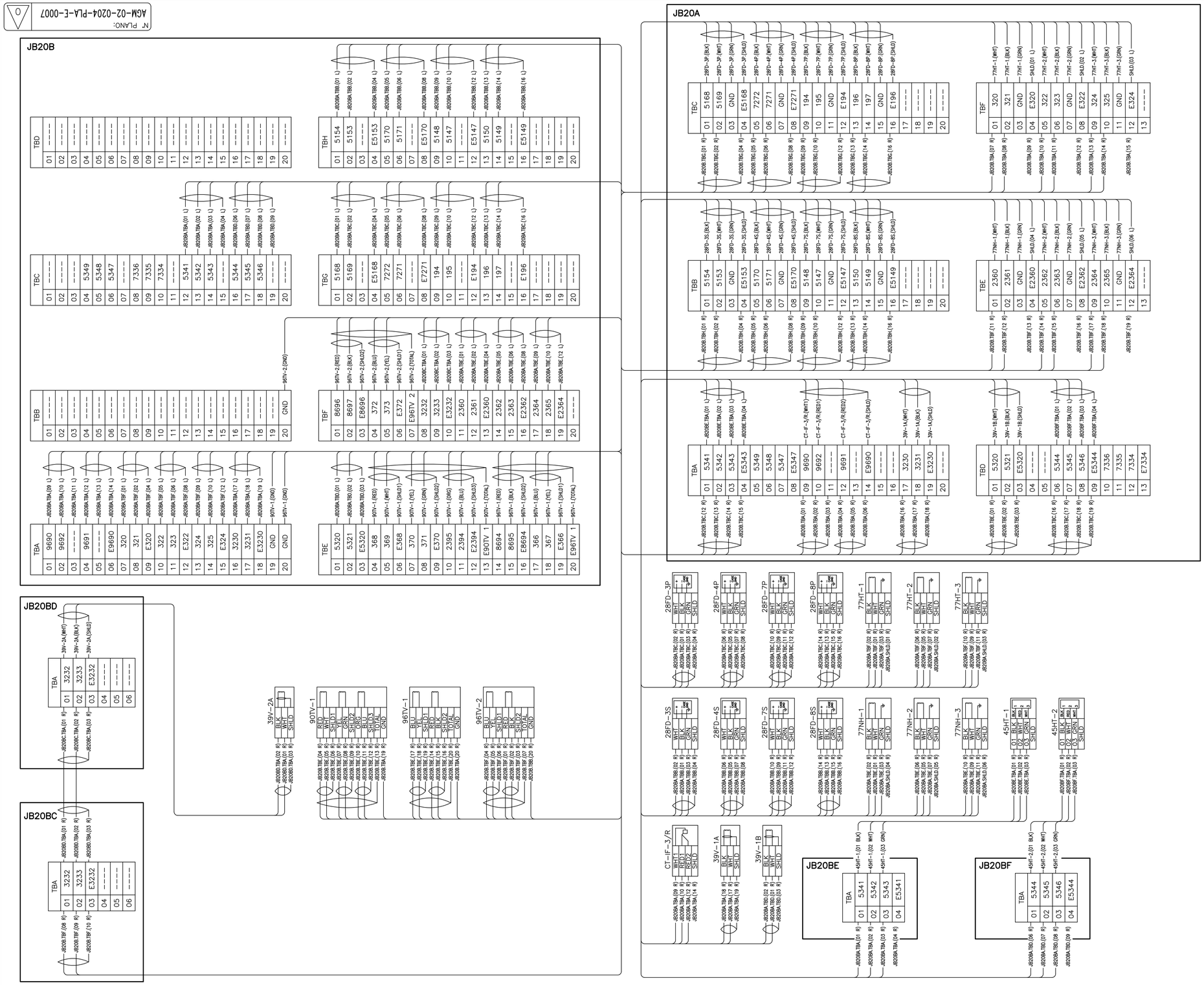

IMPORTANTE

ESTE PLANO FUE ELABORADO EN AUTOCAD V.2008
CUALQUIER MODIFICACION REALIZADA EN CAMPO
DEBERA SER NOTIFICADO A LA UNIDAD
RESPONSABLE.
QUEDA PROHIBIDO CORREGIR ESTE PLANO SIN
AUTORIZACION DE ESTA UNIDAD.

ALL DIMENSIONS IN BRACKETS [ ]
ARE MILLIMETER; EXPRESSED
DIMENSIONS ARE INCHES

N° DE DOCUMENTO	DESCRIPCIÓN	REV.	FECHA
AGM-02-0204-PLA-I-0046	DEVICE SUMMARY		

DOCUMENTOS DE REFERENCIA

REV.	FECHA	REVISIONES O MODIFICACIONES	DIBUJO	REVISO	APROBO
0	25/07/11	ISSUED FOR CONSTRUCTION	SAB	CB	TK

REF. FABRICANTE		
REF. FABRICANTE	FABRICANTE	O/C:

DERWICK — ProEnergy — CORPOELEC — La Electricidad de Caracas — SENECA

AMPLIACIÓN DE LA CAPACIDAD DE GENERACIÓN Y TRANSPORTE DE ELECTRICIDAD EN LA ISLA DE MARGARITA

TURBINE CONNECTION DIAGRAM
DUAL FUEL MOD. UNITS 298034 & 298035 (MLI 0401)

PLANO N°: | REV:
PROYECTO N°: 409-2956-1

CALCULO:	PROYECTO:	ESCALA: NONE	PLANO No:
REVISADO: C. Brown	CALCULO:	FECHA: 25/07/11	AGM-02-0204-PLA-E-0007
DIBUJO: S. Boerckel	REVISADO: J. Castillo	DISK. N°	
APROBADO: T. Koontz	DIBUJO:	ESC./PLOTEO:	
ARCHIVO:	APROBADO: M. Monticelli	ARCHIVO:	PAGINA: 9 DE: 15 REV. 0

F_A1_11 – 841x594mm

LINEA DE CORTE DE COPIA
LINEA DE CORTE DE ORIGINAL

N° PLANO: AGM-02-0204-PLA-E-0007 | 0

I M P O R T A N T E

ESTE PLANO FUE ELABORADO EN AUTOCAD V.2008
CUALQUIER MODIFICACION REALIZADA EN CAMPO
DEBERA SER NOTIFICADO A LA UNIDAD
RESPONSABLE.
QUEDA PROHIBIDO CORREGIR ESTE PLANO SIN
AUTORIZACION DE ESTA UNIDAD.

ALL DIMENSIONS IN BRACKETS [ ]
ARE MILLIMETER; EXPRESSED
DIMENSIONS ARE INCHES

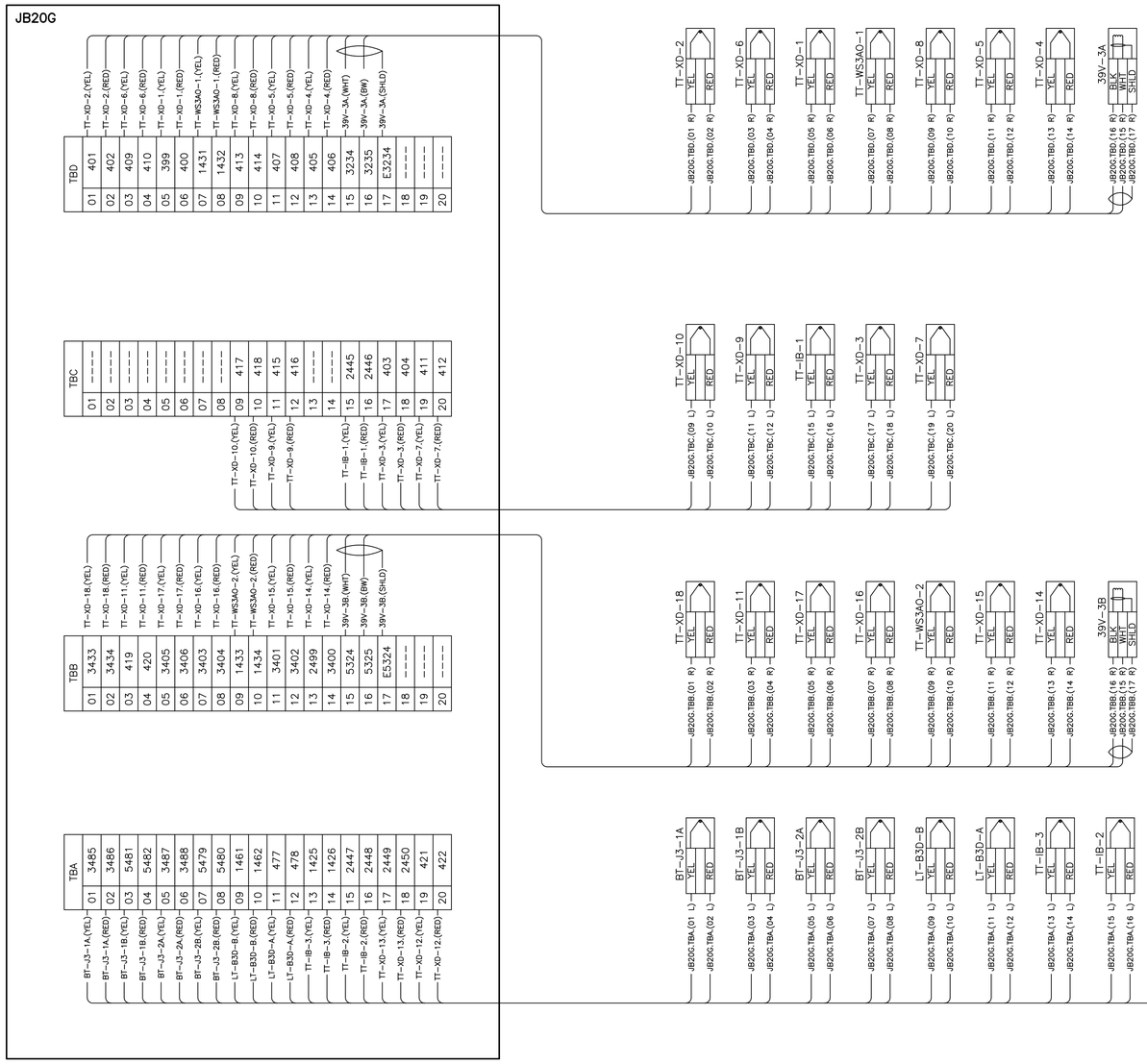

N° DE DOCUMENTO	DESCRIPCIÓN	REV.	FECHA
AGM-02-0204-PLA-I-0046	DEVICE SUMMARY		

DOCUMENTOS DE REFERENCIA

REV.	FECHA	REVISIONES O MODIFICACIONES	DIBUJO	REVISO	APROBO
0	25/07/11	ISSUED FOR CONSTRUCTION	SAB	CB	TK

REF. FABRICANTE		
REF. FABRICANTE	FABRICANTE	O/C:

DERWICK Derwick Associates Corp. · ProEnergy SERVICES · CORPOELEC Corporación Eléctrica Nacional · La Electricidad de Caracas · GERENCIA FUNCIONAL DE INGENIERIA Y PROYECTOS · SENECA

AMPLIACIÓN DE LA CAPACIDAD DE GENERACIÓN Y TRANSPORTE DE ELECTRICIDAD EN LA ISLA DE MARGARITA

TURBINE CONNECTION DIAGRAM
DUAL FUEL MOD. UNITS 298034 & 298035
(MLI 0401)

PLANO N°: | REV:
PROYECTO N°: 409-2956-1

CALCULO:	PROYECTO:	ESCALA: NONE	PLANO No: AGM-02-0204-PLA-E-0007
REVISADO: C. Brown	CALCULO:	FECHA: 25/07/11	
DIBUJO: S. Boerckel	REVISADO: J. Castillo	DISK. N°	
APROBADO: T. Koontz	DIBUJO:	ESC./PLOTEO:	REV. 0
ARCHIVO:	APROBADO: M. Monticelli	ARCHIVO:	PAGINA: 10 DE: 15

F_A1_11 – 841x594mm

LINEA DE CORTE DE ORIGINAL
LINEA DE CORTE DE COPIA

N° PLANO: AGM-02-0204-PLA-E-0007 | 0

IMPORTANTE

ESTE PLANO FUE ELABORADO EN AUTOCAD V.2008
CUALQUIER MODIFICACION REALIZADA EN CAMPO
DEBERA SER NOTIFICADO A LA UNIDAD
RESPONSABLE.
QUEDA PROHIBIDO CORREGIR ESTE PLANO SIN
AUTORIZACION DE ESTA UNIDAD.

ALL DIMENSIONS IN BRACKETS [ ]
ARE MILLIMETER; EXPRESSED
DIMENSIONS ARE INCHES

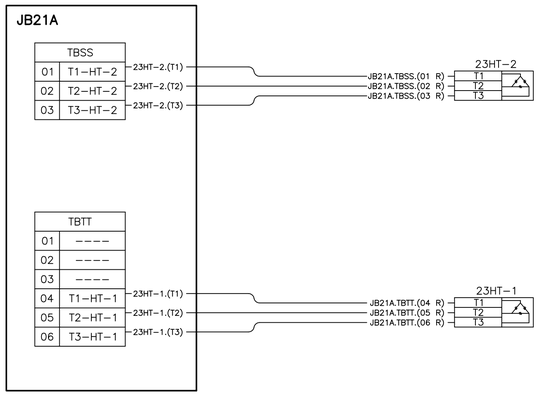

N° DE DOCUMENTO	DESCRIPCIÓN	REV.	FECHA
AGM-02-0204-PLA-I-0046	DEVICE SUMMARY		

DOCUMENTOS DE REFERENCIA

REV.	FECHA	REVISIONES O MODIFICACIONES	DIBUJO	REVISO	APROBO
0	25/07/11	ISSUED FOR CONSTRUCTION	SAB	CB	TK

REF. FABRICANTE		
REF. FABRICANTE	FABRICANTE	O/C:

DERWICK Engineering Associates Corp. — ProEnergy Services — CORPOELEC Corporación Eléctrica Nacional — La Electricidad de Caracas — Gerencia Funcional de Ingeniería y Proyectos — SENECA

AMPLIACIÓN DE LA CAPACIDAD DE GENERACIÓN Y TRANSPORTE DE ELECTRICIDAD EN LA ISLA DE MARGARITA

TURBINE CONNECTION DIAGRAM
DUAL FUEL MOD. UNITS 298034 & 298035
(MLI 0401)

PLANO N°:	REV:		
PROYECTO N°: 409-2956-1			
CALCULO:	PROYECTO:	ESCALA: NONE	PLANO No: AGM-02-0204-PLA-E-0007
REVISADO: C. Brown	CALCULO:	FECHA: 25/07/11	
DIBUJO: S. Boerckel	REVISADO: J. Castillo	DISK. N°	
APROBADO: T. Koontz	DIBUJO:	ESC./PLOTEO:	
ARCHIVO:	APROBADO: M. Monticelli	ARCHIVO:	PAGINA: 11 DE: 15 — REV. 0

F_A1_11 – 841x594mm

LINEA DE CORTE DE COPIA
LINEA DE CORTE DE ORIGINAL

LINEA DE CORTE DE ORIGINAL
LINEA DE CORTE DE COPIA

0	N° PLANO: AGM-02-0204-PLA-E-0007

IMPORTANTE

ESTE PLANO FUE ELABORADO EN AUTOCAD V.2008
CUALQUIER MODIFICACION REALIZADA EN CAMPO
DEBERA SER NOTIFICADO A LA UNIDAD
RESPONSABLE.
QUEDA PROHIBIDO CORREGIR ESTE PLANO SIN
AUTORIZACION DE ESTA UNIDAD.

ALL DIMENSIONS IN BRACKETS [ ]
ARE MILLIMETER; EXPRESSED
DIMENSIONS ARE INCHES

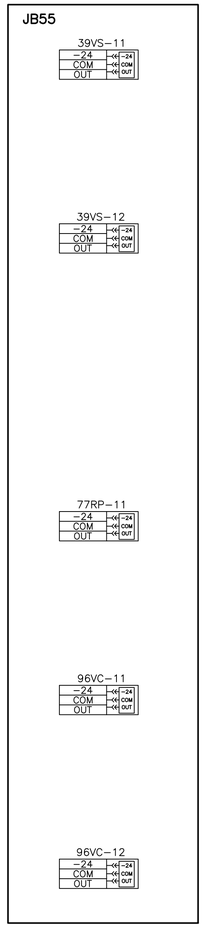

N° DE DOCUMENTO	DESCRIPCIÓN	REV.	FECHA
ACM-02-0204-PLA-I-0046	DEVICE SUMMARY		

DOCUMENTOS DE REFERENCIA

REV.	FECHA	REVISIONES O MODIFICACIONES	DIBUJO	REVISO	APROBO
0	25/07/11	ISSUED FOR CONSTRUCTION	SAB	CB	TK

REF. FABRICANTE		
REF. FABRICANTE	FABRICANTE	O/C:

DERWICK ASSOCIATES CORP. — ProEnergy SERVICES — CORPOELEC CORPORACIÓN ELÉCTRICA NACIONAL — La Electricidad de Caracas — GERENCIA FUNCIONAL DE INGENIERÍA Y PROYECTOS — SENECA

AMPLIACIÓN DE LA CAPACIDAD DE GENERACIÓN Y TRANSPORTE DE ELECTRICIDAD EN LA ISLA DE MARGARITA

TURBINE CONNECTION DIAGRAM
DUAL FUEL MOD. UNITS 298034 & 298035
(MLI 0401)

PLANO N°:	REV:		
PROYECTO N°: 409-2956-1			
CALCULO:	PROYECTO:	ESCALA: NONE	PLANO No: AGM-02-0204-PLA-E-0007
REVISADO: C. Brown	CALCULO:	FECHA: 25/07/11	
DIBUJO: S. Boerckel	REVISADO: J. Castillo	DISK. N°	
APROBADO: T. Koontz	DIBUJO:	ESC./PLOTEO:	
ARCHIVO:	APROBADO: M. Monticelli	ARCHIVO:	PAGINA: 12 DE: 15 — REV. 0

F_A1_11 – 841x594mm

LINEA DE CORTE DE COPIA
LINEA DE CORTE DE ORIGINAL

LINEA DE CORTE DE ORIGINAL
LINEA DE CORTE DE COPIA

N° PLANO: AGM-02-0204-PLA-E-0007 | 0

IMPORTANTE

ESTE PLANO FUE ELABORADO EN AUTOCAD V.2008
CUALQUIER MODIFICACION REALIZADA EN CAMPO
DEBERA SER NOTIFICADO A LA UNIDAD
RESPONSABLE.
QUEDA PROHIBIDO CORREGIR ESTE PLANO SIN
AUTORIZACION DE ESTA UNIDAD.

ALL DIMENSIONS IN BRACKETS [ ]
ARE MILLIMETER; EXPRESSED
DIMENSIONS ARE INCHES

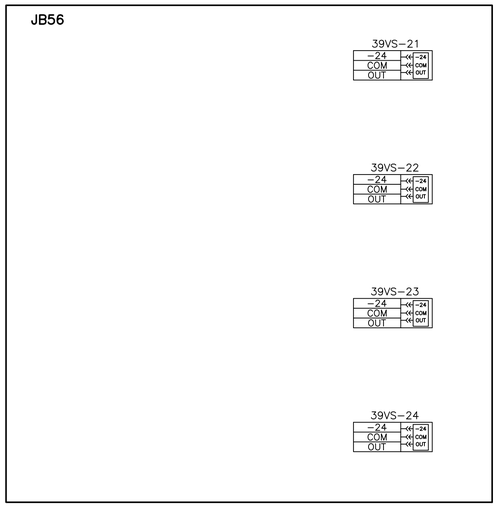

REV.	FECHA	REVISIONES O MODIFICACIONES	DIBUJO	REVISO	APROBO
0	25/07/11	ISSUED FOR CONSTRUCTION	SAB	CB	TK

REF. FABRICANTE		
REF. FABRICANTE	FABRICANTE	O/C:

N° DE DOCUMENTO	DESCRIPCIÓN	REV.	FECHA
AGM-02-0204-PLA-I-0046	DEVICE SUMMARY		

DOCUMENTOS DE REFERENCIA

DERWICK ASSOCIATES CORP. | ProEnergy SERVICES | CORPOELEC | La Electricidad de Caracas | GERENCIA FUNCIONAL DE INGENIERIA Y PROYECTOS | SENECA

AMPLIACIÓN DE LA CAPACIDAD DE GENERACIÓN Y TRANSPORTE DE ELECTRICIDAD EN LA ISLA DE MARGARITA

TURBINE CONNECTION DIAGRAM
DUAL FUEL MOD. UNITS 298034 & 298035
(MLI 0401)

PLANO N°:	REV:		
PROYECTO N°: 409-2956-1			
CALCULO:	PROYECTO:	ESCALA: NONE	PLANO No:
REVISADO: C. Brown	CALCULO:	FECHA: 25/07/11	AGM-02-0204-PLA-E-0007
DIBUJO: S. Boerckel	REVISADO: J. Castillo	DISK. N°	
APROBADO: T. Koontz	DIBUJO:	ESC./PLOTEO:	
ARCHIVO:	APROBADO: M. Monticelli	ARCHIVO:	PAGINA: 13 DE: 15 — REV. 0

F_A1_11 – 841x594mm

LINEA DE CORTE DE COPIA
LINEA DE CORTE DE ORIGINAL

LINEA DE CORTE DE ORIGINAL
LINEA DE CORTE DE COPIA

0	N° PLANO: AGM-02-0204-PLA-E-0007

IMPORTANTE

ESTE PLANO FUE ELABORADO EN AUTOCAD V.2008
CUALQUIER MODIFICACION REALIZADA EN CAMPO
DEBERA SER NOTIFICADO A LA UNIDAD
RESPONSABLE.
QUEDA PROHIBIDO CORREGIR ESTE PLANO SIN
AUTORIZACION DE ESTA UNIDAD.

ALL DIMENSIONS IN BRACKETS [ ]
ARE MILLIMETER; EXPRESSED
DIMENSIONS ARE INCHES

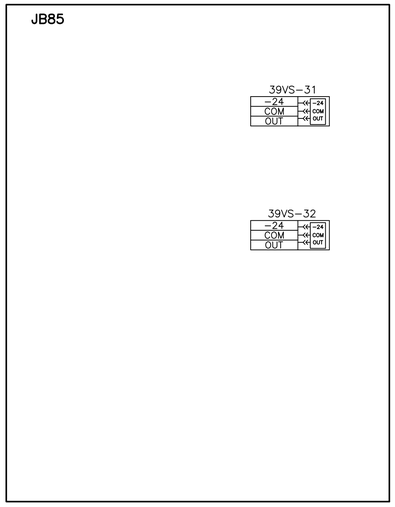

0	25/07/11	ISSUED FOR CONSTRUCTION	SAB	CB	TK
REV.	FECHA	REVISIONES O MODIFICACIONES	DIBUJO	REVISO	APROBO

REF. FABRICANTE		
REF. FABRICANTE	FABRICANTE	O/C:

ACM-02-0204-PLA-I-0046	DEVICE SUMMARY		
N° DE DOCUMENTO	DESCRIPCIÓN	REV.	FECHA

DOCUMENTOS DE REFERENCIA

DERWICK ASSOCIATES CORP. — ProEnergy SERVICES — CORPOELEC CORPORACIÓN ELÉCTRICA NACIONAL — La Electricidad de Caracas — GERENCIA FUNCIONAL DE INGENIERÍA Y PROYECTOS — SENECA

AMPLIACIÓN DE LA CAPACIDAD DE GENERACIÓN Y TRANSPORTE DE ELECTRICIDAD EN LA ISLA DE MARGARITA

TURBINE CONNECTION DIAGRAM DUAL FUEL MOD. UNITS 298034 & 298035 (MLI 0401)

PLANO N°:	REV:		
PROYECTO N°: 409-2956-1			
CALCULO:	PROYECTO:	ESCALA: NONE	PLANO No: AGM-02-0204-PLA-E-0007
REVISADO: C. Brown	CALCULO:	FECHA: 25/07/11	
DIBUJO: S. Boerckel	REVISADO: J. Castillo	DISK. N°	
APROBADO: T. Koontz	DIBUJO:	ESC./PLOTEO:	
ARCHIVO:	APROBADO: M. Monticelli	ARCHIVO:	PAGINA: 14 DE: 15 — REV. 0

F_A1_11 – 841x594mm

LINEA DE CORTE DE COPIA
LINEA DE CORTE DE ORIGINAL

LINEA DE CORTE DE ORIGINAL
LINEA DE CORTE DE COPIA

N°: PLANO: AGM-02-0204-PLA-E-0007 | 0

DEVICE	DL	BOX	WIRE PART #	GAUGE	DEVICE HARDWARE #	END HARDWARE #
20AA-1	X	JB2	362A2369P001	14AWG		277A2563P005
20AB-1	X	JB2	362A2369P001	14AWG		277A2563P005
20BP-1	X	JB19B	362A2370P015	14AWG		277A2563P005
20CB-1	X	JB19A	362A2370P015	14AWG		277A2563P005
20CF-1	X	JB2	362A2369P001	14AWG		277A2563P005
20FK-1		JB2	362A2369P002	14AWG		277A2563P005
20FL-1	X	JB2	362A2369P001	14AWG		
20HR-1		JB2	362A2369P001	14AWG		277A2563P005
20PL-1	X	JB19B	362A2370P015	14AWG		277A2563P005
20PL-2	X	JB19B	362A2370P015	14AWG		277A2563P005
20PL-3	X	JB19B	362A2370P015	14AWG		277A2563P005
20PL-4	X	JB19B	362A2370P015	12AWG		277A2563P006
20PW-1	X	JB19B	362A2370P015	14AWG		277A2563P005
20TU-1		JB2	362A2369P001	14AWG		277A2563P005
20TV-1	X	JB2	362A2369P001	14AWG		
20TW-1		JB19B	362A2370P015	14AWG		277A2563P005
20TW-3		JB19B	362A2370P015	14AWG		277A2563P005
23AB-1		JB2	362A2369P002	12AWG	247B7312G001	277A2563P005
23CR-1		JB2	362A2369P002	12AWG	247B7312G001	277A2563P005
23HA-1		JB4	362A2369P006	4AWG	274B7312G004	
23HA-2		JB4	362A2369P006	4AWG	247B7312G004	
23HA-3		JB4	362A2369P003	10AWG	247B7312G001	
23HQ-1		JB2	362A2369P002	12AWG	247B7312G001	277A2563P005
23HT-1		JB21A	362A2370P013	10AWG	247B7312G001	
23HT-2		JB21A	362A2370P013	10AWG	247B7312G001	
23HT-3		JB4	362A2370P014	12AWG	247B7312G001	
23QA-1		JB2	362A2369P002	12AWG	247B7312G001	277A2563P005
23QT-1		JB4	362A2369P004	8AWG	329A3343P012	
23QT-2		JB4	362A2369P004	8AWG	329A3343P012	
26BT-1		JB19A	362A2370P015	14AWG		277A2563P005
26BT-2		JB19B	362A2370P015	14AWG		277A2563P005
26HA-1		JB2	362A2369P001	14AWG		277A2563P005
26HA-3		JB2	362A2369P001	14AWG		277A2563P005
26HT-1		JB19B	362A2370P015	14AWG		277A2563P005
26HT-3		JB19B	362A2370P015	14AWG		277A2563P005
26QA-1		JB2	362A2369P001	14AWG		277A2563P005
26QL-1		JB2	362A2369P001	14AWG		277A2563P005
26QN-1		JB2	362A2369P001	14AWG		277A2563P005
26QT-1A		JB2	362A2369P001	14AWG		277A2563P005
26QT-1B		JB2	362A2369P001	14AWG		277A2563P005
28FD-3P	X	JB20B	362A2372P001	18AWG		277A2563P002
28FD-3S	X	JB20B	362A2372P001	18AWG		277A2563P002
28FD-4P	X	JB20B	362A2372P001	18AWG		277A2563P002
28FD-4S	X	JB20B	362A2372P001	18AWG		277A2563P002
28FD-7P	X	JB20B	362A2372P001	18AWG		277A2563P002
28FD-7S	X	JB20B	362A2372P001	18AWG		277A2563P002
28FD-8P	X	JB20B	362A2372P001	18AWG		277A2563P002
28FD-8S	X	JB20B	362A2372P001	18AWG		277A2563P002
30SG-1		JB19A	362A2370P015	14AWG	277A2563P005	277A2563P005
33BQ-1	X	JB19A	362A2370P015	14AWG		277A2563P005
33CB-1	X	JB19B	362A2370P015	14AWG		277A2563P005
33CB-2	X	JB19B	362A2370P015	14AWG		277A2563P005
33FK-1		JB2	362A2369P002	14AWG		277A2563P005
33FK-2	X	JB2	362A2369P002	14AWG		
33FL-1	X	JB2	362A2369P001	14AWG		277A2563P005
33FL-2	X	JB2	362A2369P001	14AWG		
33PL-1		JB19B	362A2370P015	14AWG	277A2563P005	277A2563P005
33PL-2		JB19B	362A2370P015	14AWG	277A2563P005	277A2563P005
33TM-1		JB2	362A2369P001	14AWG		277A2563P005
33TM-2		JB2	362A2369P001	14AWG		277A2563P005
33TM-4		JB2	362A2369P001	14AWG		277A2563P005
33TM-5		JB2	362A2369P001	14AWG		277A2563P005
33TM-7		JB2	362A2369P001	14AWG		277A2563P005
33TM-8		JB2	362A2369P001	14AWG		277A2563P005
33WP-1		JB19B	362A2370P015	14AWG		277A2563P005
39V-1A	X	JB20B	362A2372P001	18AWG		277A2563P002
39V-1B	X	JB20B	362A2372P001	18AWG		
39V-2A	X	JB20B	362A2372P001	18AWG		277A2563P002
39V-3A	X	JB20G		18AWG		277A2563P002
39V-3B	X	JB20G		18AWG		277A2563P002
39VS-11		JB55				
39VS-12		JB55				
39VS-21		JB56				
39VS-22		JB56				
39VS-23		JB56				
39VS-24		JB56				
39VS-31		JB85				
39VS-32		JB85				
43HR-1		JB2	362A2369P002	12AWG	277A2981P001	277A2563P005
45FA-1A		JB77A	362A2370P016	16AWG	357A1760P001	329A3343P004
45FA-1B		JB77A	362A2370P016	16AWG	357A1760P001	329A3343P004
45FA-2A		JB77A	362A2370P016	16AWG	357A1760P001	329A3343P004
45FA-2B		JB77A	362A2370P016	16AWG	357A1760P001	329A3343P004
45FA-5A		JB77A	362A2370P016	16AWG	357A1760P001	329A3343P004
45FA-5B		JB77A	362A2370P016	16AWG	357A1760P001	329A3343P004
45FLC-20A		JB77A	357A1591P001	16AWG	357A1760P010	329A3343P004
45FLC-20B		JB77A	357A1591P001	16AWG	357A1760P010	329A3343P004
45FLC-21A		JB77A	357A1591P001	16AWG	357A1760P010	329A3343P004
45FLC-21B		JB77A	357A1591P001	16AWG	357A1760P010	329A3343P004
45FT-1A		JB77A	362A2371P001	18AWG		329A3343P001
45FT-1B		JB77A	362A2371P001	18AWG		329A3343P001
45FT-2A		JB77A	362A2371P001	18AWG		329A3343P001
45FT-2B		JB77A	362A2371P001	18AWG		329A3343P001
45FT-3A		JB77A	362A2371P001	18AWG		329A3343P001
45FT-3B		JB77A	362A2371P001	18AWG		329A3343P001
45HT-1		JB20B	362A2374P001	18AWG	277A2563P002	277A2563P002
45HT-2		JB20B	362A2374P001	18AWG		277A2563P002
63AD-1A		JB2	362A2369P001	14AWG		277A2563P005
63AD-1B		JB2	362A2369P001	14AWG		277A2563P005
63AD-1C		JB2	362A2369P001	14AWG		277A2563P005
63AF-1		JB2	362A2369P001	14AWG		277A2563P005
63FL-2		JB2	362A2369P001	14AWG		277A2563P005
63HF-1		JB2	362A2369P001	14AWG		277A2563P005
63HL-1		JB2	362A2369P001	14AWG		277A2563P005
63HL-2		JB2	362A2369P001	14AWG		277A2563P005
63HL-3		JB2	362A2369P001	14AWG		277A2563P005
63HQ-1		JB2	362A2369P001	14AWG		277A2563P005
63HR-1		JB2	362A2369P011	14AWG	277A2563P006	277A2563P005
63HR-2		JB2	362A2369P001	14AWG	277A2563P006	277A2563P005
63LF-1		JB2	362A2369P001	14AWG		277A2563P005
63LF-8		JB2	362A2369P001	14AWG		277A2563P005
63LF-9		JB2	362A2369P001	14AWG		277A2563P005
63QA-1		JB2	362A2369P001	14AWG		277A2563P005
63QQ-1		JB2	362A2369P001	14AWG		277A2563P005
65FP-1		JB1	362A2369P001	18AWG		277A2563P002
71QH-1		JB2	362A2369P001	14AWG	277A2563P005	277A2563P005
71QL-1		JB2	362A2374P001	14AWG	277A2563P005	277A2563P005
77FD-1		JB1	362A2369P001	18AWG		277A2563P002
77FD-2		JB1	362A2369P001	18AWG		277A2563P002
77FD-3	X	JB1	362A2372P001	18AWG		277A2563P002
77HT-1	X	JB20B	362A2372P001	18AWG		277A2563P002

DEVICE	DL	BOX	WIRE PART #	GAUGE	DEVICE HARDWARE #	END HARDWARE #
77HT-2	X	JB20B	362A2372P001	18AWG		277A2563P002
77HT-3	X	JB20B	362A2372P001	18AWG		277A2563P002
77NH-1	X	JB20B	362A2372P001	18AWG		277A2563P002
77NH-2	X	JB20B	362A2372P001	18AWG		277A2563P002
77NH-3	X	JB20B	362A2372P001	18AWG		277A2563P002
77RP-11		JB55				
88AB-1		JB4	362A2369P006	4AWG	247B7312G004	
88HQ-1		JB4	362A2369P004	8AWG	247B7312G002	
88QA-1		JB4		20AWG		
88QE-1		JB4	362A2369P007	2AWG		247B7312G005
88TM-1		JB4	362A2369P002	12AWG	247B7312G001	
90TV-1	X	JB20B		18AWG		277A2563P002
95SG-1		JB19A	362A2370P015	12AWG	277A2563P005	
95SP-1		JB19A	2302	12AWG		
95SP-10		JB19A	2302	12AWG		
96TV-1	X	JB20B		18AWG		277A2563P002
96TV-2	X	JB20B		18AWG		277A2563P002
96VC-11		JB55				
96VC-12		JB55				
AATI-1A		JB20A	362A2421P001	18AWG		
AATI-1B		JB20A	362A2421P001	18AWG		
AL-01A		JB2	362A2369P002	12AWG	247B7312G001	277A2563P005
AL-01B		JB2	362A2369P002	12AWG	247B7312G001	277A2563P005
AL-02E		JB2	362A2369P002	12AWG	247B7312G001	
AL-03E		JB2	362A2369P002	12AWG	247B7312G001	277A2563P005
AL-04A		JB2	362A2369P002	12AWG		
AL-04B		JB2	362A2370P014	12AWG		
AL-05A		JB2	362A2370P014	12AWG		
AL-05B		JB2	362A2370P014	12AWG		
AL-06A		JB2	362A2370P014	12AWG		
AL-06B		JB2	362A2370P014	12AWG		
AL-07A		JB2	362A2370P014	12AWG		
AL-07B		JB2	362A2370P014	12AWG		
AL-08A		JB2	362A2370P014	12AWG		
AL-08B		JB2	362A2370P014	12AWG		
BT-J1-1A	X	JB20A	362A2421P001	18AWG		
BT-J1-1B	X	JB20A		18AWG		
BT-J1-2A	X	JB20A	362A2421P001	18AWG		
BT-J1-2B	X	JB20A		18AWG		
BT-J2-1A	X	JB20A	362A2421P001	18AWG		
BT-J2-1B	X	JB20A	362A2421P001	18AWG		
BT-J2-2A	X	JB20A	362A2421P001	18AWG		
BT-J2-2B	X	JB20A	362A2421P001	18AWG		
BT-J3-1A	X	JB20G		18AWG		
BT-J3-1B	X	JB20G		18AWG		
BT-J3-2A	X	JB20G		18AWG		
BT-J3-2B	X	JB20G		18AWG		
BT-TA1-1A	X	JB20A	362A2421P001	18AWG		
BT-TA1-1B	X	JB20A		18AWG		
BT-TA1-2A	X	JB20A	362A2421P001	18AWG		
BT-TA1-2B	X	JB20A		18AWG		
BT-TI1-1A	X	JB20A	362A221P001	18AWG		
BT-TI1-1B	X	JB20A		18AWG		
BT-TI1-2A	X	JB20A	362A2421P001	18AWG		
BT-TI1-2B	X	JB20A		18AWG		
CT-DA-1	X	JB20A	362A2421P001	18AWG		
CT-DA-2	X	JB20A	362A2421P001	18AWG		
CT-DA-3	X	JB20A	362A2421P001	18AWG		
CT-IF-1A		JB20A	362A2421P001	18AWG		
CT-IF-1B		JB20A	362A2421P001	18AWG		
CT-IF-2A		JB20A	362A2421P001	18AWG		
CT-IF-2B		JB20A	362A2421P001	18AWG		
CT-IF-3/R		JB20B	362A2374P001	18AWG	277A2563P002	277A2563P002
DL-03A		JB2	362A2370P014	12AWG	247B7312G001	277A2563P005
DL-03B		JB2	362A2370P014	12AWG	247B7312G001	277A2563P005
ET-CR5-1/R		JB1	362A2374P001	18AWG	277A2563P004	277A2563P002
ET-CR5-2/R		JB1	362A2374P001	18AWG	277A2563P004	277A2563P002
ET-CR5-3/R		JB1	362A2374P001	18AWG	277A2563P004	277A2563P002
LT-B1D-A		JB20A	362A2421P001	18AWG		
LT-B1D-B		JB20A	362A2421P001	18AWG		
LT-B2D-A		JB20A	362A2421P001	18AWG		
LT-B2D-B		JB20A	362A2421P001	18AWG		
LT-B3D-A		JB20G	362A2421P001	18AWG		
LT-B3D-B		JB20G	362A2421P001	18AWG		
LT-TH-1A		JB20A	362A2421P001	18AWG		
LT-TH-1B		JB20A	362A2421P001	18AWG		
SLA-1A		JB77A	362A2370P016	16AWG	357A1760P001	329A3343P004
SLA-1B		JB77A	362A2370P016	16AWG	357A1760P001	329A3343P004
SLA-1C		JB77A	362A2370P016	16AWG	357A1760P001	329A3343P004
SLA-1D		JB77A	362A2370P016	16AWG	357A1760P001	329A3343P004
SLLC-2A		JB77A	362A2370P016	16AWG	357A1760P001	329A3343P004
SLLC-2B		JB77A	362A2370P016	16AWG	357A1760P001	329A3343P004
SLT-1A		JB77A	362A2370P016	16AWG	357A1760P001	329A3343P004
SLT-1B		JB77A	362A2370P016	16AWG	357A1760P001	329A3343P004
TT-IB-1	X	JB20G		18AWG		
TT-IB-2	X	JB20G		18AWG		
TT-IB-3	X	JB20G		18AWG		
TT-WS1AO-1	X	JB20A	362A2421P001	18AWG		
TT-WS1AO-2	X	JB20A	362A2421P001	18AWG		
TT-WS1FI-1	X	JB20A	362A2421P001	18AWG		
TT-WS1FI-2	X	JB20A	362A2421P001	18AWG		
TT-WS2AO-1	X	JB20A	362A2421P001	18AWG		
TT-WS2AO-2	X	JB20A	362A2421P001	18AWG		
TT-WS2FO-1	X	JB20A	362A2421P001	18AWG		
TT-WS2FO-2	X	JB20A	362A2421P001	18AWG		
TT-WS3AO-1	X	JB20G		18AWG		
TT-WS3AO-2	X	JB20G		18AWG		
TT-WS3FO-1	X	JB20A	362A2421P001	18AWG		
TT-WS3FO-2	X	JB20A	362A2421P001	18AWG		
TT-XD-1	X	JB20G		18AWG		
TT-XD-10	X	JB20G		18AWG		
TT-XD-11	X	JB20G		18AWG		
TT-XD-12	X	JB20G		18AWG		
TT-XD-13	X	JB20G		18AWG		
TT-XD-14	X	JB20G		18AWG		
TT-XD-15	X	JB20G		18AWG		
TT-XD-16	X	JB20G		18AWG		
TT-XD-17	X	JB20G		18AWG		
TT-XD-18	X	JB20G		18AWG		
TT-XD-2	X	JB20G		18AWG		
TT-XD-3	X	JB20G		18AWG		
TT-XD-4	X	JB20G		18AWG		
TT-XD-5	X	JB20G		18AWG		
TT-XD-6	X	JB20G		18AWG		
TT-XD-7	X	JB20G		18AWG		
TT-XD-8	X	JB20G		18AWG		
TT-XD-9	X	JB20G		18AWG		

I M P O R T A N T E

ESTE PLANO FUE ELABORADO EN AUTOCAD V.2008
CUALQUIER MODIFICACION REALIZADA EN CAMPO
DEBERA SER NOTIFICADO A LA UNIDAD
RESPONSABLE.
QUEDA PROHIBIDO CORREGIR ESTE PLANO SIN
AUTORIZACION DE ESTA UNIDAD.

ALL DIMENSIONS IN BRACKETS [ ]
ARE MILLIMETER; EXPRESSED
DIMENSIONS ARE INCHES

REV.	FECHA	REVISIONES O MODIFICACIONES	DIBUJO	REVISO	APROBO
0	25/07/11	ISSUED FOR CONSTRUCTION	SAB	CB	TK

REF. FABRICANTE		
REF. FABRICANTE	FABRICANTE	O/C:

N° DE DOCUMENTO	DESCRIPCIÓN	REV.	FECHA
AGM-02-0204-PLA-I-0046	DEVICE SUMMARY		

DOCUMENTOS DE REFERENCIA

DERWICK Venezuela Associates Corp. | ProEnergy SERVICES | CORPOELEC CORPORACIÓN ELÉCTRICA NACIONAL | La Electricidad de Caracas | GERENCIA FUNCIONAL DE INGENIERÍA Y PROYECTOS | SENECA

AMPLIACIÓN DE LA CAPACIDAD DE GENERACIÓN Y TRANSPORTE DE ELECTRICIDAD EN LA ISLA DE MARGARITA

TURBINE CONNECTION DIAGRAM
DUAL FUEL MOD. UNITS 298034 & 298035
(MLI 0401)

PLANO N°: | REV:
PROYECTO N°: 409-2956-1

CALCULO:	PROYECTO:	ESCALA: NONE	PLANO No: AGM-02-0204-PLA-E-0007
REVISADO: C. Brown	CALCULO:	FECHA: 25/07/11	
DIBUJO: S. Boerckel	REVISADO: J. Castillo	DISK. N°	
APROBADO: T. Koontz	DIBUJO:	ESC./PLOTEO:	
ARCHIVO:	APROBADO: M. Monticelli	ARCHIVO:	PAGINA: 15 DE: 15 — REV. 0

F_A1_11 – 841x594mm

LINEA DE CORTE DE COPIA
LINEA DE CORTE DE ORIGINAL

N° PLANO: AGM-02-0204-PLA-E-0008 A

RELAY & DEVICE NOMENCLATURE

(SEE GCP ELEMENTARY FOR ADDITIONAL DETAILS)

27( )	UNDERVOLTAGE RELAY
27BS-1,2	SYNCH UNDERVOLTAGE RELAY (HGA11J)
50RE	INSTANTANEOUS OVERCURRENT RELAY (MDPA730000BA)
50/62BF	BREAKER FAILURE RELAY (SBC223B1A)
50/51AT-4	AUX TRANSORMER PHASE FAULT RELAY (MPD200)
51TN-2	AUX TRANSFORMER GROUIND FAULT RELAY (PART OF 50/51AT-4)
52G	GENERATOR BREAKER
59BN	BUS GROUND DETECTOR RELAY (1FV51DD2A)
59CM	STARTING (CRANKING) MOTOR GROUND RELAY (1FV51KD_A)
86AT	AUX POWER TRANSFORMER DIFF LOCKOUT RELAY (ELECTROSWITCH)
86BF	BREAKER FAILURE LOCKOUT RELAY (ELECTROSWITCH)
86G1	GENERATOR LOCKOUT RELAY (ELECTROSWITCH)
86G2	GENERATOR LOCKOUT RELAY (ELECTROSWITCH)
86RE	INADVERTANT ENERGIZATION LOCKOUT RELAY (ELECTROSWITCH)
86T	TRANSFORMER DIFF LOCKOUT RELAY (ELECTROSWITCH)
86U	UNIT DIFF LOCKOUT RELAY (ELECTROSWITCH)
87T	TRANSFORMER DIFFERENTIAL RELAY (ELECTROSWITCH)
87U	UNIT DIFFERENTIAL RELAY (ELECTROSWITCH)
94BFI	BREAKER FAILURE RELAY (NGA15AG)
96G( )	TRANSDUCER (G)=WATTS/VARS, (W)=WATTS (V)=VOLTAGE (R)=VARS

DIGITAL GENERATOR PROTECTION (DGP)

DGP54BACA

24A/24T	VOLTS PER HETZ ALARM/TRIP
32-1	REVERSE POWER
40-1,40-2	LOSE OF EXCITATION
46A/46T	NEGATIVE SEQUENCE ALARM/TRIP
51V	SYSTEM PHASE FAULT BACKUP
59G	OVERVOLTAGE RELAY
64G1	GENERATOR STATOR GROUND FAULT
74( )	DGP ALARM OUTPUT CONTACT
81U-1/81O-1	UNDERFREQUENCY/OVERFREQUENCY
87G	GENERATOR DIFFERENTIAL RELAY (DGP)
94G( )	DGP TRIP OUTPUT CONTACT
VTFF	VOLTAGE TRANSFORMER FUSE FAILURE

EX2000 FUNCTIONS

AVR	AUTOMATIC VOLTAGE REGULATOR (AUTO)
FCR	FIELD CURRENT REGULATOR
OEL	OVER EXCITATION LIMIT
RCC	REACTIVE CURRENT COMPENSATION
UEL	UNDER EXCITATION LIMIT
V / HZ	VOLTS PER HERTZ LIMIT
24EX	EX2000 V / HZ ALARM / TRIP
30EX1	EX2000 GLOBAL ALARM OUTPUT RELAY
58EX	EX2000 DIODE FAULT MONITOR ALARM
59EX	EX2000 OVERVOLTAGE ALARM / TRIP
64F	EX2000 GENERATOR FIELD GROUND ALARM / TRIP
76EX	EX2000 OVER EXCITATION ALARM / TRIP
94EX1	EX2000 TRIP OUTPUT RELAY

LEGEND

HMI	TURBINE CONTROL SYSTEM HUMAN MACHINE INTERFACE
LA	LIGHTING ARRESTER
SR	SPARE
GFR	GROUND FAULT RELAY
G.E. / CUSTOMER	TERMINATION POINT

EQUIPMENT LOCATION KEY

BD	BUS DUCT
EX	EX2000
F	FIRE PROTECTION PANEL
GV	GAS FUEL SKID
T	INLET AIR COMPT
	ACCESSORY (LUBE OIL) MODULE DEVICE
	CO2 FIRE PROTECTION SKID
	GE EQUIP MTD SEPERATE FROM PKG
	GENERATOR COMPT DEVICE
	GENERATOR CONTROL PANEL DEVICE
	GENERATOR NEUTRAL ACCESS COMPT (GNAC)
	MOTOR CONTROL CENTER (MCC)
	SWITCHGEAR
	TURBINE COMPT DEVICE
	TURBINE CONTROL PANEL DEVICE (TCP)
	PURCHASER'S EQUIPMENT
AP	AIR PROCESS SKID
APT	AUXILIARY POWER TRANSFORMER
DF	LIQUID (DIST) FUEL FWD SKID
MST	LUBE OIL VENT MIST SEPERATOR
WN	WATER INJECTION SKID
WW	WATER WASH SKID
DWN	DEMIN WATER FORWARDING SKID
CMT	STARING (CRANKING) MTR TRANSFORMER
	COOLING WATER SYSTEM
	CRANKING MOTOR CONTROLLER
	PACKAGE ELECTRICAL & ELECTRONIC CONTROL CENTER (PEECC)

NOTES

1. SEE AGM-02-0204-PLA-E-0006 (CABLE SUMMARY) MLI 0463, FOR INTERCONNECTING CABLE SCOPE OF SUPPLY.

2. CUSTOMER'S SYSTEM SHOULD NOT EXCEED 65000 AMPS RMS SYMMETRICAL SHORT CIRCUIT CURRENT AT THE MCC INCOMING TERMINALS. SEE AGM-02-0204-PLA-I-0046 (DEVICE SUMMARY) MLI 0414 TO VERIFY MOTOR AND HEATER RATINGS.

3a. GENERATOR DIGITAL MULTI-METER (GEN DMM) (NEXUS 1250) SELECTABLE DISPLAYS:
- VOLTS
  3Ø PHASE-PHASE AND PHASE-NEUTRAL
- AMPS 3Ø
- FREQUENCY, MW, MVAR, PF, MVA, MVARHR, MWHR
- 4-20mA OUTPUTS ARE FIELD CONFIGURABLE TO CURRENT, VOLTAGE, PF, VAR, MW AND/OR FREQUENCY
- INCLUDED ONE MODULE OF 4 OUTPUTS
  - INCLUDED TWO MODULES TOTAL 8 OUTPUTS
  - INCLUDED THREE MODULES TOTAL 12 OUTPUTS
  - PULSE OUTPUTS ARE FIELD CONFIGURABLE, KYZ PULSE MODULE DEFAULT CONFIGURED FOR + & - kVARHRS.

3b. GENERATOR DIGITAL MULTI-METER (GEN DMM) (NEXUS 1250) SELECTABLE DISPLAYS:
- VOLTS 3Ø PHASE-PHASE AND PHASE-NEUTRAL
- AMPS 3Ø
- FREQUENCY, MW, MVAR, PF, MVA, MVARHR, MWHR
- PULSE OUTPUTS ARE FIELD CONFIGURABLE. KYZ PULSE MODULE DEFAULT CONFIGURED FOR + & - kVARHRS, KWHRS.

3c. AUXILIARY DIGITAL MULTI-METER (AUX-DMM) SELECTABLE DISPLAYS ARE SAME AS GEN DMM EXCEPT 50kW/kVAR HR PER PULSE.

3d. 4 TO 20mA ANALOG OUTPUTS FOR MW, MVAR, PR, FREG AS WELL AS OTHER TURBINE PARAMETERS ARE AVAILABLE AS FIELD SELECTABLE OUTPUTS OUT OF THE TURBINE CONTROL PANEL; SEE MLI 4108.

4. GENERATOR PROTECTION REQUIRES (3) NORMALLY OPEN AND (3) NORMALLY CLOSED CONTACTS FOR 52G STATUS.

5. VT'S ARE NON-DRAWOUT.

6. ALL LOCKOUT RELAY (86) FUSES ARE MONITORED BY ALARM TO TURBINE CONTROL PANEL. THE 124VDC GENERATOR PANEL POWER SUPPLY IS MONITORED BY ALARM IN THE TURBINE CONRTOL PANEL.

7. THE CRITICAL CONTACT OF THE DGP WILL INITIATE A SIGNAL TO BEGIN NORMAL SHUTDOWN. HOWEVER, IF THERE IS A BACKUP GENERATOR PROTECTION (DGP/SR489/BECKWITH), NORMAL SHUTDOWN WILL OCCUR ONLY WHEN BOTH DGP AND BACKUP FAIL.

8. CT'S ARE C800 CLASS.

9. THIS DRAWING REFLECTS THE ORIGINAL UNIT SPECIFIC DRAWING 194D6865 (PROVIDED BY CUSTOMER) AND INCLUDES DETAILS FOR DUAL FUEL MODIFICATION PER CUSTOMER SCOPE OF WORK.

REV.	FECHA	REVISIONES O MODIFICACIONES	DIBUJO	REVISO	APROBO
A	30/06/11	ISSUED FOR REVIEW	SAB	CB	TK

REF. FABRICANTE		
REF. FABRICANTE	FABRICANTE	O/C:

N° DE DOCUMENTO	DESCRIPCIÓN	REV.	FECHA
AGM-02-0204-PLA-E-0043	WATER INJECTION SKID - ELECTRICAL		
AGM-02-0204-PLA-E-0040	DEMIN WATER FORWARDING SKID - ELECTRICAL		
AGM-02-0204-PLA-E-0036	LIQUID FUEL FORWARDING SKID - ELECTRICAL		
3617814971	ASSY, REMOTE CONTROL SYS (MLI 4108)		
AGM-02-0204-PLA-I-0046	DEVICE SUMMARY		
AGM-02-0204-PLA-E-0006	CABLE SUMMARY		

DOCUMENTOS DE REFERENCIA

DERWICK / ProEnergy SERVICES / CORPOELEC / La Electricidad de Caracas / SENECA

AMPLIACIÓN DE LA CAPACIDAD DE GENERACIÓN Y TRANSPORTE DE ELECTRICIDAD EN LA ISLA DE MARGARITA

ONE LINE DIAGRAM
DUAL FUEL MOD. UNITS 298034 & 298035
(MLI 0444)

PLANO N°: REV:
PROYECTO N°: 409-2956-1

CALCULO:	PROYECTO:	ESCALA: NONE	PLANO No: AGM-02-0204-PLA-E-0008
REVISADO: C. Brown	CALCULO:	FECHA: 30/06/11	
DIBUJO: S. Boerckel	REVISADO: J. Castillo	DISK. N°	
APROBADO: T. Koontz	DIBUJO:	ESC./PLOTEO:	
ARCHIVO:	APROBADO: M. Monticelli	ARCHIVO:	PAGINA: 1 DE: 6 REV. A

F_A1_11 - 841x594mm

N° PLANO: AGM-02-0204-PLA-E-0008 A

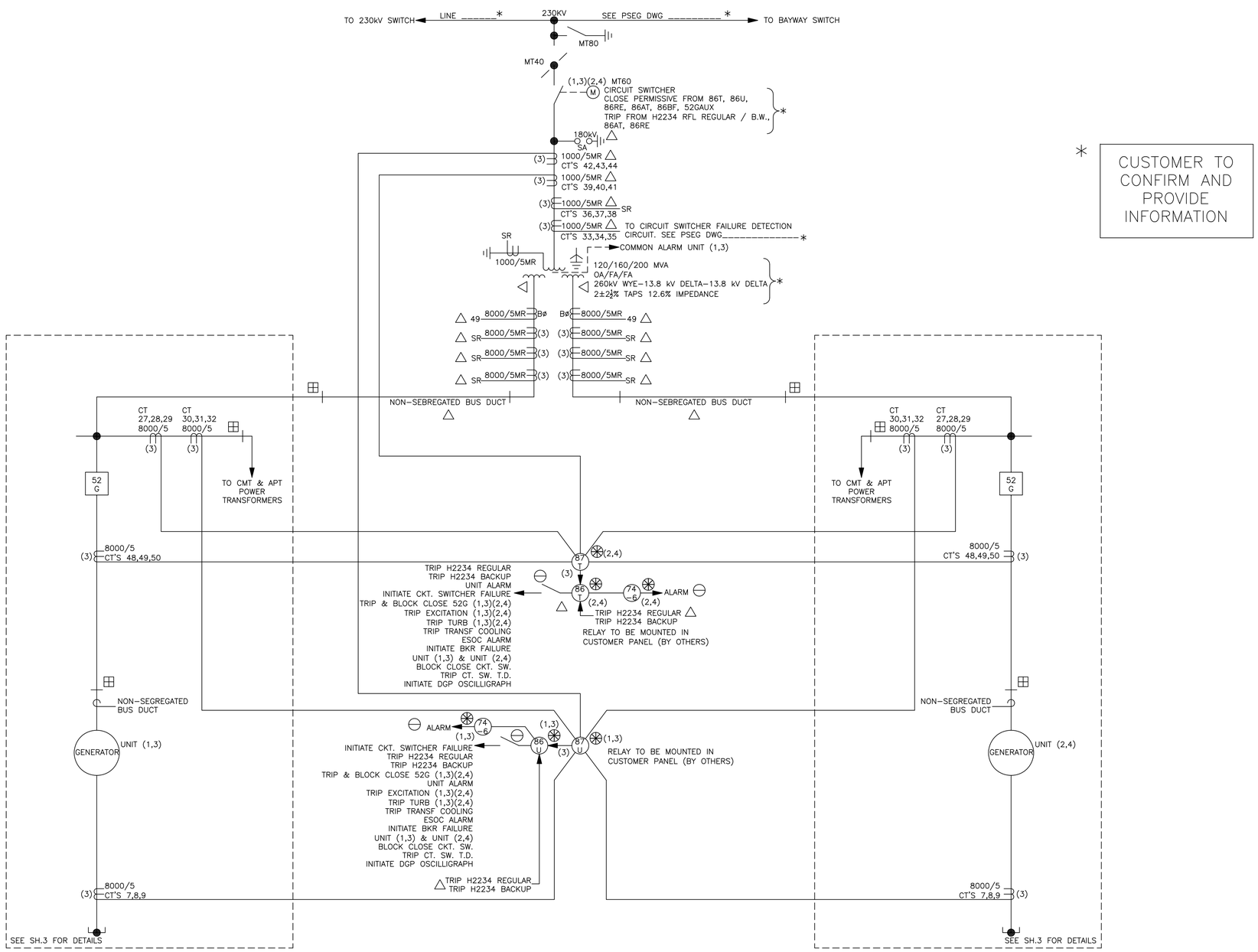

* CUSTOMER TO CONFIRM AND PROVIDE INFORMATION

N° DE DOCUMENTO	DESCRIPCIÓN	REV.	FECHA
AGM-02-0204-PLA-E-0043	WATER INJECTION SKID – ELECTRICAL		
AGM-02-0204-PLA-E-0040	DEMIN WATER FORWARDING SKID – ELECTRICAL		
AGM-02-0204-PLA-E-0036	LIQUID FUEL FORWARDING SKID – ELECTRICAL		
361B149 1	ASSY, REMOTE CONTROL SYS (MLI 4108)		
AGM-02-0204-PLA-I-0046	DEVICE SUMMARY		
AGM-02-0204-PLA-E-0006	CABLE SUMMARY		

DOCUMENTOS DE REFERENCIA

REV.	FECHA	REVISIONES O MODIFICACIONES	DIBUJO	REVISO	APROBO
A	30/06/11	ISSUED FOR REVIEW	SAB	CB	TK

REF. FABRICANTE		
REF. FABRICANTE	FABRICANTE	O/C:

DERWICK ProEnergy SERVICES CORPOELEC La Electricidad de Caracas SENECA

AMPLIACIÓN DE LA CAPACIDAD DE GENERACIÓN Y TRANSPORTE DE ELECTRICIDAD EN LA ISLA DE MARGARITA

ONE LINE DIAGRAM
DUAL FUEL MOD. UNITS 298034 & 298035 (MLI 0444)

PLANO N°: REV:
PROYECTO N°: 409-2956-1

CALCULO:	PROYECTO:	ESCALA: NONE	PLANO No: AGM-02-0204-PLA-E-0008
REVISADO: C. Brown	CALCULO:	FECHA: 30/06/11	
DIBUJO: S. Boerckel	REVISADO: J. Castillo	DISK. N°	
APROBADO: T. Koontz	DIBUJO:	ESC./PLOTEO:	
ARCHIVO:	APROBADO: M. Monticelli	ARCHIVO:	PAGINA: 2 DE: 6 REV. A

F_A1_11 – 841x594mm

N° PLANO: AGM-02-0204-PLA-E-0008 A

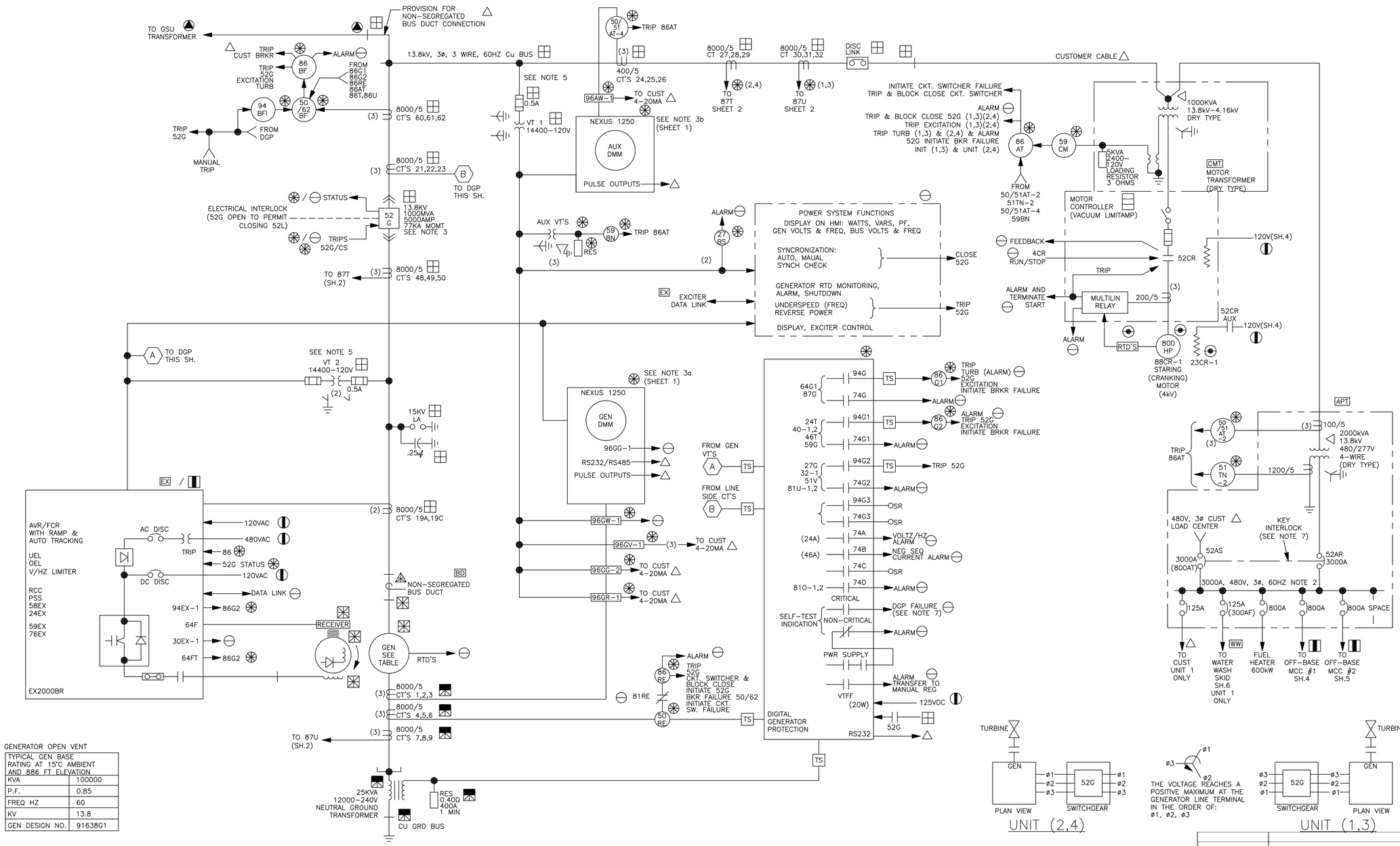

GENERATOR OPEN VENT

TYPICAL GEN BASE RATING AT 15°C AMBIENT AND 886 FT ELEVATION	
KVA	100000
P.F.	0.85
FREQ HZ	60
KV	13.8
GEN DESIGN NO.	91638G1

N° DE DOCUMENTO	DESCRIPCIÓN	REV.	FECHA
AGM-02-0204-PLA-E-0043	WATER INJECTION SKID – ELECTRICAL		
AGM-02-0204-PLA-E-0040	DEMIN WATER FORWARDING SKID – ELECTRICAL		
AGM-02-0204-PLA-E-0036	LIQUID FUEL FORWARDING SKID – ELECTRICAL		
361B149T	ASSY, REMOTE CONTROL SYS (MLI 4108)		
AGM-02-0204-PLA-I-0046	DEVICE SUMMARY		
AGM-02-0204-PLA-E-0006	CABLE SUMMARY		

DOCUMENTOS DE REFERENCIA

REV.	FECHA	REVISIONES O MODIFICACIONES	DIBUJO	REVISO	APROBO
A	30/06/11	ISSUED FOR REVIEW	SAB	CB	TK

REF. FABRICANTE		
REF. FABRICANTE	FABRICANTE	O/C:

DERWICK ASSOCIATES CORP. — ProEnergy REPUESTOS — CORPOELEC — La Electricidad de Caracas — SENECA

AMPLIACIÓN DE LA CAPACIDAD DE GENERACIÓN Y TRANSPORTE DE ELECTRICIDAD EN LA ISLA DE MARGARITA

ONE LINE DIAGRAM
DUAL FUEL MOD. UNITS 298034 & 298035
(MLI 0444)

PLANO N°:	REV:		
PROYECTO N°: 409-2956-1			
CALCULO:	PROYECTO:	ESCALA: NONE	PLANO No:
REVISADO: C. Brown	CALCULO:	FECHA: 30/06/11	AGM-02-0204-PLA-E-0008
DIBUJO: S. Boerckel	REVISADO: J. Castillo	DISK. N°	
APROBADO: T. Koontz	DIBUJO:	ESC./PLOTEO:	
ARCHIVO:	APROBADO: M. Monticelli	ARCHIVO:	PAGINA: 3 DE: 6 — REV. A

F_A1_11 – 841x594mm

LINEA DE CORTE DE ORIGINAL
LINEA DE CORTE DE COPIA

A | N° PLANO: AGM-02-0204-PLA-E-0008

IMPORTANTE

ESTE PLANO FUE ELABORADO EN AUTOCAD V.2008
CUALQUIER MODIFICACION REALIZADA EN CAMPO DEBERA SER NOTIFICADO A LA UNIDAD RESPONSABLE.
QUEDA PROHIBIDO CORREGIR ESTE PLANO SIN AUTORIZACION DE ESTA UNIDAD.

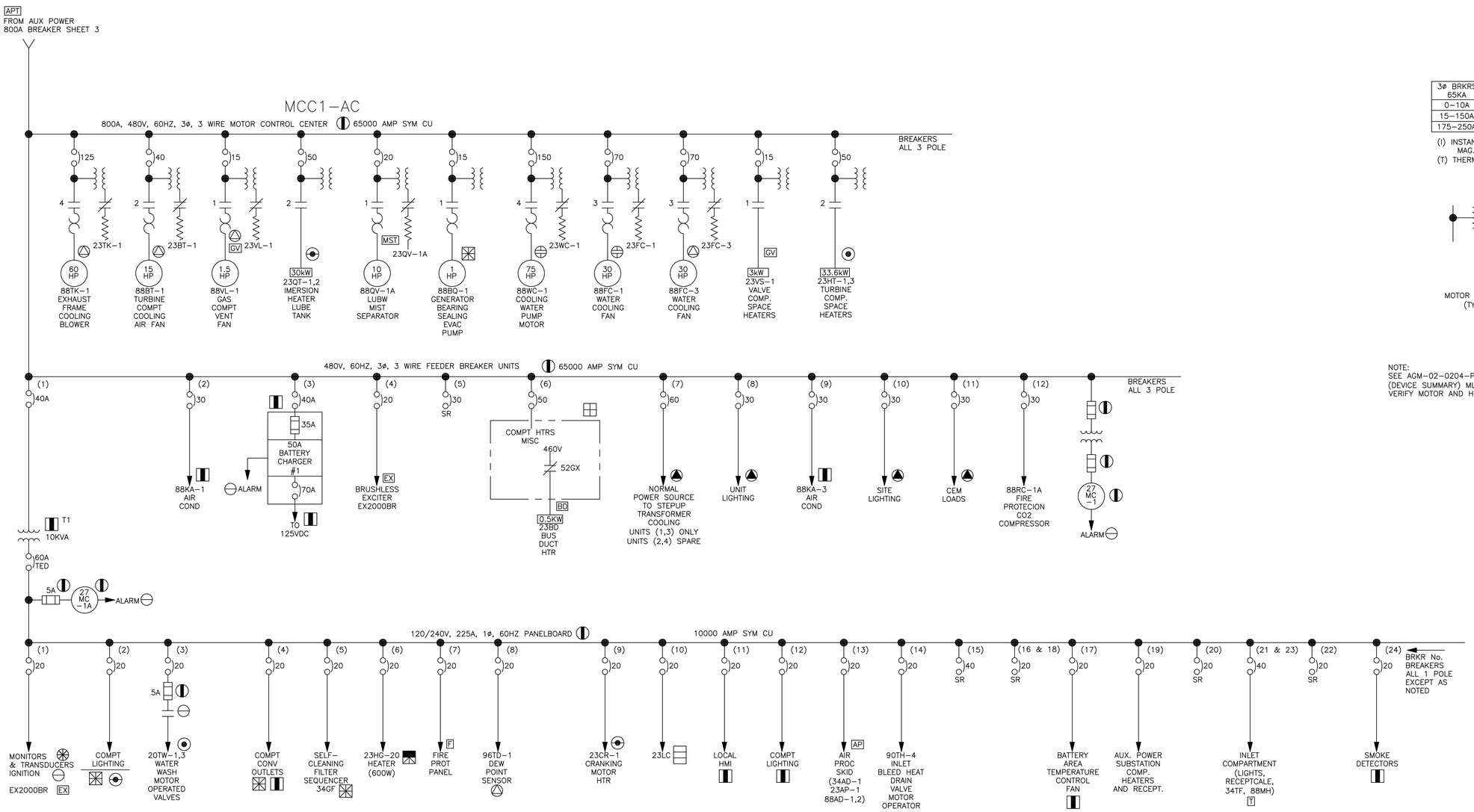

3ø BRKRS 65KA	SPECTRA TYPE
0–10A	SEL(I)
15–150A	SEL(T)
175–250A	SEL(T)

(I) INSTANTANEOUS MAG. ONLY
(T) THERMAL MAG

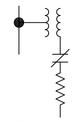

MOTOR SPACE HTR (TYPICAL)

NOTE:
SEE AGM–02–0204–PLA–I–0046 (DEVICE SUMMARY) MLI 0414 TO VERIFY MOTOR AND HEATER RATING.

N° DE DOCUMENTO	DESCRIPCIÓN	REV.	FECHA
AGM–02–0204–PLA–E–0043	WATER INJECTION SKID – ELECTRICAL		
AGM–02–0204–PLA–E–0040	DEMIN WATER FORWARDING SKID – ELECTRICAL		
AGM–02–0204–PLA–E–0036	LIQUID FUEL FORWARDING SKID – ELECTRICAL		
361831491	ASSY, REMOTE CONTROL SYS (MLI 4108)		
AGM–02–0204–PLA–I–0046	DEVICE SUMMARY		
AGM–02–0204–PLA–E–0006	CABLE SUMMARY		

DOCUMENTOS DE REFERENCIA

REV.	FECHA	REVISIONES O MODIFICACIONES	DIBUJO	REVISO	APROBO
A	30/06/11	ISSUED FOR REVIEW	SAB	CB	TK

REF. FABRICANTE		
REF. FABRICANTE	FABRICANTE	O/C:

DERWICK Believe in Better Service Power | ProEnergy SERVICES | CORPOELEC | La Electricidad de Caracas | GERENCIA FUNCIONAL DE INGENIERÍA Y PROYECTOS SENECA

AMPLIACIÓN DE LA CAPACIDAD DE GENERACIÓN Y TRANSPORTE DE ELECTRICIDAD EN LA ISLA DE MARGARITA

ONE LINE DIAGRAM
DUAL FUEL MOD. UNITS 298034 & 298035 (MLI 0444)

PLANO N°:	REV:		
PROYECTO N°: 409–2956–1			
CALCULO:	PROYECTO:	ESCALA: NONE	PLANO No: AGM–02–0204–PLA–E–0008
REVISADO: C. Brown	CALCULO:	FECHA: 30/06/11	
DIBUJO: S. Boerckel	REVISADO: J. Castillo	DISK. N°	
APROBADO: T. Koontz	DIBUJO:	ESC./PLOTEO:	
ARCHIVO:	APROBADO: M. Monticelli	ARCHIVO:	PAGINA: 4 DE: 6 — REV. A

F_A1_11 – 841x594mm

LINEA DE CORTE DE COPIA
LINEA DE CORTE DE ORIGINAL

A AGM-02-0204-PLA-E-0008
N° PLANO:

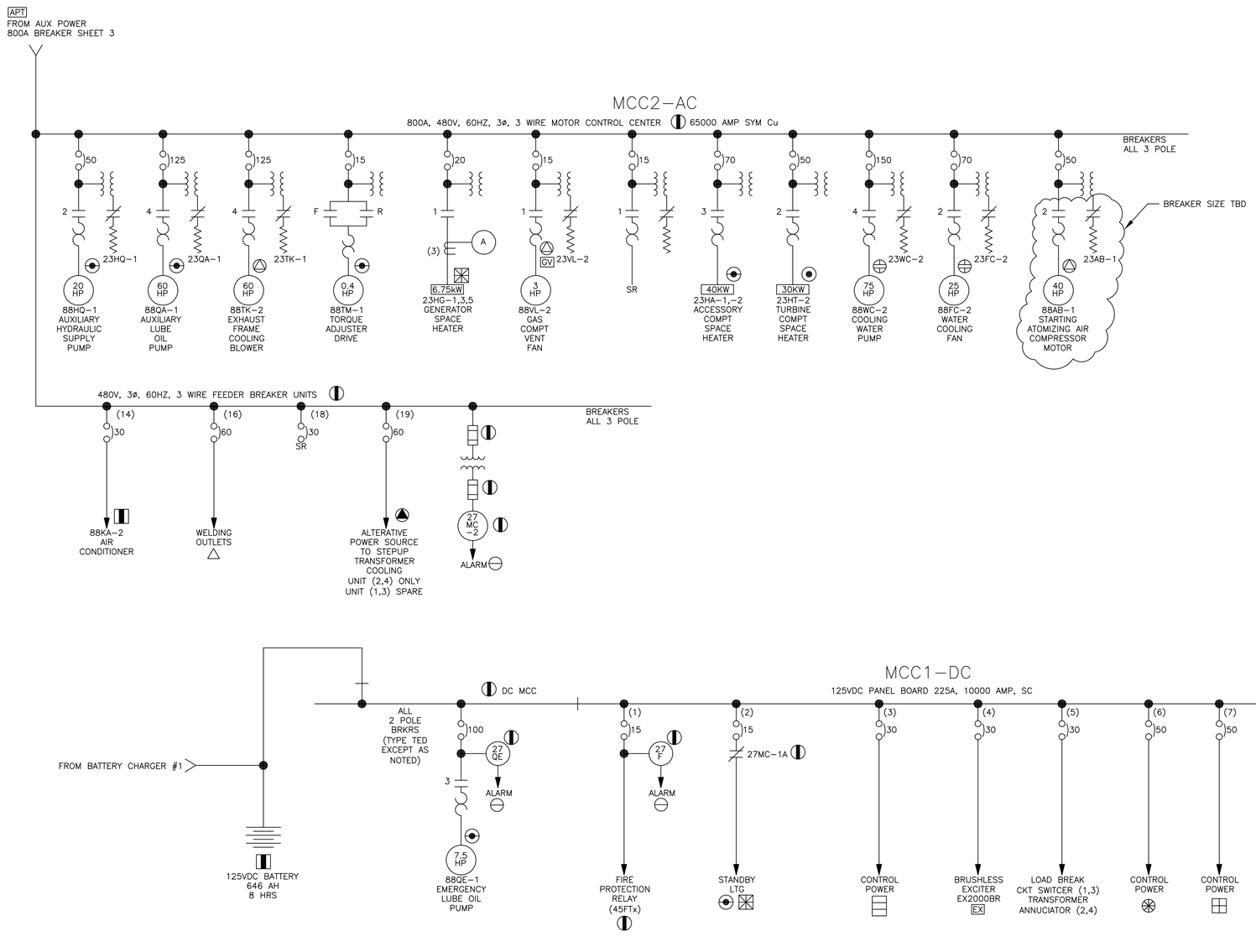

3ø BRKRS 65KA	SPECTRA TYPE
0–10A	SEL(I)
15–150A	SEL(T)
175–250A	SEL(T)

(I) INSTANTANEOUS MAG. ONLY
(T) THERMAL MAG

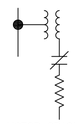

MOTOR SPACE HTR
(TYPICAL)

NOTE:
SEE AGM-02-0204-PLA-I-0046
(DEVICE SUMMARY) MLI 0414 TO
VERIFY MOTOR AND HEATER RATING.

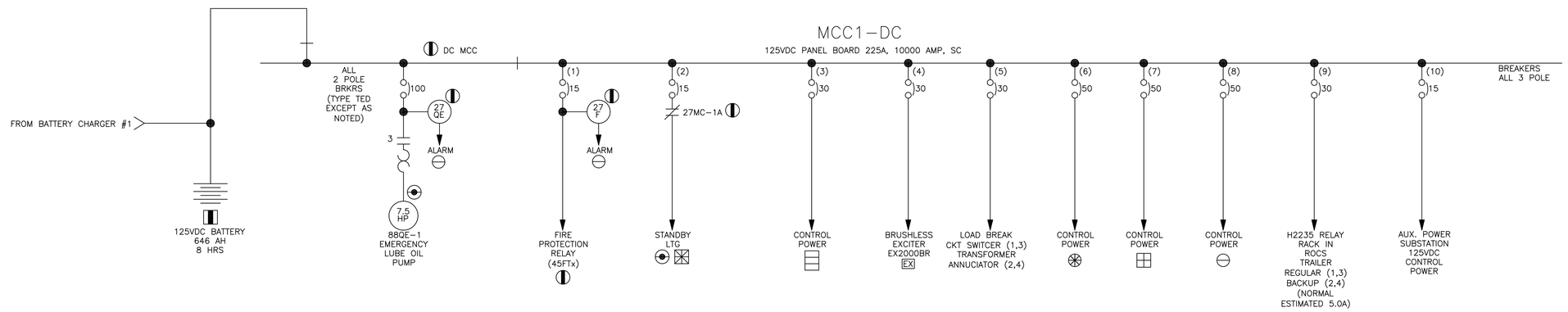

N° DE DOCUMENTO	DESCRIPCIÓN	REV.	FECHA
AGM-02-0204-PLA-E-0043	WATER INJECTION SKID – ELECTRICAL		
AGM-02-0204-PLA-E-0040	DEMIN WATER FORWARDING SKID – ELECTRICAL		
AGM-02-0204-PLA-E-0036	LIQUID FUEL FORWARDING SKID – ELECTRICAL		
3 6 1 3 1 4 9 1	ASSY, REMOTE CONTROL SYS (MLI 4108)		
AGM-02-0204-PLA-I-0046	DEVICE SUMMARY		
AGM-02-0204-PLA-E-0006	CABLE SUMMARY		

DOCUMENTOS DE REFERENCIA

REV.	FECHA	REVISIONES O MODIFICACIONES	DIBUJO	REVISO	APROBO
A	30/06/11	ISSUED FOR REVIEW	SAB	CB	TK

REF. FABRICANTE		
REF. FABRICANTE	FABRICANTE	O/C:

DERWICK ASSOCIATES CORP. · ProEnergy SERVICES · CORPOELEC CORPORACIÓN ELÉCTRICA NACIONAL · La Electricidad de Caracas · GERENCIA FUNCIONAL DE INGENIERÍA Y PROYECTOS · SENECA

AMPLIACIÓN DE LA CAPACIDAD DE GENERACIÓN Y TRANSPORTE DE ELECTRICIDAD EN LA ISLA DE MARGARITA

ONE LINE DIAGRAM
DUAL FUEL MOD. UNITS 298034 & 298035
(MLI 0444)

PLANO N°:	REV:		
PROYECTO N°: 409-2956-1			
CALCULO:	PROYECTO:	ESCALA: NONE	PLANO No: AGM-02-0204-PLA-E-0008
REVISADO: C. Brown	CALCULO:	FECHA: 30/06/11	
DIBUJO: S. Boerckel	REVISADO: J. Castillo	DISK. N°	
APROBADO: T. Koontz	DIBUJO:	ESC./PLOTEO:	
ARCHIVO:	APROBADO: M. Monticelli	ARCHIVO:	PAGINA: 5 DE: 6 — REV. A

F_A1_11 – 841x594mm

LINEA DE CORTE DE ORIGINAL
LINEA DE CORTE DE COPIA

N° PLANO: AGM-02-0204-PLA-E-0008 A

IMPORTANTE
ESTE PLANO FUE ELABORADO EN AUTOCAD V.2008
CUALQUIER MODIFICACION REALIZADA EN CAMPO
DEBERA SER NOTIFICADO A LA UNIDAD
RESPONSABLE.
QUEDA PROHIBIDO CORREGIR ESTE PLANO SIN
AUTORIZACION DE ESTA UNIDAD.

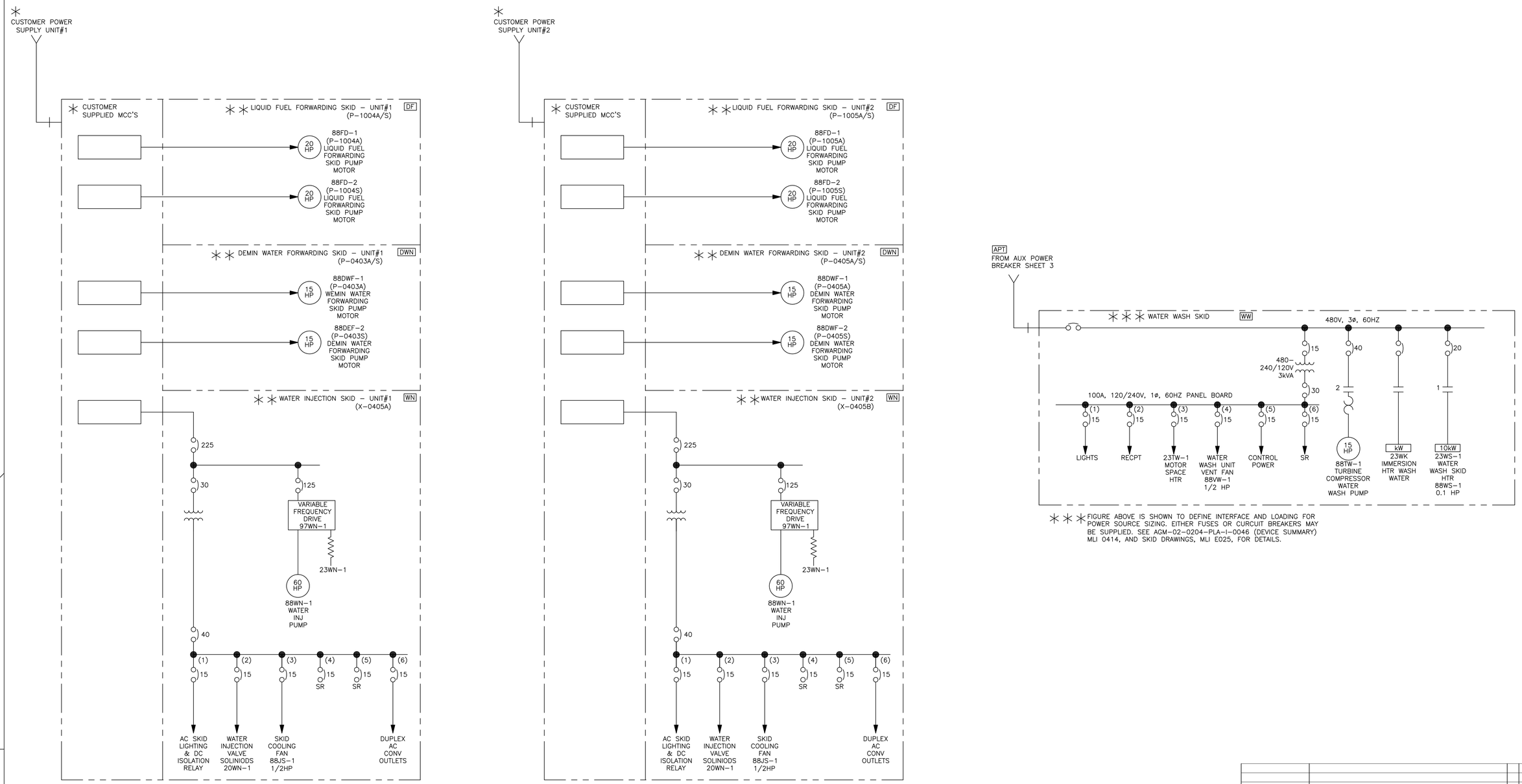

✳ CUSTOMER DESIGNED & SUPPLIED MCC'S, CABLE, & CONDUIT

✳✳ FIGURES ABOVE ARE SHOWN TO DEFINE INTERFACE AND LOADING FOR POWER SOURCE SIZING. EITHER FUSES OR CURCUIT BREAKERS MAY BE SUPPLIED. SEE AGM–02–0204–PLA–I–0046 (DEVICE SUMMARY) MLI 0414, AND SKID DRAWING, AGM–02–0204–PLA–E–0036 (LIQUID FUEL FORWARDING SKID – ELECTRICAL), AGM–02–0204–PLA–E–0040 (DEMIN WATER FORWARDING SKID – ELECTRICAL), AND AGM–02–0204–PLA–E–0043 WATER INJECTION SLID – ELECTRICAL) FOR DETAILS.

✳✳✳ FIGURE ABOVE IS SHOWN TO DEFINE INTERFACE AND LOADING FOR POWER SOURCE SIZING. EITHER FUSES OR CURCUIT BREAKERS MAY BE SUPPLIED. SEE AGM–02–0204–PLA–I–0046 (DEVICE SUMMARY) MLI 0414, AND SKID DRAWINGS, MLI E025, FOR DETAILS.

N° DE DOCUMENTO	DESCRIPCIÓN	REV.	FECHA
AGM–02–0204–PLA–E–0043	WATER INJECTION SKID – ELECTRICAL		
AGM–02–0204–PLA–E–0040	DEMIN WATER FORWARDING SKID – ELECTRICAL		
AGM–02–0204–PLA–E–0036	LIQUID FUEL FORWARDING SKID – ELECTRICAL		
361 81 49 1	ASSY, REMOTE CONTROL SYS (MLI 4108)		
AGM–02–0204–PLA–I–0046	DEVICE SUMMARY		
AGM–02–0204–PLA–E–0006	CABLE SUMMARY		

DOCUMENTOS DE REFERENCIA

REV.	FECHA	REVISIONES O MODIFICACIONES	DIBUJO	REVISO	APROBO
A	30/06/11	ISSUED FOR REVIEW	SAB	CB	TK

REF. FABRICANTE		
REF. FABRICANTE	FABRICANTE	O/C:

DERWICK Siemens Joint Venture Essen · ProEnergy SERVICES · CORPOELEC CORPORACIÓN ELÉCTRICA NACIONAL · La Electricidad de Caracas · GERENCIA FUNCIONAL DE INGENIERÍA Y PROYECTOS · SENECA

AMPLIACIÓN DE LA CAPACIDAD DE GENERACIÓN Y TRANSPORTE DE ELECTRICIDAD EN LA ISLA DE MARGARITA

ONE LINE DIAGRAM
DUAL FUEL MOD. UNITS 298034 & 298035
(MLI 0444)

PLANO N°:	REV:		
PROYECTO N°: 409–2956–1			
CALCULO:	PROYECTO:	ESCALA: NONE	PLANO No: AGM–02–0204–PLA–E–0008
REVISADO: C. Brown	CALCULO:	FECHA: 30/06/11	
DIBUJO: S. Boerckel	REVISADO: J. Castillo	DISK. N°	
APROBADO: T. Koontz	DIBUJO:	ESC./PLOTEO:	
ARCHIVO:	APROBADO: M. Monticelli	ARCHIVO:	PAGINA: 6 DE: 6 — REV. A

F_A1_11 – 841x594mm

LINEA DE CORTE DE COPIA
LINEA DE CORTE DE ORIGINAL

LINEA DE CORTE DE ORIGINAL
LINEA DE CORTE DE COPIA

AGM-02-0204-PLA-E-0036 | 0
N° PLANO:

IMPORTANTE
ESTE PLANO FUE ELABORADO EN AUTOCAD V.2008
CUALQUIER MODIFICACION REALIZADA EN CAMPO
DEBERA SER NOTIFICADO A LA UNIDAD
RESPONSABLE.
QUEDA PROHIBIDO CORREGIR ESTE PLANO SIN
AUTORIZACION DE ESTA UNIDAD.

NOTES:

1. FOR WIRE INTERCONNECTION REFER TO AGM-02-0204-PLA-E-0058 (INTERCONNECTION WIRING DIAGRAM) & AGM-02-0204-PLA-E-0006 (CABLE SUMMARY).
2. FOR JUNCTION BOX & INSTRUMENT LOCATIONS REFER TO AGM-02-0204-PLA-M-0034 (LIQUID FUEL FORWARDING PUMP SKID - GENERAL ARRANGEMENT).
3. FOR INSTRUMENT SET POINTS REFER TO AGM-02-0204-PLA-I-0046 (DEVICE SUMMARY).

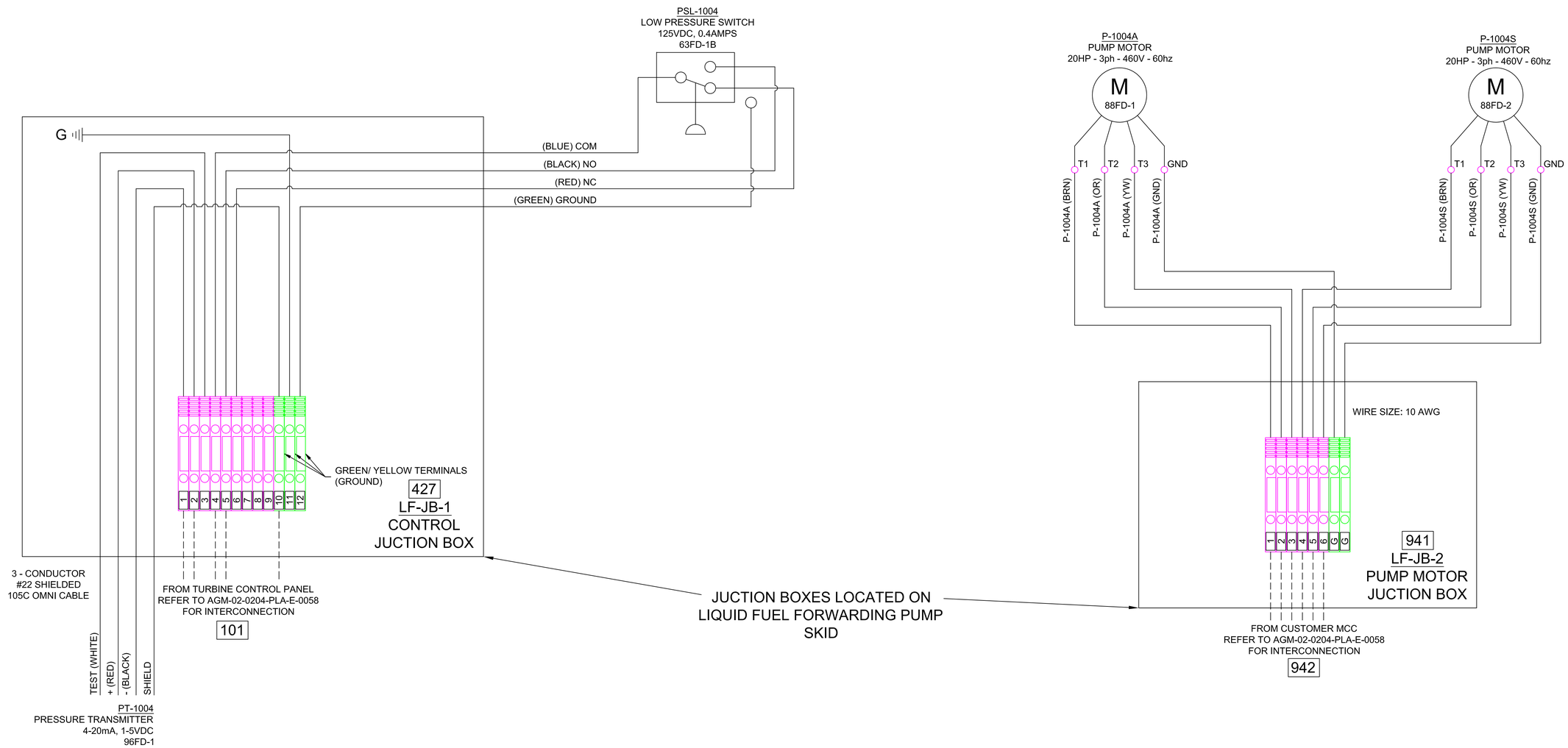

N° DE DOCUMENTO	DESCRIPCIÓN	REV.	FECHA
AGM-02-0204-PLA-I-0046	DEVICE SUMMARY		
AGM-02-0204-PLA-I-0006	CABLE SUMMARY		
AGM-02-0204-PLA-E-0058	INTERCONNECTION WIRING DIAGRAM		
AGM-02-0204-PLA-M-0034	LIQUID FUEL FORWARDING SKID – GENERAL ARRANGEMENT		

DOCUMENTOS DE REFERENCIA

REV.	FECHA	REVISIONES O MODIFICACIONES	DIBUJO	REVISO	APROBO
0	29/08/11	ISSUED FOR CONSTRUCTION	SAB	CB	TK
B	29/06/11	ISSUED FOR REVIEW	SAB	CB	TK
A	15/02/11	ISSUED FOR REVIEW	SAB	CB	TK

REF. FABRICANTE	FABRICANTE	O/C:
REF. FABRICANTE		

DERWICK Distribución Venezuela C.A. | ProEnergy SERVICES | CORPOELEC | La Electricidad de Caracas | GERENCIA FUNCIONAL DE INGENIERIA Y PROYECTOS | SENECA

AMPLIACIÓN DE LA CAPACIDAD DE GENERACIÓN Y TRANSPORTE DE ELECTRICIDAD EN LA ISLA DE MARGARITA

LIQUID FUEL FORWARDING SKID
DUAL FUEL MOD. UNITS 298034 & 298035
(ELECTRICAL P-1004A/S)

PLANO N°:	REV:		
PROYECTO N°: 409-2956-1			
CALCULO:	PROYECTO:	ESCALA: NONE	PLANO No: AGM-02-0204-PLA-E-0036
REVISADO: C. Brown	CALCULO:	FECHA: 29/08/11	
DIBUJO: S. Boerckel	REVISADO: J. Castillo	DISK. N°	
APROBADO: T. Koontz	DIBUJO:	ESC./PLOTEO:	
ARCHIVO:	APROBADO: M. Monticelli	ARCHIVO:	PAGINA: 1 DE: 2 — REV. 0

F_A1_11 – 841x594mm

LINEA DE CORTE DE COPIA
LINEA DE CORTE DE ORIGINAL

LINEA DE CORTE DE ORIGINAL
LINEA DE CORTE DE COPIA

AGM-02-0204-PLA-M-0036 / 0
N° PLANO:

IMPORTANTE
ESTE PLANO FUE ELABORADO EN AUTOCAD V.2008
CUALQUIER MODIFICACION REALIZADA EN CAMPO
DEBERA SER NOTIFICADO A LA UNIDAD
RESPONSABLE.
QUEDA PROHIBIDO CORREGIR ESTE PLANO SIN
AUTORIZACION DE ESTA UNIDAD.

NOTES:

1. FOR WIRE INTERCONNECTION REFER TO AGM-02-0204-PLA-E-0058 (INTERCONNECTION WIRING DIAGRAM) & AGM-02-0204-PLA-E-0006 (CABLE SUMMARY).
2. FOR JUNCTION BOX & INSTRUMENT LOCATIONS REFER TO AGM-02-0204-PLA-M-0034 (LIQUID FUEL FORWARDING PUMP SKID - GENERAL ARRANGEMENT).
3. FOR INSTRUMENT SET POINTS REFER TO AGM-02-0204-PLA-I-0046 (DEVICE SUMMARY).

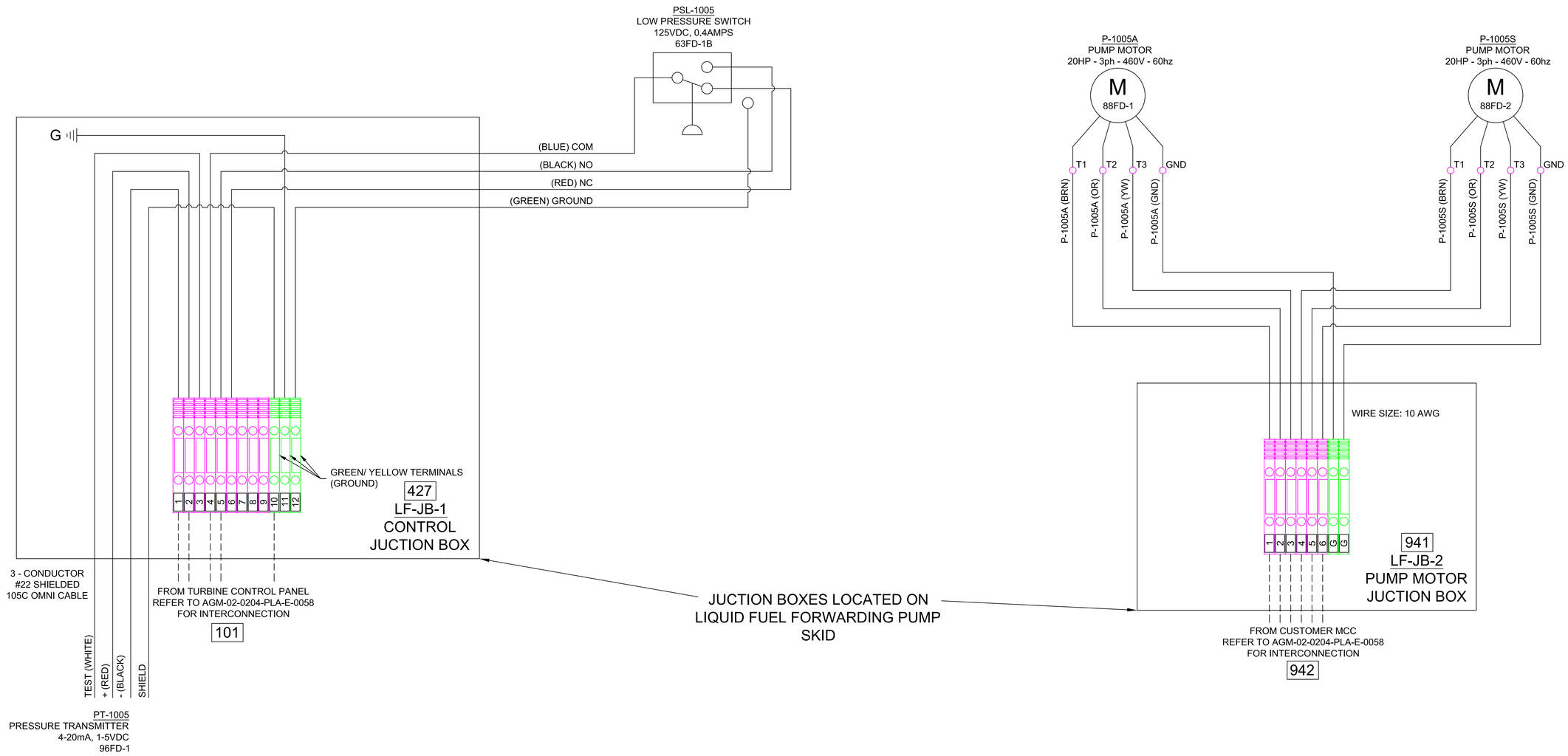

N° DE DOCUMENTO	DESCRIPCIÓN	REV.	FECHA
AGM-02-0204-PLA-I-0046	DEVICE SUMMARY		
AGM-02-0204-PLA-I-0006	CABLE SUMMARY		
AGM-02-0204-PLA-E-0058	INTERCONNECTION WIRING DIAGRAM		
AGM-02-0204-PLA-M-0034	LIQUID FUEL FORWARDING SKID – GENERAL ARRANGEMENT		

DOCUMENTOS DE REFERENCIA

REV.	FECHA	REVISIONES O MODIFICACIONES	DIBUJO	REVISO	APROBO
0	29/08/11	ISSUED FOR CONSTRUCTION	SAB	CB	TK
B	29/06/11	ISSUED FOR REVIEW	SAB	CB	TK
A	15/02/11	ISSUED FOR REVIEW	SAB	CB	TK

REF. FABRICANTE	FABRICANTE	O/C:
REF. FABRICANTE		

DERWICK Venezuela Associates Corp. · ProEnergy SERVICES · CORPOELEC · La Electricidad de Caracas · GERENCIA FUNCIONAL DE INGENIERIA Y PROYECTOS · SENECA

AMPLIACIÓN DE LA CAPACIDAD DE GENERACIÓN Y TRANSPORTE DE ELECTRICIDAD EN LA ISLA DE MARGARITA

LIQUID FUEL FORWARDING SKID
DUAL FUEL MOD. UNITS 298034 & 298035
(ELECTRICAL P-1005A/S)

PLANO N°:	REV:		
PROYECTO N°: 409-2956-1			
CALCULO:	PROYECTO:	ESCALA: NONE	PLANO No: AGM-02-0204-PLA-M-0036
REVISADO: C. Brown	CALCULO:	FECHA: 29/08/11	
DIBUJO: S. Boerckel	REVISADO: J. Castillo	DISK. N°	
APROBADO: T. Koontz	DIBUJO:	ESC./PLOTEO:	
ARCHIVO:	APROBADO: M. Monticelli	ARCHIVO:	PAGINA: 2 DE: 2 — REV. 0

F_A1_11 – 841x594mm

LINEA DE CORTE DE COPIA
LINEA DE CORTE DE ORIGINAL

N° PLANO: AGM-02-0204-PLA-E-0040 | 0

NOTES:

1. FOR WIRE INTERCONNECTION REFER TO AGM-02-0204-PLA-E-0058 (INTERCONNECTION WIRING DIAGRAM) & AGM-02-0204-PLA-E-0006 (CABLE SUMMARY).
2. FOR JUNCTION BOX & INSTRUMENT LOCATIONS REFER TO AGM-02-0204-PLA-M-0038 (DEMIN WATER FORWARDING PUMP SKID - GENERAL ARRANGEMENT).
3. FOR INSTRUMENT SET POINTS REFER TO AGM-02-0204-PLA-I-0046 (DEVICE SUMMARY).

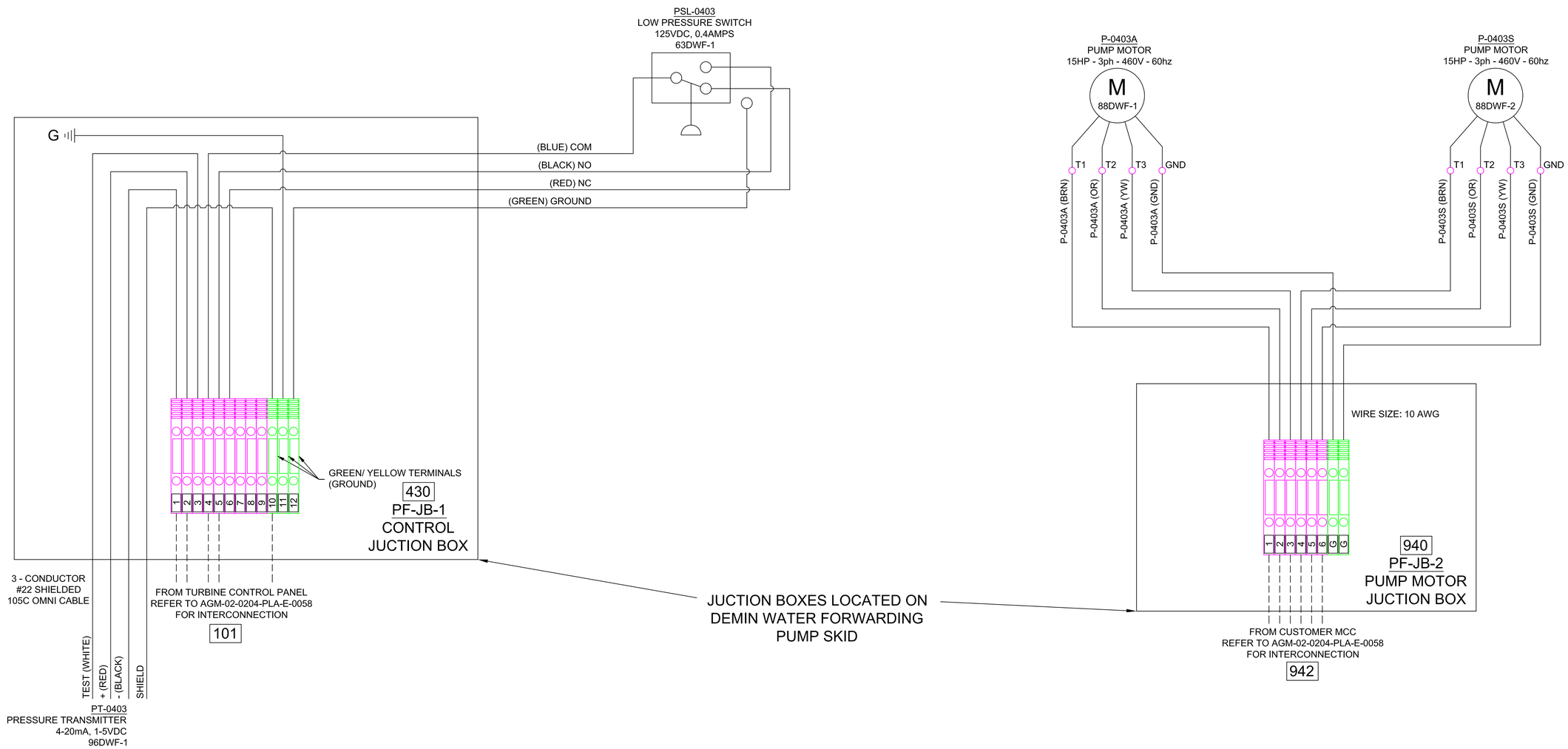

N° DE DOCUMENTO	DESCRIPCIÓN	REV.	FECHA
AGM-02-0204-PLA-I-0046	DEVICE SUMMARY		
AGM-02-0204-PLA-I-0006	CABLE SUMMARY		
AGM-02-0204-PLA-E-0058	INTERCONNECTION WIRING DIAGRAM		
AGM-02-0204-PLA-M-0038	DEMIN WATER FORWARDING SKID – GENERAL ARRANGEMENT		

DOCUMENTOS DE REFERENCIA

REV.	FECHA	REVISIONES O MODIFICACIONES	DIBUJO	REVISO	APROBO
0	29/08/11	ISSUED FOR CONSTRUCTION	SAB	CB	TK
B	21/06/11	ISSUED FOR REVIEW	SAB	CB	TK
A	15/02/11	ISSUED FOR REVIEW	SAB	CB	TK

REF. FABRICANTE	FABRICANTE	O/C:
REF. FABRICANTE		

DERWICK Venezuela Associates Corp. | ProEnergy SERVICES | CORPOELEC | La Electricidad de Caracas | GERENCIA FUNCIONAL DE INGENIERIA Y PROYECTOS | SENECA

AMPLIACIÓN DE LA CAPACIDAD DE GENERACIÓN Y TRANSPORTE DE ELECTRICIDAD EN LA ISLA DE MARGARITA

DEMIN WATER FORWARDING SKID
DUAL FUEL MOD. UNITS 298034 & 298035
(ELECTRICAL – P-0403A/S)

PLANO N°:	REV:		
PROYECTO N°: 409-2956-1			
CALCULO:	PROYECTO:	ESCALA: NONE	PLANO No: AGM-02-0204-PLA-E-0040
REVISADO: C. Brown	CALCULO:	FECHA: 29/08/11	
DIBUJO: S. Boerckel	REVISADO: J. Castillo	DISK. N°	
APROBADO: T. Koontz	DIBUJO:	ESC./PLOTEO:	
ARCHIVO:	APROBADO: M. Monticelli	ARCHIVO:	PAGINA: 1 DE: 2 — REV. 0

F_A1_11 – 841x594mm

LINEA DE CORTE DE ORIGINAL
LINEA DE CORTE DE COPIA

AGM-02-0204-PLA-E-0040
N° PLANO:
0

IMPORTANTE
ESTE PLANO FUE ELABORADO EN AUTOCAD V.2008
CUALQUIER MODIFICACION REALIZADA EN CAMPO
DEBERA SER NOTIFICADO A LA UNIDAD
RESPONSABLE.
QUEDA PROHIBIDO CORREGIR ESTE PLANO SIN
AUTORIZACION DE ESTA UNIDAD.

NOTES:

1. FOR WIRE INTERCONNECTION REFER TO AGM-02-0204-PLA-E-0058 (INTERCONNECTION WIRING DIAGRAM) & AGM-02-0204-PLA-E-0006 (CABLE SUMMARY).
2. FOR JUNCTION BOX & INSTRUMENT LOCATIONS REFER TO AGM-02-0204-PLA-M-0038 (DEMIN WATER FORWARDING PUMP SKID - GENERAL ARRANGEMENT).
3. FOR INSTRUMENT SET POINTS REFER TO AGM-02-0204-PLA-I-0046 (DEVICE SUMMARY).

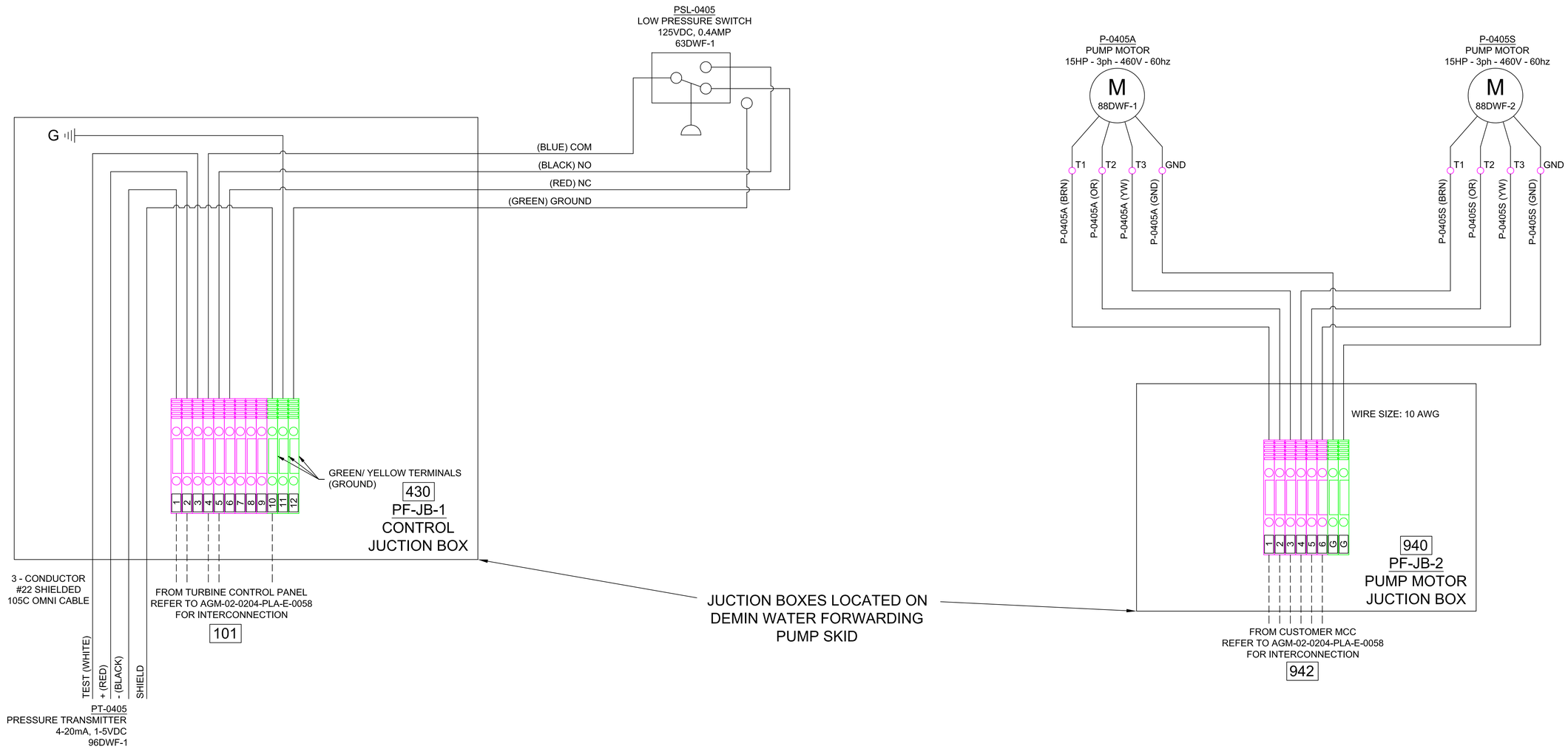

N° DE DOCUMENTO	DESCRIPCIÓN	REV.	FECHA
AGM-02-0204-PLA-I-0046	DEVICE SUMMARY		
AGM-02-0204-PLA-I-0006	CABLE SUMMARY		
AGM-02-0204-PLA-E-0058	INTERCONNECTION WIRING DIAGRAM		
AGM-02-0204-PLA-M-0038	DEMIN WATER FORWARDING SKID – GENERAL ARRANGEMENT		

DOCUMENTOS DE REFERENCIA

REV.	FECHA	REVISIONES O MODIFICACIONES	DIBUJO	REVISO	APROBO
0	29/08/11	ISSUED FOR CONSTRUCTION	SAB	CB	TK
B	21/06/11	ISSUED FOR REVIEW	SAB	CB	TK
A	15/02/11	ISSUED FOR REVIEW	SAB	CB	TK

REF. FABRICANTE	FABRICANTE	O/C:
REF. FABRICANTE		

DERWICK Venezuela Associates Corp. · ProEnergy SERVICES · CORPOELEC · La Electricidad de Caracas · GERENCIA FUNCIONAL DE INGENIERIA Y PROYECTOS · SENECA

AMPLIACIÓN DE LA CAPACIDAD DE GENERACIÓN Y TRANSPORTE DE ELECTRICIDAD EN LA ISLA DE MARGARITA

DEMIN WATER FORWARDING SKID
DUAL FUEL MOD. UNITS 298034 & 298035
(ELECTRICAL – P-0405A/S)

PLANO N°:	REV:		
PROYECTO N°: 409-2956-1			
CALCULO:	PROYECTO:	ESCALA: NONE	PLANO No: AGM-02-0204-PLA-E-0040
REVISADO: C. Brown	CALCULO:	FECHA: 29/08/11	
DIBUJO: S. Boerckel	REVISADO: J. Castillo	DISK. N°	
APROBADO: T. Koontz	DIBUJO:	ESC./PLOTEO:	
ARCHIVO:	APROBADO: M. Monticelli	ARCHIVO:	PAGINA: 2 DE: 2 — REV. 0

F_A1_11 – 841x594mm

LINEA DE CORTE DE COPIA
LINEA DE CORTE DE ORIGINAL

N° PLANO: AGM-02-0204-PLA-E-0043 | 0

NOTES:

1. COMPONENTS AND DEVICES ARE SHOWN IN THE DE–ENERGISED STATE, UNLESS OTHERWISE NOTED.
2. WIRING AND COMPONENTS REPRESENTED BY DASHED LINES ARE NOT PART OF SCOPE OF SUPPLY.
3. FOR WIRE INTERCONNECTION REFER TO AGM–02–0204–PLA–E–0058 (INTERCONNECTION WIRING DIAGRAM) & AGM–02–0204–PLA–E–0006 (CABLE SUMMARY).
4. FOR INSTRUMENT SET POINTS REFER TO AGM–02–0204–PLA–I–0046 (DEVICE SUMMARY).
5. REFER TO AGM–02–0204–PLA–E–0008 (ONELINE DIAGRAM) FOR POWER SOURCE DETAILS.

REV.	FECHA	REVISIONES O MODIFICACIONES	DIBUJO	REVISO	APROBO
0	07/07/11	ISSUED FOR CONSTRUCTION	SAB	CB	TK
B	29/06/11	ISSUED FOR REVIEW	SAB	CB	TK
A	15/02/11	ISSUED FOR REVIEW	SAB	CB	TK

REF. FABRICANTE		
REF. FABRICANTE	FABRICANTE	O/C:

N° DE DOCUMENTO	DESCRIPCIÓN	REV.	FECHA
AGM–02–0204–PLA–E–0008	ONE LINE DIAGRAM		
AGM–02–0204–PLA–I–0046	DEVICE SUMMARY		
AGM–02–0204–PLA–E–0006	CABLE SUMMARY		
AGM–02–0204–PLA–E–0058	INTERCONNECTION WIRING DIAGRAM		

DOCUMENTOS DE REFERENCIA

DERWICK ASSOCIATES CORP. | ProEnergy SERVICES | CORPOELEC | La Electricidad de Caracas | GERENCIA FUNCIONAL DE INGENIERIA Y PROYECTOS | SENECA

AMPLIACIÓN DE LA CAPACIDAD DE GENERACIÓN Y TRANSPORTE DE ELECTRICIDAD EN LA ISLA DE MARGARITA

WATER INJECTION SKID
UNITS 298034 & 298035
ELECTRICAL

PLANO N°:	REV:		
PROYECTO N°: 409–2956–1			
CALCULO:	PROYECTO:	ESCALA: NONE	PLANO No:
REVISADO: C. Brown	CALCULO:	FECHA: 07/07/11	AGM-02-0204-PLA-E-0043
DIBUJO: S. Boerckel	REVISADO: J. Castillo	DISK. N°	
APROBADO: T. Koontz	DIBUJO:	ESC./PLOTEO:	
ARCHIVO:	APROBADO: M. Monticelli	ARCHIVO:	PAGINA: 1 DE: 4 — REV. 0

F_A1_11 – 841x594mm

N° PLANO: AGM-02-0204-PLA-E-0043 | 0

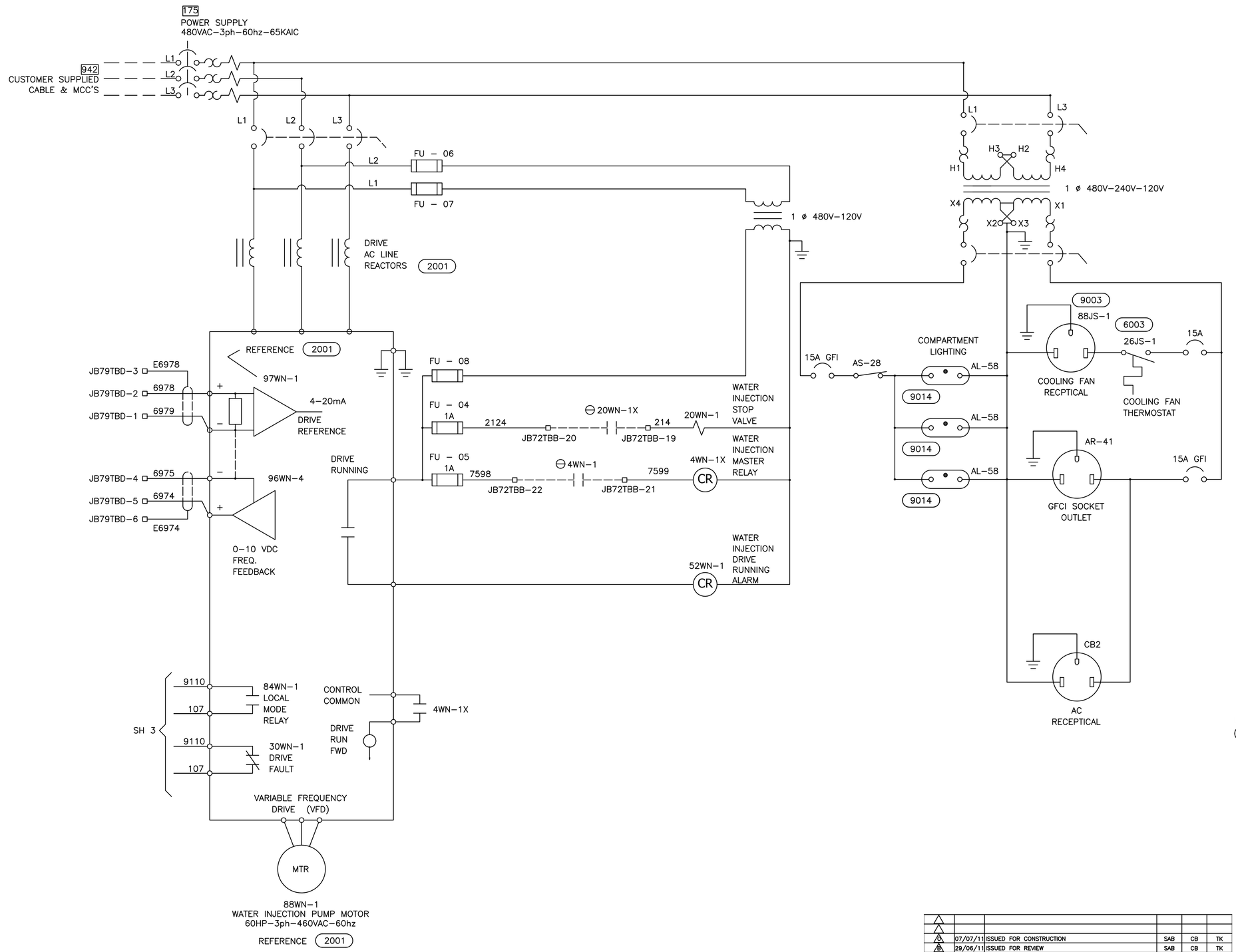

LEGEND:
(XXXX) REFERENCES ITEMS ON AGM–02–0204–PLA–P–0048 (SHEET–3 & 4) WATER INJECTION SKID P&ID

N° DE DOCUMENTO	DESCRIPCIÓN	REV.	FECHA
AGM–02–0204–PLA–E–0008	ONE LINE DIAGRAM		
AGM–02–0204–PLA–I–0046	DEVICE SUMMARY		
AGM–02–0204–PLA–E–0006	CABLE SUMMARY		
AGM–02–0204–PLA–E–0058	INTERCONNECTION WIRING DIAGRAM		

DOCUMENTOS DE REFERENCIA

REV.	FECHA	REVISIONES O MODIFICACIONES	DIBUJO	REVISO	APROBO
0	07/07/11	ISSUED FOR CONSTRUCTION	SAB	CB	TK
B	29/06/11	ISSUED FOR REVIEW	SAB	CB	TK
A	15/02/11	ISSUED FOR REVIEW	SAB	CB	TK

REF. FABRICANTE		
REF. FABRICANTE	FABRICANTE	O/C:

DERWICK ASSOCIATES CORP. | ProEnergy SERVICES | CORPOELEC | La Electricidad de Caracas | SENECA

AMPLIACIÓN DE LA CAPACIDAD DE GENERACIÓN Y TRANSPORTE DE ELECTRICIDAD EN LA ISLA DE MARGARITA

WATER INJECTION SKID
UNITS 298034 & 298035
ELECTRICAL

PLANO N°:	REV:		
PROYECTO N°: 409–2956–1			
CALCULO:	PROYECTO:	ESCALA: NONE	PLANO No: AGM–02–0204–PLA–E–0043
REVISADO: C. Brown	CALCULO:	FECHA: 07/07/11	
DIBUJO: S. Boerckel	REVISADO: J. Castillo	DISK. N°	
APROBADO: T. Koontz	DIBUJO:	ESC./PLOTEO:	
ARCHIVO:	APROBADO: M. Monticelli	ARCHIVO:	PAGINA: 2 DE: 4 — REV. 0

F_A1_11 – 841x594mm

N° PLANO: AGM-02-0204-PLA-E-0043 | 0

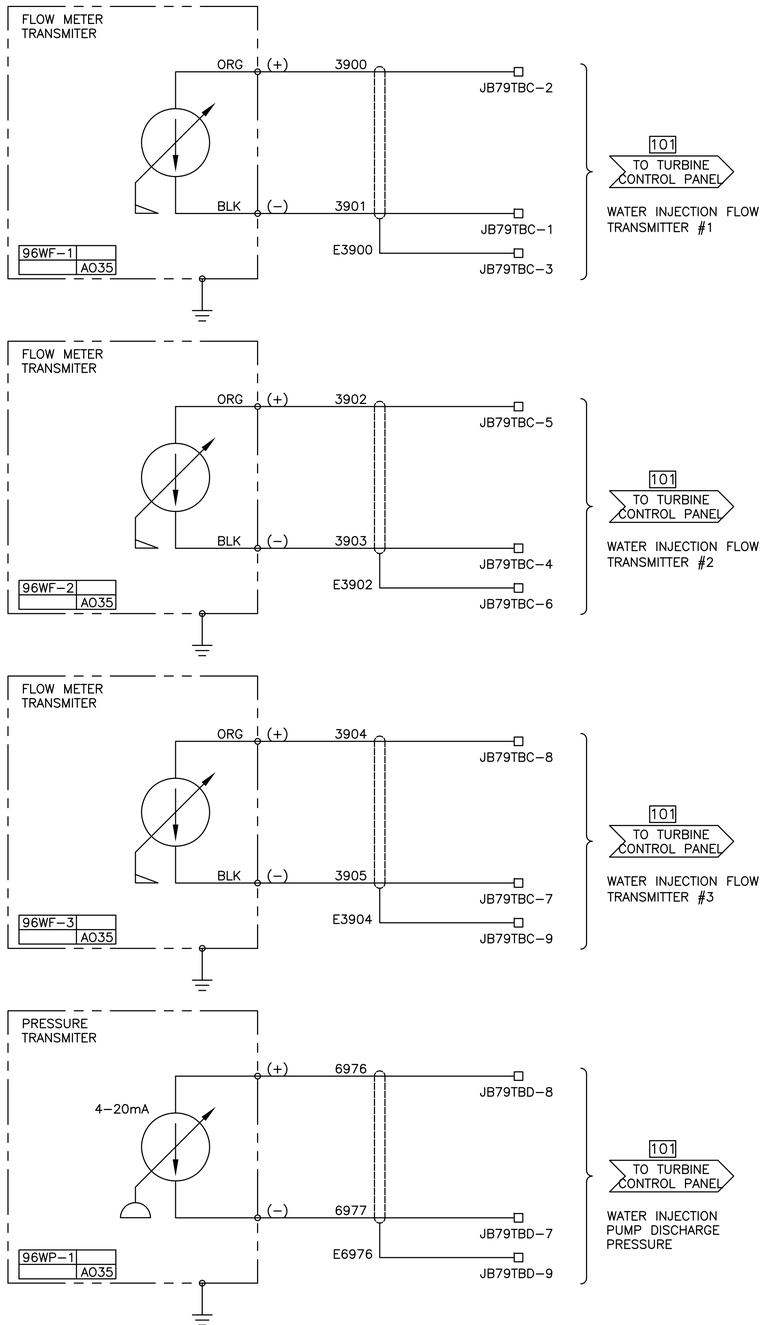

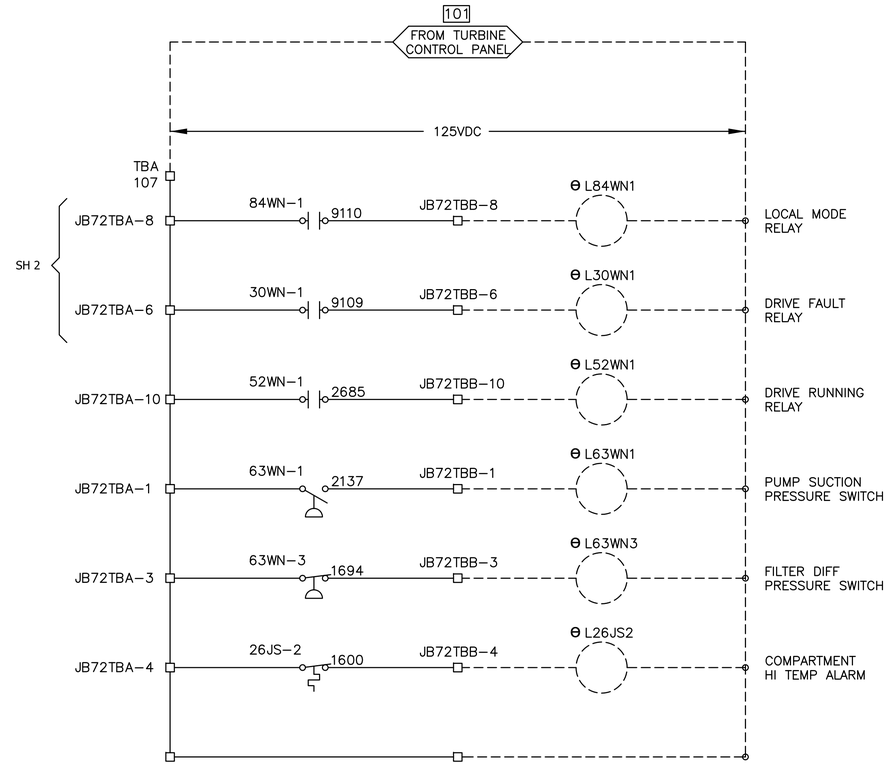

N° DE DOCUMENTO	DESCRIPCIÓN	REV.	FECHA
AGM-02-0204-PLA-E-0008	ONE LINE DIAGRAM		
AGM-02-0204-PLA-I-0046	DEVICE SUMMARY		
AGM-02-0204-PLA-E-0006	CABLE SUMMARY		
AGM-02-0204-PLA-E-0058	INTERCONNECTION WIRING DIAGRAM		

DOCUMENTOS DE REFERENCIA

REV.	FECHA	REVISIONES O MODIFICACIONES	DIBUJO	REVISO	APROBO
0	07/07/11	ISSUED FOR CONSTRUCTION	SAB	CB	TK
B	29/06/11	ISSUED FOR REVIEW	SAB	CB	TK
A	15/02/11	ISSUED FOR REVIEW	SAB	CB	TK

REF. FABRICANTE		
REF. FABRICANTE	FABRICANTE	O/C:

DERWICK ASSOCIATES CORP. | ProEnergy SERVICES | CORPOELEC | La Electricidad de Caracas | SENECA

AMPLIACIÓN DE LA CAPACIDAD DE GENERACIÓN Y TRANSPORTE DE ELECTRICIDAD EN LA ISLA DE MARGARITA

WATER INJECTION SKID
UNITS 298034 & 298035
ELECTRICAL

PLANO N°:	REV:		
PROYECTO N°: 409-2956-1			
CALCULO:	PROYECTO:	ESCALA: NONE	PLANO No: AGM-02-0204-PLA-E-0043
REVISADO: C. Brown	CALCULO:	FECHA: 07/07/11	
DIBUJO: S. Boerckel	REVISADO: J. Castillo	DISK. N°	
APROBADO: T. Koontz	DIBUJO:	ESC./PLOTEO:	
ARCHIVO:	APROBADO: M. Monticelli	ARCHIVO:	PAGINA: 3 DE: 4 — REV. 0

F_A1_11 - 841x594mm

N° PLANO: AGM-02-0204-PLA-E-0043 | 0

IMPORTANTE

ESTE PLANO FUE ELABORADO EN AUTOCAD V.2008
CUALQUIER MODIFICACION REALIZADA EN CAMPO DEBERA SER NOTIFICADO A LA UNIDAD RESPONSABLE.
QUEDA PROHIBIDO CORREGIR ESTE PLANO SIN AUTORIZACION DE ESTA UNIDAD.

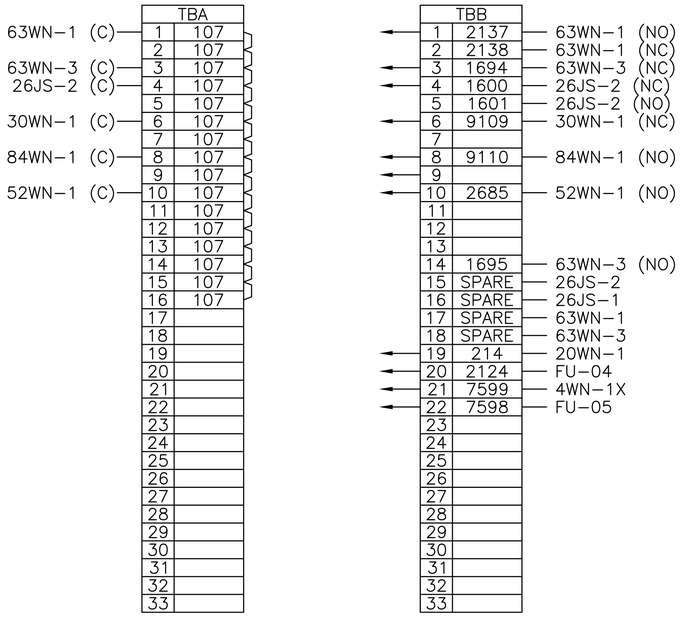

173
WATER INJECTION SKID
JB72 LEVEL-3

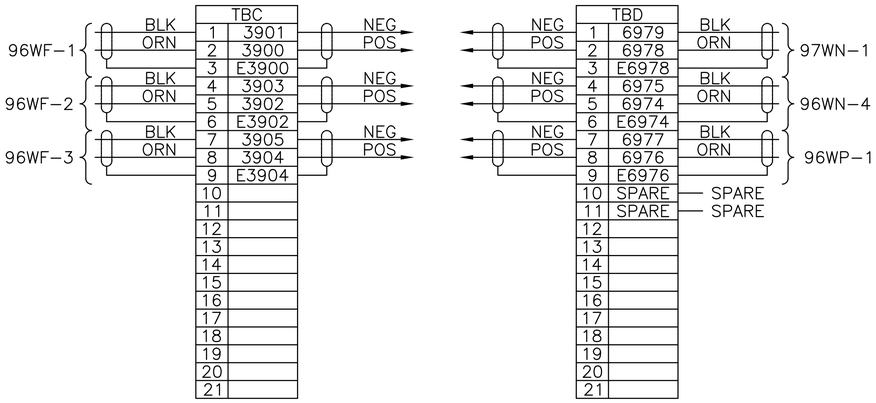

174
WATER INJECTION SKID
JB79 LEVEL-1 (LOW LEVEL)

REV.	FECHA	REVISIONES O MODIFICACIONES	DIBUJO	REVISO	APROBO
0	07/07/11	ISSUED FOR CONSTRUCTION	SAB	CB	TK
B	29/06/11	ISSUED FOR REVIEW	SAB	CB	TK
A	15/02/11	ISSUED FOR REVIEW	SAB	CB	TK

REF. FABRICANTE	
REF. FABRICANTE	FABRICANTE / O/C:

N° DE DOCUMENTO	DESCRIPCIÓN	REV.	FECHA
AGM-02-0204-PLA-E-0008	ONE LINE DIAGRAM		
AGM-02-0204-PLA-I-0046	DEVICE SUMMARY		
AGM-02-0204-PLA-E-0006	CABLE SUMMARY		
AGM-02-0204-PLA-E-0058	INTERCONNECTION WIRING DIAGRAM		

DOCUMENTOS DE REFERENCIA

DERWICK ASSOCIATES CORP. | ProEnergy SERVICES | CORPOELEC | La Electricidad de Caracas | GERENCIA FUNCIONAL DE INGENIERIA Y PROYECTOS SENECA

AMPLIACIÓN DE LA CAPACIDAD DE GENERACIÓN Y TRANSPORTE DE ELECTRICIDAD EN LA ISLA DE MARGARITA

WATER INJECTION SKID
UNITS 298034 & 298035
ELECTRICAL

PLANO N°: | REV:
PROYECTO N°: 409-2956-1

CALCULO:	PROYECTO:	ESCALA: NONE	PLANO No:
REVISADO: C. Brown	CALCULO:	FECHA: 07/07/11	AGM-02-0204-PLA-E-0043
DIBUJO: S. Boerckel	REVISADO: J. Castillo	DISK. N°	
APROBADO: T. Koontz	DIBUJO:	ESC./PLOTEO:	REV. 0
ARCHIVO:	APROBADO: M. Monticelli	ARCHIVO:	PAGINA: 4 DE: 4

F_A1_11 – 841x594mm

CORPOELEC CORPORACIÓN ELÉCTRICA NACIONAL	La Electricidad de Caracas	la nueva SENECA Iluminando el camino al Socialismo	DERWICK DERWICK ASSOCIATES CORP.

AMPLIACIÓN DE LA CAPACIDAD DE GENERACIÓN Y TRANSPORTE DE ELECTRICIDAD EN LA ISLA DE MARGARITA

SERVICIO DE ADECUACIÓN A SISTEMA DUAL DE DOS (2) UNIDADES, MARCA GENERAL ELECTRIC, MODELO 7001EA QUE SERÁN INSTALADAS EN LA PLANTA JUAN BAUTISTA ARISMENDI

INTERCONEXIÓN DIAGRAMA DE CABLEADO DE CONVERSIÓN DE COMBUSTIBLE DE DOBLE

AGM-02-0204-PLA-E-0058

Rev.	Fecha	Breve Descripción del Cambio	Total Pág.	Elab. por DERWICK	Rev. por DERWICK	Aprob. por EDC
0	05/08/2011	ISSUED FOR CONSTRUCTION	132	Domingo Guzmán	Iker Candina	

REVISADO POR DERWICK:	APROBADO POR DERWICK:	REVISADO POR EDC:	APROBADO POR EDC
FIRMA:	FIRMA:	FIRMA:	FIRMA:
NOMBRE: Domingo Guzmán	NOMBRE: Iker Candina	NOMBRE:	NOMBRE:

NOTES

1 SEE ML ITEM A108 FOR ARCNET INTERCONNECTIONS

2 FOR GUIDELINES ON GROUNDING OF EQUIPMENT, REFER TO MLI 0463 (CABLE SUMMARY).

3 POSITIONS ON CABLES THAT ARE LABELED “SP” ARE SPARES. A WIRE NUMBER SHOWN WITH AN “SP” (EX. “3155” SP) INDICATES THAT THE CABLE POSITIONS IS RESERVED FOR A STANDARD OPTION THAT IS NOT BEING USED ON THIS JOB.

4 FOR WIRING REQUIRED BETWEEN TURBINE OFF BASE JUNCTION BOXES AND TURBINE ON BASE JUNCTION BOXES, REFER TO MLI0470 (WIRE LIST, FIELD WIRING).

5 IF ADDICTIONAL CABLES ARE REQUIRED DURING SITE ASSEMBLY, TO ACCOMMODATE CUSTOMER SPECIFIC WIRING, USE THE NEXT AVAILABLE C400 SERIES CABLE NUMBERS.

6 CABLES PREFIXED WITH “CG” LISTED ON THE CABLE SUMMARY LIST ARE USED TO IDENTIFY EQUIPMENT REQUIRED TO BE GROUNDED TO THE STATION GROUND GRID. THE POINT-TO-POINT TERMINATION OF THESE CABLES ARE NOT SHOWN ON THE INTERCONNECTION. THEY ARE LISTED AS A REFERENCE ONLY.

7 SYSTEM PARAMETERS AND SPECIFICATIONS ARE BASED ON GE DRAWING 377A6050 (PROVIDED BY CUSTOMER). INCLUDING REQUIREMENTS FOR DUAL FUEL SYSTEMS PER CUSTOMER SCOPE OF WORK.

CABLE BLOCK LIST

LOC	**LOCATION DESCRIPTION**							
001	WELDING RECEPTACLE ONE							
	C408							
101	TURBINE CONTROL PANEL							
	C001	C006	C014	C017	C018	C037	C038	C039
	C041	C042	C073	C074	C076	C096	C128	C182
	C191	C193	C200	C201	C256	C257	C285	C414A
	C428	C473	C474	C512	C513A	C513B	C513C	C516A
	C516E	C517A	C517B	C517D	C517E	C531	C550A	C550B
	C550C	C550D	C551A	C551B	C551C	C553A	C553B	C554
	C590	C607	C615D	C667-1	C667-2	C667-3	C667-4	C671
	C678	C727	C819	C870	S875	S876	S877	S878
	S879	C880	S881	S882	C883	S891	S892	S893
	S894							
102	GENERATOR CONTROL PANEL							
	C049	C083	C235A	C235B	C236A	C236B	C236C	C417A
	C418A	C420A	C420B	C549	C610A	C610H	C610HA	C610V
	C611	C611A	C743					
108	AUXILIARY RELAY PANEL							
	C235C	C421	C421A	C421B	C421C	C422	C422A	C426
	C426A	C549A	C591	C593	C610B	C610C	C610D	C610E
	C610F	C610FA	C610FB	C610FC	C610J	C610W		
114	JB001 ACCESSORY BASE LOW LEVEL							
	C172	S876						
115	JB002 ACCESSORY BASE LEVEL 3							

CABLE BLOCK LIST

LOC LOCATION DESCRIPTION

C037 C161 C270 S875 S886

118 ACCESSORY BASE MOTORS
C027

119 ACCESSORY BASE
CG915

121 TURBINE BASE
CG914

122 TURBINE ROOF MOUNTED DEVICES
C199 C199A

125 JB055 TURBINE BASE LOW LEVEL
C117A

126 JB056 TURBINE BASE LOW LEVEL
C117B

127 JB085 LOAD GEAR COMPARTMENT LOW LEVEL
C117C

128 EXHAUST FRAME BLOWER 88TK-1
C071 C190 C191 CG964

129 EXHAUST FRAME FLOWER 88TK-2
C072 C192 C193 CG965

133 JB005C GENERATOR COMPARTMENT LEVEL 4
C059

CABLE BLOCK LIST

LOC	LOCATION DESCRIPTION							
134	GENERATOR COMPARTMENT							
	CG920							
135	JB005A GENERATOR COMPARTMENT LOW LEVEL							
	C017	C018	C076	C094B				
136	JB005B GENERATOR COMPARTMENT LEVEL 3							
	C001	C123	C219	C776	C777			
146	METALCLAD SWITCHGEAR							
	C049	C077	C080	C083	C148	C235A	C235B	C235C
	C236	C237	C428	C745A	CG907			
149	CRANKING MOTOR							
	C575							
151	JB215 GENERATOR FILTER SEQUENCER							
	C776	C777						
156	FUEL GAS FLOW DEVICES							
	C615D							
157	TURBINE AIR INLET FILTER COMPARTMENT							
	C513A	C513B	C513C	CG902				
158	GAS SCRUBBER							
	CG954							
161	COOLING WATER MODULE #1							

CABLE BLOCK LIST

LOC	**LOCATION DESCRIPTION**							
	CG910							
171	GAS FUEL (VALVE) MODULE							
	CG926							
172	AIR PROCESS SKID							
	CG929							
173	JB72 WATER INJECTION SKID LEVEL 3							
	S879							
174	JB79 WATER INJECTION SKID LEVEL 1							
	S877							
175	WATER INJECTION SKID 480 VOLT SUPPLY							
	C885							
176	LUBE OIL DEMISTER (TURBINE)							
	C671	C672	C672A	CG927				
182	MAIN TRANSFORMER							
	C406	C407	C409A	C409B	CG906			
183	AUXILIARY POWER TRANSFORMER							
	C401	C411	C415	C583	C584	C591	C593	C669
	C745B	CG931						

CABLE BLOCK LIST

LOC	**LOCATION DESCRIPTION**							
201	LIMIT AMP							
	C172	C575	C590	C596	C598	C743	C849	CG933
208	VIBRATION MONITOR PANEL							
	C117A	C117B	C117C	C145				
225	RELATIVE HUMIDITY SENSOR							
	C607	C607A						
227	HAZARDOUS GAS MONITOR							
	C022	C171						
230	JB019A TURBINE OFF BASE RACK LEVEL 2							
	C042	C256	CG1031					
231	JB019B TURBINE OFF BASE RACK LEVEL 3							
	C128	C182	C257	CG1032	S882			
233	JB020A TURBINE OFF BASE RACK LOW LEVEL							
	C039	C041	C200	CG1033				
234	JB020B TURBINE OFF BASE RACK LOW LEVEL							
	C009A	C009B	C038	C171	CG1034			
236	TURBINE ROOF LOW LEVEL							
	S878							
252	WATER WASH SKID							
	C669	CG928						

CABLE BLOCK LIST

LOC LOCATION DESCRIPTION

254 CUSTOMER DEVICES--PANELS

C401	C410A	C410B	C420A	C420B	C426	C426A	C549
C549A	C550A	C550B	C550C	C550D	C551A	C551B	C551C
C553A	C553B	C554	C610A	C610B	C610C	C610D	C610E
C610F	C610FA	C610FB	C610FC	C610H	C610HA	C610J	C610V
C610W	C611	C611A	CH1007				

257 JB037 PERFORMANCE MONITORING LOW LEVEL

C678

280 GENERATOR NEUTRAL ACCESSORY COMPARTMENT GNAC

CG1051

283 FIRE PROTECTION DEVICES

CG983

284 FIRE PROTECTION PANEL

C135 C136 C870 C871 C872 C874

325 JB163 GENERATOR COMPARTMENT LOW LEVEL

C145

329 CRANKING MOTOR TRANSFORMER

C598 C745A C745B

333 PACKAGED ELECTRICAL-ELECTRONIC CONTROL CENTER-PEECC

CG1008

CABLE BLOCK LIST

LOC LOCATION DESCRIPTION

334 PEECC MOTOR CONTROL CENTER

C012	C013C	C027	C028	C055A	C055B	C059	C071
C072	C077	C102	C125	C149	C199	C237	C251
C402	C403	C404	C406	C407	C408	C409A	C409B
C410A	C410B	C480	C481	C533	C534	C535	C537
C538	C583	C584	C596	C672	C809	C817	

335 BUS DUCT

C080 CG1059

338 CUSTOMER 480V SUPPLY

C415

339 JB298 PEECC LEVEL 3

C161	C190	C192	C199A	C216	C217	C219	C249
C270	C515	C532	C544	C607A	C672A	C725	C809A
C817A	C849	C871	C872	C874			

348 JB077A ACCESSORY BASE FP

C135 C136

363 JB130 GAS FUEL MODULE

C006 C014 C022 C096 C216 C217 C285

381 JB021A TURBINE OFF BASE RACK LEVEL 4

C055A C055B CG1038

387 JB020G TURBINE COMPARTMENT LOW LEVEL

C073 C074 C473 C474

CABLE BLOCK LIST

LOC LOCATION DESCRIPTION

390 JB034 TURBINE ROOF LOW LEVEL
C201

392 JB004 ACCESSORY BASE LEVEL 4
C012 C013C C028 C102 C125 C251 S884

427 LIQUID FUEL FORWARDING SKID LF-JB-1
S893 S894

428 JB090 COOLING WATER MODULE LEVEL 3
C531 C532 C544

429 88AB-1 MCC CUBICLE
S881 S884 S886

430 DEMIN WATER FORWARDING PF-JB-1
S891 S892

438 JB090A COOLING WATER MODULE LEVEL 4
C533 C534 C535 C537 C538

441 JB131 GAS FUEL MODULE LEVEL 4
C149 C809 C809A C817 C817A

447 INLET HEATING CONTROL VALVE
C516A C517A C517B C517D C517E

449 JB078 TURB. AIR INLET FILTER COMPARTMENT
C512 C515

CABLE BLOCK LIST

LOC LOCATION DESCRIPTION

455 JB297 AIR PROCESS SKID LEVEL3
C725 C727

456 JB010 WATER WASH SKID LEVEL 3
C667-1 C667-2 C667-3 C667-4

514 CUSTOMER SWITCHGEAR
C480 C481

562 STATIC VOLTAGE REGULATOR—EX2000R
C094B C123 C148

563 JB386 GAS SCRUBBER LEVEL 3
C819

581 JB005N GEN. NEUTRAL ACCESSORIES COMP. LEVEL 3
C236A C236B C249

611 INLET HEATING ISOLATION VALVE
C516E

622 FUEL GAS HEATER CONTROL PANEL
C411 C413 C414 C414A

742 SITE LIGHTS
C403

751 FLAME DETECTOR INTERFACE MODULE PRIMARY
C009A

CABLE BLOCK LIST

LOC	**LOCATION DESCRIPTION**							
752	FLAME DETECTOR INTERFACE MODULE SECONDARY							
	C009B							
753	JB309 FUEL GAS HEATING SKID LEVEL 3							
	C413	C414	C414A					
901	CUSTOMER GROUND GRID							
	CG1007	CG1008	CG1031	CG1032	CG1033	CG1034	CG1038	CG1051
	CG1059	CG902	CG906	CG907	CG910	CG914	CG915	CG920
	CG926	CG927	CG928	CG929	CG931	CG933	CG954	CG964
	CG965	CG983						
938	CEMS SYSTEM							
	C404							
939	UNIT AREA OUTDOOR LIGHTING							
	C402							
940	DEMIN WATER FORWARDING PF-JB-2							
	C889	C890						
941	LIQUID FUEL FORWARDING LF-JB-2							
	C887	C888						
942	CUSTOMER SUPPLIED MCC							
	C883	C880	C887	C888	C889	C890		

CABLE: C001 CONNECTS: 101 TURBINE CONTROL PANEL
136 JB005B GENERATOR COMPARTMENT LEVEL 3

FROM LOCATION 101			CABLE		DEVICE			TO LOCATION 136		
INT LOC	TERM BD	TERM	PIN	COND	WIRE #	DEVICE	DESC	INT LOC	TERM BD	TERM
<CD>	DTBA	001	0 1	0 1 BLK	4031	33GC-2	NC		TBB	016
<CD>	DTBA	002	0 2	0 2 BLK	4032	33GC-3	NC		TBB	018
			0 3	0 3 BLK	SP					
			0 4	0 4 BLK	SP					
<QD1>	DTBB	041	0 5	0 5 BLK	6809	33GC-1A	NO		TBB	009
<QD1>	DTBB	069	0 6	0 6 BLK	6810	33GC-1B	NO		TBB	011
<CD>	DTBA	081	0 7	0 7 BLK	6811	33GC-1C	NO		TBB	013
<QD1>	DTBB	005	0 8	0 8 BLK	7629	63BQ	NO		TBB	003
			0 9	0 9 BLK	SP					
			10	10 BLK	SP					
			11	11 BLK	SP					
			12	12 BLK	SP					
			13	13 BLK	SP					
			14	14 BLK	SP					
			15	15 BLK	SP					
<QD1>	DTBB	009	16	16 BLK	1692	71WG-1	NC		TBA	031
<QD1>	DTBB	013	17	17 BLK	654	63QT-2A	NO1		TBA	001
<QD1>	DTBB	043	18	18 BLK	2266	63QT-2B	NO1		TBA	004
<QD1>	DTBB	014	19	19 BLK	107	P125VDC	COM		TBA	036

NOTES FOR CABLE C001

NUMBER NOTES

1 CONDUCTOR 19 (107) IS THE COMMON FOR THE SIGNALS ON CUDUCTORS 01 AND 02, & 05 THRU 08, &16 THRU. 18.

2 ADD THE FOLLOWING JUMPERS IN (136) JB005B GENERATOR COMPARTMEN LEVEL 3:

TBB-(016) TO TBB-(014) TBB-(002) TO TBA-(002) TBA-(002) TO TBA-(003)
TBA-(036) TO TBA-(030) TBA-(030) TO TBB-(017) TBB-(014) TO TBB-(012)
TBB-(012) TO TBB-(010) TBB-(010) TO TBB-(002) TBB-(016) TO TBB-(017)

CABLE:C006 CONNECTS: 101 TURBINE CONTROL PANEL
363 JB130 GAS FUEL MODULE

FROM LOCATION 101			CABLE		DEVICE			TO LOCATION 363		
INT LOC	TERM BD	TERM	PIN	COND	WIRE #	DEVICE	DESC	INT LOC	TERM BD	TERM
<R>	SHD	COM		0 1 SHD	E2552	96FG-1	SHD			003
<R>	TBQC	038	0 1	0 1 ORN	2552	96FG-1	BLK			001
<R>	TBQC	039	0 2	0 1 BLK	2553	96FG-1	WHT			002
				0 2 SHD			SHD			
			0 3	0 2 ORN	SP					
			0 4	0 2 BLK	SP					
<S>	SHD	COM		0 3 SHD	E8658	96SR-2	SHD		TBD	0 0 9
<S>	QTBA	001	0 5	0 3 ORN	8658	96SR-2	RED		TBD	0 0 7
<S>	QTBA	002	0 6	0 3 BLK	8659	96SR-2	BLK		TBD	0 0 8
<R>	SHD	COM		0 4 SHD	E2366	96SR-2	SHD		TBD	0 1 2
<R>	TBQC	003	0 7	0 4 ORN	2366	96SR-2	BLU		TBD	0 1 0
<R>	TBQC	004	0 8	0 5 BLK	2367	96SR-2	YEL		TBD	0 1 1
<R>	SHD	COM		0 5 SHD	E8316	96FG-4	SHD		TBD	0 1 5
<R>	TBQC	041	0 9	0 5 ORN	8316	96FG-4	BLK		TBD	0 1 3
<R>	TBQC	042	10	0 5 BLK	8317	96FG-4	WHT		TBD	0 1 4
<R>	SHD	COM		0 6 SHD	E2376	96FG-2C	SHD		TBD	0 1 8
<R>	TBQB	033	11	0 6 ORN	2376	96FG-2C	BLK		TBD	0 1 6
<R>	TBQB	031	12	0 6 BLK	2377	96FG-2C	WHT		TBD	0 1 7
<R>	SHD	COM		0 7 SHD	E3896	96FG-5	SHD		TBD	0 2 1
<R>	TBQC	045	13	0 7 ORN	3896	96FG-5	BLK		TBD	0 1 9
<R>	TBQC	046	14	0 7 BLK	3897	96FG-5	WHT		TBD	0 2 0
<R>	SHD	COM		0 8 SHD	E2372	96FG-2B	SHD		TBD	0 2 4
<R>	TBQB	029	15	0 8 ORN	2373	96FG-2B	BLK		TBD	0 2 2
<R>	TBQB	027	16	0 8 BLK	2372	96FG-2B	WHT		TBD	0 2 3
<R>	SHD	COM		0 9 SHD	E8269	96FG-6	SHD		TBD	0 2 7
<R>	TBQC	047	17	0 9 ORN	8269	96FG-6	BLK		TBD	0 2 5
<R>	TBQC	048	18	0 9 BLK	8270	96FG-6	WHT		TBD	0 2 6
<R>	SHD	COM		10 SHD	E394	96FG-2A	SHD		TBD	0 3 0
<R>	TBQB	024	19	10 ORN	395	96FG-2A	BLK		TBD	0 2 8
<R>	TBQB	023	20	10 BLK	394	96FG-2A	WHT		TBD	0 2 9
<T>	SHD	COM		11 SHD	E8376	96GC-1	SHD		TBD	0 3 3
<T>	QTBA	001	21	11 ORN	8376	96GC-1	RED		TBD	0 3 1
<T>	QTBA	002	22	11 BLK	8377	96GC-1	BLK		TBD	0 3 2
<R>	SHD	COM		12 SHD	E344	96GC-1	SHD		TBD	0 3 6
<R>	TBQC	005	23	12 ORN	344	96GC-1	BLU		TBD	0 3 4
<R>	TBQC	006	24	12 BLK	345	96GC-1	YEL		TBD	0 3 5

CABLE:C006 CONNECTS: 101 TURBINE CONTROL PANEL
363 JB130 GAS FUEL MODULE

FROM LOCATION 101			CABLE		DEVICE			TO LOCATION 363		
INT LOC	TERM BD	TERM	PIN	COND	WIRE #	DEVICE	DESC	INT LOC	TERM BD	TERM
<R>	SHD	COM		13 SHD	E8656	96SR-1	SHD		TBE	0 0 3
<R>	QTBA	001	25	13 ORN	8656	96SR-1	RED		TBE	0 0 1
<R>	QTBA	002	26	13 BLK	8657	96SR-1	BLK		TBE	0 0 2
<R>	SHD	COM		14 SHD	E352	96SR-1	SHD		TBE	0 0 6
<R>	TBQC	001	27	14 ORN	352	96SR-1	BLU		TBE	0 0 4
<R>	TBQC	002	28	14 BLK	353	96SR-1	YEL		TBE	0 0 5
<R>	SHD	COM		15 SHD	E354	90SR-1	SHD		TBE	0 0 9
<R>	QTBA	029	29	15ORN	355	90SR-1	YEL		TBE	0 0 7
<R>	QTBA	027	30	15BLK	354	90SR-1	GRN		TBE	0 0 8
<S>	SHD	COM		16 SHD	E356	90SR-1	SHD		TBE	0 1 2
<S>	QTBA	029	31	16 ORN	357	90SR-1	RED		TBE	0 1 0
<S>	QTBA	027	32	16 BLK	356	90SR-1	WHT		TBE	0 1 1
<R>	SHD	COM		17 SHD	E348	65GC-1	SHD		TBE	0 1 5
<R>	QTBA	032	33	17 ORN	349	65GC-1	YEL		TBE	0 1 3
<R>	QTBA	030	34	17 BLK	348	65GC-1	GRN		TBE	0 1 4
<S>	SHD	COM		18 SHD	E350	65GC-1	SHD		TBE	0 1 8
<S>	QTBA	032	35	18 ORN	351	65GC-1	RED		TBE	0 1 6
<S>	QTBA	030	36	18 BLK	350	65GC-1	WHT		TBE	0 1 7

CABLE: C009A CONNECTS: 234 JB020B TURBINE OFF BASE RACK LOW LEVEL
751 FLAME DETECTOR INTERFACE MODULE PRIMARY

FROM LOCATION 234			CABLE		DEVICE			TO LOCATION 751		
INT LOC	TERM BD	TERM	PIN	COND	WIRE #	DEVICE	DESC	INT LOC	TERM BD	TERM
	TBG	004		0 1 SHD	E5168	28FD-3P	SHD		FSTB-1	006
	TBG	001	0 1	0 1 ORN	5168	28FD-3P	YEL		FSTB-1	004
	TBG	002	0 2	0 1 BLK	5169	28FD-3P	WHT		FSTB-1	005
	TBG	008		O 2 SHD	E7271	28FD-4P	SHD		FSTB-1	003
	TBG	005	0 3	0 2 ORN	7272	28FD-4P	YEL		FSTB-1	001
	TBG	006	0 4	0 2 BLK	7271	28FD-4P	WHT		FSTB-1	002
	TBG	012		0 3 SHD	E194	28FD-7P	SHD		FSTB-1	009
	TBG	009	0 5	0 3 ORN	194	28FD-7P	YEL		FSTB-1	007
	TBG	010	0 6	0 3 BLK	195	28FD-7P	WHT		FSTB-1	008
	TBG	016		0 4 SHD	E196	28FD-8P	SHD		FSTB-1	012
	TBG	013	0 7	0 4 ORN	196	28FD-8P	YEL		FSTB-1	010
	TBG	014	0 8	0 4 BLK	197	28FD-8P	WHT		FSTB-1	011

CABLE: C009B CONNECTS: 234 JB020B TURBINE OFF BASE RACK LOW LEVEL
752 FLAME DETECTOR INTERFACE MODULE SECONDARY

FROM LOCATION 234			CABLE		DEVICE			TO LOCATION 752		
INT LOC	TERM BD	TERM	PIN	COND	WIRE #	DEVICE	DESC	INT LOC	TERM BD	TERM
	TBH	004		0 1 SHD	E5153	28FD-3S	SHD		FSTB-2	006
	TBH	001	0 1	0 1 ORN	5154	28FD-3S	YEL		FSTB-2	004
	TBH	002	0 2	0 1 BLK	5153	28FD-3S	WHT		FSTB-2	005
	TBH	008		0 2 SHD	E5170	28FD-4S	SHD		FSTB-2	003
	TBH	005	0 3	0 2 ORN	5170	28FD-4S	YEL		FSTB-2	001
	TBH	006	0 4	0 2 BLK	5171	28FD-4S	WHT		FSTB-2	002
	TBH	012		0 3 SHD	E5147	28FD-7S	SHD		FSTB-2	009
	TBH	009	0 5	0 3 ORN	5148	28FD-7S	YEL		FSTB-2	007
	TBH	010	0 6	0 3 BLK	5147	28FD-7S	WHT		FSTB-2	008
	TBH	016		0 4 SHD	E5149	28FD-8S	SHD		FSTB-2	012
	TBH	013	0 7	0 4 ORN	5150	28FD-8S	YEL		FSTB-2	010
	TBH	014	0 8	0 4 BLK	5149	28FD-8S	WHT		FSTB-2	011

CABLE: C012 CONNECTS: 334 PEECC MOTOR CONTROL CENTER
392 JB004 ACCESSORY BASE LEVEL 4

FROM LOCATION 334			CABLE		DEVICE			TO LOCATION 392		
INT LOC	TERM BD	TERM	PIN	COND	WIRE #	DEVICE	DESC	INT LOC	TERM BD	TERM
DD MCC	QE1-TB	F2	0 1	0 1 BLK	950	88QE-1	F2		TBUU	0 0 1
DD MCC	QE1-TB	A2	0 2	0 2 BLK	951	88QE-1	A2		TBUU	0 0 2
DD MCC	QE1-TB	A1	0 3	0 3 BLK	949	88QE-1	A1		TBUU	0 0 3

CABLE: C013C CONNECTS: 334 PEECC MOTOR CONTROL CENTER
392 JB004 ACCESSORY BASE LEVEL 4

FROM LOCATION 334			CABLE		DEVICE			TO LOCATION 392		
INT LOC	TERM BD	TERM	PIN	COND	WIRE #	DEVICE	DESC	INT LOC	TERM BD	TERM
MCC2	TM1-TB	T1	0 1	0 1 BLK	T1-TM1	88TM-1	U1		TBVV	0 1 0
MCC2	TM1-TB	T2	0 2	0 2 BLK	T2-TM1	88TM-1	V1		TBVV	0 1 1
MCC2	TM1-TB	T3	0 3	0 3 BLK	T3-TM1	88TM-1	W1		TBVV	0 1 2

CABLE: C014 CONNECTS: 101 TURBINE CONTROL PANEL
363 JB130 GAS FUEL MODULE

FROM LOCATION 101			CABLE		DEVICE			TO LOCATION 363		
INT LOC	TERM BD	TERM	PIN	COND	WIRE #	DEVICE	DESC	INT LOC	TERM BD	TERM
			0 1	0 1 BLK	SP					
<QD1>	DTBA	033	0 2	0 2 BLK	5155	33PG-5	NO		TBA	007
<QD1>	DTBA	035	0 3	0 3 BLK	5157	33PG-6	NO		TBA	010
<QD1>	DTBA	047	0 4	0 4 BLK	5156	33PG-7	NO		TBA	009
<QD1>	DTBA	091	0 5	0 5 BLK	5158	33PG-8	NO		TBA	012
<CD>	DTBA	059	0 6	0 6 BLK	2669	63VL-3	NO		TBA	013
<CD>	DTBB	007	0 7	0 7 BLK	6873	63VL-5	NO		TBA	014
<QD2>	DTBA	023	0 8	0 8 BLK	7610	63PG-1	NO		TBA	021
<QD2>	DTBA	025	0 9	0 9 BLK	7611	63PG-2	NO		TBA	022
<QD1>	DTBA	045	1 0	1 0 BLK	631	63HG-2	NO		TBA	017
<QD1>	DTBA	043	1 1	1 1 BLK	131	63HG-1	NO		TBA	018
<QD1>	DTBB	063	1 2	1 2 BLK	123	63HG-3	NO		TBA	019
<QD1>	DTBA	017	1 3	1 3 BLK	7642	63HG-2	NC		TBA	020
<QD2>	DTBA	057	1 4	1 4 BLK	126	33PG-1	NO		TBA	001
<QD2>	DTBA	059	1 5	1 5 BLK	127	33PG-2	NO		TBA	002
<CD>	DTBB	017	1 6	1 6 BLK	6632	63VL-4	NO		TBA	023
<CD>	DTBA	049	1 7	1 7 BLK	6197	26VS-1	NC		TBA	024
<P>	DTBA	059	1 8	1 8 BLK	224	20FG-1	0 1		TBA	025
<P>	DTBA	060	1 9	1 9 BLK	225	20FG-1	0 2		TBA	026
<QD2>	DTBA	061	2 0	2 0 BLK	128	33PG-3	NO		TBA	003
<QD2>	DTBA	063	2 1	2 1 RED	129	33PG-4	NO		TBA	004
<QD1>	DTBA	023	2 2	2 2 RED	6266	20PG-3	0 1		TBA	029
<QD1>	DTBA	041	2 3	2 3 RED	6267	20PG-4	0 1		TBA	030
<QD1>	DTBC	022	2 4	2 4 RED	298	20VG-1	0 1		TBA	031
<QD2>	DTBC	034	2 5	2 5 RED	257	20PG-1	0 1		TBA	027
<QD2>	DTBC	038	2 6	2 6 RED	276	20PG-2	0 1		TBA	028
<QD2>	DTBC	042	2 7	2 7 RED	7216	20VG-2	0 1		TBA	035
			2 8	2 8 RED	SP					
<QD1>	DTBC	030	2 9	2 9 RED	3297	20VG-3	0 1		TBA	036
<QD1>	DTBC	021	3 0	3 0 RED	108	V125VDC	COM		TBC	001
<CD>	DTBA	050	3 1	3 1 RED	107	P125VDC	COM		TBB	020
			3 2	3 2 RED	SP					
			3 3	3 3 RED	SP					
			3 4	3 4 RED	SP					

CABLE: C014 CONNECTS: 101 TURBINE CONTROL PANEL
363 JB130 GAS FUEL MODULE

FROM LOCATION 101			CABLE		DEVICE			TO LOCATION 363		
INT LOC	TERM BD	TERM	PIN	COND	WIRE #	DEVICE	DESC	INT LOC	TERM BD	TERM
			3 5	3 5 RED	SP					
			3 6	3 6 RED	SP					
			3 7	37 RED	SP					

NOTES FOR CABLE C014

NUMBER	NOTES
1	CONDUCTOR 31 (107) IS THE COMMOM FOR THE SIGNALS ON CONDUCTORS 02- THRU 08, 10 THRU 23.
2	CONDUCTOR 30 (108) IS THE COMMON FOR THE SIGNALS ON CONDUCTORS 24 AND 29.

CABLE: C017 CONNECTS: 101 TURBINE CONTROL PANEL
135 JB005A GENERATOR COMPARTMENT LOW LEVEL

FROM LOCATION 101			CABLE		DEVICE			TO LOCATION 135		
INT LOC	TERM BD	TERM	PIN	COND	WIRE #	DEVICE	DESC	INT LOC	TERM BD	TERM
				0 1 SHD			SHD			
			0 1	0 2 ORN	SP					
			0 2	0 1 BLK	SP					
<C>	SHD	COM		0 2 SHD	E772	DT-GAS-6	SHD		TBB	005
<C>	TBCA	016	0 3	0 2 ORN	772	DT-GAS-6	WHT		TBB	002
<C>	TBCA	018	0 4	0 2 BLK	773	DT-GAS-6	BLU		TBB	003
<C>	SHD	COM		0 3 SHD	E778	DT-GSF-1	SHD		TBA	005
<C>	TBCA	003	0 5	0 3 ORN	778	DT-GSF-1	WHT		TBA	002
<C>	TBCA	001	0 6	0 3 BLK	779	DT-GSF-1	BLU		TBA	003
<C>	SHD	COM		0 4 SHD	E780	DT-GSF-2	SHD		TBA	015
<C>	TBCA	006	0 7	0 4 ORN	780	DT-GSF-2	WHT		TBA	012
<C>	TBCA	004	0 8	0 4 BLK	781	DT-GSF-2	BLU		TBA	013
<C>	SHD	COM		0 5 SHD	E782	DT-GSF-3	SHD		TBA	025
<C>	TBCA	009	0 9	0 5 ORN	782	DT-GSF-3	WHT		TBA	022
<C>	TBCA	007	1 0	0 5 BLK	783	DT-GSF-3	BLU		TBA	023
<C>	SHD	COM		0 6 SHD	E784	DT-GSF-4	SHD		TBA	035
<C>	TBCA	012	1 1	0 6 ORN	784	DT-GSF-4	WHT		TBA	032
<C>	TBCA	010	1 2	0 6 BLK	785	DT-GSF-4	BLU		TBA	033
<C>	SHD	COM		0 7 SHD	E786	DT-GSF-5	SHD		TBA	045
<C>	TBCA	015	1 3	0 7 ORN	786	DT-GSF-5	WHT		TBA	042
<C>	TBCA	013	1 4	0 7 BLK	787	DT-GSF-5	BLU		TBA	043

CABLE: C017 CONNECTS: 101 TURBINE CONTROL PANEL
135 JB005A GENERATOR COMPARTMENT LOW LEVEL

FROM LOCATION 101			CABLE		DEVICE			TO LOCATION 135		
INT LOC	TERM BD	TERM	PIN	COND	WIRE #	DEVICE	DESC	INT LOC	TERM BD	TERM
				0 8 SHD			SHD			
			1 5	0 8 ORN	SP					
			1 6	0 8 BLK	SP					
				0 9 SHD			SHD			
			1 7	0 9 ORN	SP					
			1 8	0 9 BLK	SP					
<C>	SHD	COM		10 SHD	E774-1	RTD_GND	SHD			
<C>	TBCA	002	1 9	10 ORN	774-1	RTD_GND	GND		TBB	004
<C>	TBCA	026	2 0	10 BLK	774-2	RTD_GND	GND		TBC	004
				11 SHD			SHD			
			2 1	11 ORN	SP					
			2 2	11 BLK	SP					
<C>	SHD	COM		12 SHD	E794	DT-GGC-10	SHD		TBC	025
<C>	TBCA	021	2 3	12 ORN	794	DT-GGC-10	WHT		TBC	022
<C>	TBCA	019	2 4	12 BLK	795	DT-GGC-10	BLU		TBC	023
<C>	SHD	COM		13 SHD	E796	DT-GGC-11	SHD		TBC	030
<C>	TBCA	024	2 5	13 ORN	796	DT-GGC-11	WHT		TBC	027
<C>	TBCA	022	2 6	13 BLK	797	DT-GGC-11	BLU		TBC	028
<C>	SHD	COM		14 SHD	E1780	DT-GGH-18	SHD		TBC	035
<C>	TBCA	027	2 7	14 ORN	1780	DT-GGH-18	WHT		TBC	032
<C>	TBCA	025	2 8	14 BLK	1781	DT-GGH-18	BLU		TBC	033
<C>	SHD	COM		15 SHD	E1782	DT-GGH-19	SHD		TBC	040
<C>	TBCA	030	2 9	15 ORN	1782	DT-GGH-19	WHT		TBC	037
<C>	TBCA	028	3 0	15 BLK	14783	DT-GGH-19	BLU		TBC	038
				16 SHD			SHD			
			3 1	16 ORN	SP					
			3 2	16 BLK	SP					
				17 SHD			SHD			
			3 3	17 ORN	SP					
			3 4	17 BLK	SP					
				18 SHD			SHD			
			3 5	18 ORN	SP					
			3 6	18 BLK	SP					

CABLE: C018 CONNECTS 101 TURBINE CONTROL PANEL
135 JB005A GENERATOR COMPARTMENT LOW LEVEL

FROM LOCATION 101			CABLE		DEVICE			TO LOCATION 135		
INT LOC	TERM BD	TERM	PIN	CORD	WIRE #	DEVICE	DESC	INT LOC	TERM BD	TERM
			0 1	0 1 YEL	SP					
			0 2	0 1 RED	SP					
			0 3	0 2 YEL	SP					
			0 4	0 2 RED	SP					
<C>	TBQA	055	0 5	0 3 YEL	485	LT-G2D-1A	YEL		TBE	012
<C>	TBQA	056	0 6	0 3 RED	486	LT-G2D-1A	RED		TBE	013
<C>	TBQA	053	0 7	0 4 YEL	1417	LT-G1D-1A	YEL		TBE	002
<C>	TBQA	054	0 8	0 4 RED	1418	LT-G1D-1A	RED		TBE	003
			0 9	0 5 YEL	SP					
			1 0	0 5 RED	SP					
<C>	TBQA	077	1 1	0 6 YEL	5457	BT-GJ2-2A	YEL		TBE	052
<C>	TBQA	078	1 2	0 6 RED	5458	BT-GJ2-2A	RED		TBE	053
<C>	TBQA	051	1 3	0 7 YEL	5459	BT-GJ1-2A	YEL		TBE	032
<C>	TBQA	052	1 4	0 7 RED	5460	BT-GJ1-2A	RED		TBE	033
<C>	TBQA	083	1 5	0 8 YEL	2479	BT-GJ2-1A	YEL		TBE	042
<C>	TBQA	084	1 6	0 8 RED	2480	BT-GJ2-1A	RED		TBE	043
<C>	TBQA	081	1 7	0 9 YEL	2477	BT-GJ1-1A	YEL		TBE	022
<C>	TBQA	082	1 8	0 9 RED	2478	BT-GJ1-1A	RED		TBE	023

CABLE: C022 CONNECTS: 227 HAZARDOUS GAS MONITOR
363 JB130 GAS FUEL MODULE

FROM LOCATION 227			CABLE		DEVICE			TO LOCATION 363		
INT LOC	TERM BD	TERM	PIN	COND	WIRE #	DEVICE	DESC	INT LOC	TERM BD	TERM
	TBW	004		0 1 SHD	E7039	45HA-7	SHD		TBG	004
	TBW	003	0 1	0 1 ORN	7039	45HA-7	WHT		TBG	003
	TBW	001	0 2	0 1 BLK	7041	45HA-7	BLK		TBG	001
	TBW	002	0 3	0 1 RED	7040	45HA-7	RED		TBG	002
	TBW	008		0 2 SHD	E7042	45HA-8	SHE		TBG	008
	TBW	007	0 4	0 2 ORN	7042	45HA-8	WHT		TBG	007
	TBW	005	0 5	0 2BLK	7044	45HA-8	BLK		TBG	005
	TBW	006	0 6	0 2 RED	7043	45HA-8	RED		TBG	006
				0 3 SHD			SHD			
			0 7	0 3 ORN	SP					
			0 8	0 3 BLK	SP					
			0 9	0 3 RED	SP					

CABLE: C027 CONNECTS: 118 ACCESSORY BASE MOTORS
334 PEECC MOTOR CONTROL CENTER

FROM LOCATION 118			CABLE		DEVICE			TO LOCATION 334		
INT LOC	TERM BD	TERM	PIN	COND	WIRE #	DEVICE	DESC	INT LOC	TERM BD	TERM
	88QA-1	T1	0 1	0 1 BLK	T1-QA1	88QA-1	T1	MCC2	QA1-TB	T1
	88QA-1	T2	0 2	0 2 BLK	T2-QA1	88QA-1	T2	MCC2	QA1-TB	T2
	88QA-1	T3	0 3	0 3 BLK	T3-QA1	88QA-1	T3	MCC2	QA1-TB	T3

CABLE: C028 CONNECTS: 334 PEECC MOTOR CONTROL CENTER
392 JB004 ACCESSORY BASE LEVEL 4

FROM LOCATION 334			CABLE		DEVICE			TO LOCATION 392		
INT LOC	TERM BD	TERM	PIN	COND	WIRE #	DEVICE	DESC	INT LOC	TERM BD	TERM
MCC2	HQ1-TB	T1	0 1	0 1 BLK	T1-HQ1	88HQ-1	T1		TBVV	0 0 7
MCC2	HQ1-TB	T2	0 2	0 2 BLK	T2-HQ1	88HQ-1	T2		TBVV	0 0 8
MCC2	HQ1-TB	T3	0 3	0 3 BLK	T3-HQ1	88HQ-1	T3		TBVV	0 0 9

CABLE: C037 CONNECTS: 101 TURBINE CONTROL PANEL
115 JB002 ACCESSORY BASE LEVEL 3

FROM LOCATION 101			CABLE		DEVICE			TO LOCATION 115		
INT LOC	TERM BD	TERM	PIN	COND	WIRE #	DEVICE	DESC	INT LOC	TERM BD	TERM
			0 1	0 1 BLK	SP					
			0 2	0 2 BLK	SP					
<CD>	DTBA	009	0 3	0 3 BLK	7648	33TM-5	08		TBD	003
<CD>	DTBA	015	0 4	0 4 BLK	7649	63HR-2	NO		TBD	004
<CD>	DTBA	017	0 5	0 5 BLK	7646	63HR-1	NO		TBD	005
<CD>	DTBA	019	0 6	0 6 BLK	147	43HR-1	1NO2		TBD	006
<QD1>	DTBA	003	0 7	0 7 BLK	133	26QT-1A	NC		TBD	007
<QD1>	DTBA	039	0 8	0 8 BLK	2230	26QT-1B	NC		TBD	008
<CD>	DTBA	003	0 9	0 9 BLK	111	26QN-1	NO		TBD	009
<QD1>	DTBA	001	1 0	1 0 BLK	643	26QA-1	NC		TBD	010
<CD>	DTBA	007	1 1	1 1 BLK	1682	63QQ-1	NC		TBD	011
<CD>	DTBA	029	1 2	1 2 BLK	666	63HF-1	NC		TBD	012
<QD1>	DTBA	007	1 3	1 3 BLK	665	63HQ-1	NO		TBD	013
<CD>	DTBA	013	1 4	1 4 BLK	691	71QL-1	NO		TBD	014
<CD>	DTBA	011	1 5	1 5 BLK	690	71QH-1	NC		TBD	015
<QD1>	DTBA	005	1 6	1 6 BLK	652	63QA-1	NO		TBD	016
<QD2>	DTBB	001	1 7	1 7 BLK		63AD-1A	NO		TBD	0 2 0
<QD2>	DTBA	009	1 8	1 8 BLK		63AD-1B	NO		TBD	0 1 9
<QD2>	DTBA	070	1 9	1 9 BLK		63AD-1C	NO		TBD	0 1 8
<QD2>	DTBA	027	2 0	2 0 BLK	130	63HL-1	NO		TBH	0 0 2
<QD2>	DTBA	029	2 1	2 1 RED	621	63HL-2	NO		TBH	0 0 3
<QD2>	DTBA	031	2 2	2 2 RED	122	63HL-3	NO		TBH	0 0 4
<QD2>	DTBA	075	2 3	2 3 RED	148	63FL-2	NO		TBG	0 0 6
<QD2>	DTBA	033	2 4	2 4 RED	633	63AF-1	NO		TBH	0 0 1
<QD1>	DTBA	031	2 5	2 5 RED	1560	26HA-1	NC		TBF	007
<CD>	DTBA	010	2 6	2 6 RED	107	P125VDC	COM		TBC	009
<QD1>	DTBA	027	2 7	2 7 RED	3522	23HA-3	NC		TBF	009
<QD2>	DTBC	021	2 8	2 8 RED	218	20CF-1	0 1		TBH	009
<QD2>	DTBC	022	2 9	2 9 RED	108	20CF-1	0 2		TBB	009
			3 0	3 0 RED	SP					
<QD1>	DTBC	010	3 1	3 1 RED	256	20TV-1	01		TBH	010
<QD1>	DTBC	009	3 2	3 2 RED	108	20TV-1	02		TBB	011
			3 3	3 3 RED	SP					
<CD>	DTBC	002	3 4	3 4 RED	5162	20HR-1	01		TBH	012

CABLE: C037 CONNECTS: 101 TURBINE CONTROL PANEL
115 JB002 ACCESSORY BASE LEVEL 3

FROM LOCATION 101			CABLE		DEVICE			TO LOCATION 115		
INT LOC	TERM BD	TERM	PIN	COND	WIRE #	DEVICE	DESC	INT LOC	TERM BD	TERM
<CD>	DTBC	006	3 5	3 5 RED	242	20TU-1	01		TBH	013
			3 8	3 6 RED	SP					
<CD>	DTBC	001	3 7	3 7 RED	108CD	20HR-1	02		TBB	019

NOTES FOR CABLE C037

NUMBER NOTES

1 CONDUCTORS 37 (108CD) IS THE COMMON FOR THE SIGNALS ON CONDUCTORS 34 AND 35.

2 ADD THE FOLLOWING JUMPERS IN (115) JB002 ACCESSORY BASE:
TBF-(006) TO TBC-(009) TBF-(006) TO TBC-(008) TBB-(019) TO TBB-(020)

3 CONDUCTOR 26 (107) IS THE COMMON FOR THE SIGNALS ON CUDUCTORS 3 THRU. 29.

CABLE: C038 CONNECTS: 101 TURBINE CONTROL PANEL
234 JB020B TURBINE OFF BASE RACK LOW LEVEL

FROM LOCATION 101			CABLE		DEVICE			TO LOCATION 234		
INT LOC	TERM BD	TERM	PIN	COND	WIRE #	DEVICE	DESC	INT LOC	TERM BD	TERM
<C>	SHD	COM		0 1 SHD	E9690	CT-IF-3/R	SHD		TBA	006
<C>	TBCA	088	0 1	0 1 ORN	9690	CT-IF-3/R	WHT1		TBA	001
<C>	TBCA	090	0 2	0 1 BLK	9692	CT-IF-3/R	RED1		TBA	002
<C>	SHD	COM		0 2 SHD	E9691	CT-IF-3/R	SHD		TBA	005
<C>	TBCA	089	0 3	0 2 ORN	9691	CT-IF-3/R	RED2		TBA	004
			0 4	0 2 BLK	SP					
<P>	SHD	COM		0 3 SHD	E320	77HT-1	SHD		TBA	009
<P>	PTBA	001	0 5	0 3 ORN	320	77HT-1	WHT		TBA	007
<P>	PTBA	002	0 6	0 3 BLK	321	77HT-1	BLK		TBA	008
<P>	SHD	COM		0 4 SHD	E322	77HT-2	SHD		TBA	012
<P>	PTBA	005	0 7	0 4 ORN	322	77HT-2	WHT		TBA	010
<P>	PTBA	006	0 8	0 4 BLK	323	77HT-2	BLK		TBA	011
<P>	SHD	COM		0 5 SHD	E324	77HT-3	SHD		TBA	015
<P>	PTBA	009	0 9	0 5 ORN	324	77HT-3	WHT		TBA	013
<P>	PTBA	010	1 0	0 5 BLK	325	77HT-3	BLK		TBA	014
<R>	SHD	COM		0 6 SHD	E3230	39V-1A	SHD		TBA	018
<R>	TBQB	051	1 1	0 6 ORN	3230	39V-1A	WHT		TBA	016
<R>	TBQB	052	1 2	0 6 BLK	3231	39V-1A	W/B+		TBA	017
<R>	SHD	COM		0 7 SHD	E5320	39V-1B	SHD		TBE	003
<R>	TBQB	053	1 3	0 7 ORN	5320	39V-1B	WHT		TBE	001

CABLE: C038 CONNECTS: 101 TURBINE CONTROL PANEL
234 JB020B TURBINE OFF BASE RACK LOW LEVEL

FROM LOCATION 101			CABLE		DEVICE			TO LOCATION 234		
INT LOC	TERM BD	TERM	PIN	COND	WIRE #	DEVICE	DESC	INT LOC	TERM BD	TERM
<R>	TBQB	054	1 4	0 7 BLK	5321	39V-1B	W/B+		TBE	002
<S>	SHD	COM		0 8 SHD	E368	90TV-1	SHD		TBE	006
<S>	QTBA	041	1 5	0 8 ORN	368	90TV-1	RED		TBE	004
<S>	QTBA	039	1 6	0 8 BLK	369	90TV-1	WHT		TBE	005
<R>	SHD	COM		0 9 SHD	E370	90TV-1	SHD		TBE	009
<R>	QTBA	041	1 7	0 9 ORN	370	90TV-1	YEL		TBE	007
<R>	QTBA	039	1 8	0 9 BLK	371	90TV-1	GRN		TBE	008
<T>	SHD	COM		1 0 SHD	E2394	90TV-1	SHD		TBE	012
<T>	QTBA	041	1 9	1 0 ORN	2395	90TV-1	ORN		TBE	010
<T>	QTBA	039	2 0	1 0 BLK	2394	90TV-1	BLU		TBE	011
<T>	SHD	COM		1 1 SHD	E8694	96TV-1	SHD		TBE	016
<T>	QTBA	005	2 1	1 1 ORN	8694	96TV-1	RED		TBE	014
<T>	QTBA	006	2 2	1 1 BLK	8695	96TV-1	BLK		TBE	015
<R>	SHD	COM		1 2 SHD	E366	96TV-1	SHD		TBE	019
<R>	TBQC	017	2 3	1 2 ORN	366	96TV-1	BLU		TBE	017
<R>	TBQC	018	2 4	1 2 BLK	367	96TV-1	YEL		TBE	018
<R>	SHD	COM		1 3 SHD	E8696	96TV-2	SHD		TBF	003
<R>	QTBA	007	2 5	1 3 ORN	8696	96TV-2	RED		TBF	001
<R>	QTBA	008	2 6	1 3 BLK	8697	96TV-2	BLK		TBF	002
<R>	SHD	COM		1 4 SHD	E372	96TV-2	SHD		TBF	006
<R>	TBQC	019	2 7	1 4 ORN	372	96TV-2	BLU		TBF	004
<R>	TBQC	020	2 8	1 4 BLK	373	96TV-2	YEL		TBF	005
<R>	SHD	COM		1 5 SHD	E3232	39V-2A	SHD		TBF	010
<R>	TBQB	055	2 9	1 5 ORN	3232	39V-2A	WHT		TBF	008
<R>	TBQB	056	3 0	1 5 BLK	3233	39V-2A	W/B+		TBF	009
<R>	SHD	COM		1 6 SHD	E2360	77NH-1	SHD		TBF	013
<R>	QTBA	051	3 1	1 6 ORN	2360	77NH-1	WHT		TBF	011
<R>	QTBA	052	3 2	1 6 BLK	2361	77NH-1	BLK		TBF	012
<S>	SHD	COM		1 7 SHD	E2362	77NH-2	SHD		TBF	016
<S>	QTBA	051	3 3	1 7 ORN	2362	77NH-2	WHT		TBF	014
<S>	QTBA	052	3 4	1 7 BLK	2363	77NH-2	BLK		TBF	015
<T>	SHD	COM		1 8 SHD	E2364	77NH-3	SHD		TBF	019
<T>	QTBA	051	3 5	1 8 ORN	2364	77NH-3	WHT		TBF	017
<T>	QTBA	052	3 6	1 8 BLK	2365	77NH-3	BLK		TBF	018

CABLE: C039 CONNECTS: 101 TURBINE CONTROLS PANEL

233 JB020A TURBINE OFF BASE RACK LOW LEVEL

FROM LOCATION 101			CABLE		DEVICE			TO LOCATION 233		
INT LOC	TERM BD	TERM	PIN	COND	WIRE #	DEVICE	DESC	INT LOC	TERM BD	TERM
			0 1	0 1 YEL	SP					
			0 2	0 1 RED	SP					
<C>	TBQA	071	0 3	0 2 YEL	2403	BT-J2-2A	YEL		TBA	0 0 3
<C>	TBQA	072	0 4	0 2 RED	2404	BT-J2-2A	RED		TBA	0 0 4
<C>	TBQA	069	0 5	0 3 YEL	1499	BT-J2-1A	YEL		TBA	0 0 5
<C>	TBQA	070	0 6	0 3 RED	2400	BT-J2-1A	RED		TBA	0 0 6
<C>	TBQA	067	0 7	0 4 YEL	1493	BT-J1-2A	YEL		TBA	0 0 7
<C>	TBQA	068	0 8	0 4 RED	1494	BT-J1-2A	RED		TBA	0 0 8
<C>	TBQA	065	0 9	0 5 YEL	1489	BT-J1-1A	YEL		TBA	0 0 9
<C>	TBQA	066	1 0	0 5 RED	1490	BT-J1-1A	RED		TBA	0 1 0
<C>	TBQA	059	1 1	0 6 YEL	1481	BT-T11-2A	YEL		TBA	0 1 1
<C>	TBQA	060	1 2	0 6 RED	1482	BT-T11-2A	RED		TBA	0 1 2
<C>	TBQA	057	1 3	0 7 YEL	1479	BT-T11-1A	YEL		TBA	0 1 3
<C>	TBQA	058	1 4	0 7 RED	1480	BT-T11-1A	RED		TBA	0 1 4
<C>	TBQA	063	1 5	0 8 YEL	1467	BT-TA1-2A	YEL		TBA	0 1 5
<C>	TBQA	064	1 6	0 8 RED	1468	BT-TA1-2A	RED		TBA	0 1 6
<C>	TBQA	061	1 7	0 9 YEL	1465	BT-TA1-1A	YEL		TBA	0 1 7
<C>	TBQA	062	1 8	0 9 RED	1466	BT-TA1-1A	RED		TBA	0 1 8

CABLE: C041 CONNECTS: 101 TURBINE CONTROL PANEL
233 JB020A TURBINE OFF BASE RACK LOW LEVEL

FROM LOCATION 101			CABLE		DEVICE			TO LOCATION 233		
INT LOC	TERM BD	TERM	PIN	COND	WIRE #	DEVICE	DESC	INT LOC	TERM BD	TERM
			0 1	0 1 YEL	SP					
			0 2	0 1 RED	SP					
<C>	TBQA	047	0 3	0 2 YEL	475	LT-B2D-A	YEL		TBC	0 0 3
<C>	TBQA	048	0 4	0 2 RED	476	LT-B2D-A	RED		TBC	0 0 4
<R>	TBQA	077	0 5	0 3 YEL	465	CT-DA-3	YEL		TBC	0 0 5
<R>	TBQA	078	0 6	0 3 RED	466	CT-DA-3	RED		TBC	0 0 6
<R>	TBQA	047	0 7	0 4 YEL	463	CT-DA-2	YEL		TBC	0 0 7
<R>	TBQA	048	0 8	0 4 RED	464	CT-DA-2	RED		TBC	0 0 8
<C>	TBQA	011	0 9	0 5 YEL	445	TT-WS1AO-2	YEL		TBC	0 0 9
<C>	TBQA	012	1 0	0 4 RED	446	TT-WS1AO-3	RED		TBC	0 1 0
<C>	TBQA	015	1 1	0 5 YEL	449	TT-WS2FO-2	YEL		TBC	0 1 1
<C>	TBQA	016	1 2	0 5 RED	450	TT-WS2FO-2	RED		TBC	0 1 2
<C>	TBQA	003	1 3	0 6 YEL	1485	TT-WS1F1-2	YEL		TBC	0 1 3
<C>	TBQA	004	1 4	0 6 RED	1486	TT-WS1F1-2	RED		TBC	0 1 4
<C>	TBQA	019	1 5	0 7 YEL	453	TT-WS2AO-2	YEL		TBC	0 1 5
<C>	TBQA	020	1 6	0 7 RED	454	TT-WS2AO-2	RED		TBC	0 1 6
<C>	TBQA	023	1 7	0 8 YEL	1437	TT-WS3FO-2	YEL		TBC	0 1 7
<C>	TBQA	024	1 8	0 8 RED	1438	TT-WS3FO-2	RED		TBC	0 1 8

CABLE: C042 CONNECTS: 101 TURBINE CONTROL PANEL
230 JB019A TURBINE OFF BASE RACK LEVEL 3

FROM LOCATION 101			CABLE		DEVICE			TO LOCATION 230		
INT LOC	TERM BD	TERM	PIN	COND	WIRE #	DEVICE	DESC	INT LOC	TERM BD	TERM
<QD1>	DTBB	045	01	01 BLK	9102	30SG-1	NO		TBA	0 0 1
			02	02 BLK	SP					
			03	03 BLK	SP					
			04	04 BLK	SP					
			05	05 BLK	SP					
			06	06 BLK	SP					
			07	07 BLK	SP					
			08	08 BLK	SP					
			09	09 BLK	SP					
			10	10 BLK	SP					
<QD2>	DTBA	049	11	11 BLK	1637	33BQ-1	NO2		TBA	0 1 1
<QD1>	DTBA	025	12	12 BLK	644	26BT-1	NC		TBA	0 1 2
<QD1>	DTBC	062	13	13 BLK	238	20CB-1	0 1		TBA	0 1 3
			14	14 BLK	SP					
			15	15 BLK	SP					
			16	16 BLK	SP					
			17	17 BLK	SP					
<QD1>	DTBB	046	18	18 BLK	107	P125VDC	COM		TBB	0 0 1
<QD1>	DTBC	061	19	19 BLK	108QD1	20CB-1	0 2		TBA	0 1 9

NOTES FOR CABLE C042

NUMBER NOTES

1 CONDUCTOR 18 (107) IS THE COMMON FOR THE SIGNALS ON CONDUCTORS 01, 11, AND 12.

CABLE: C049 CONNECTS: 102 GENERATOR CONTROL PANEL
146 METALCLAD SWITCHGEAR

FROM LOCATION 102			CABLE		DEVICE			TO LOCATION 146		
INT LOC	TERM BD	TERM	PIN	COND	WIRE #	DEVICE	DESC	INT LOC	TERM BD	TERM
			0 1	0 1 BLK	SP					
			0 2	0 2 BLK	SP					
			0 3	0 3 BLK	SP					
			0 4	0 4 BLK	SP					
			0 5	0 5 BLK	SP					
			0 6	0 6 BLK	SP					
			0 7	0 7 BLK	SP					
			0 8	0 8 BLK	SP					
			0 9	0 9 BLK	SP					
	TBA	012	1 0	1 0 BLK	1810	52G_AUX	NC		TBC49	0 1 0
	TBT	008	1 1	1 1 BLK	2798	52G/TRIP2	+		TBC49	0 1 1
	TBT	009	1 2	1 2 BLK	2799	52G/TRIP2			TBC49	0 1 2
	TBT	012	1 3	1 3 BLK	2792	52G/TRIP2	-		TBC49	0 1 3
	TBT	010	1 4	1 4 BLK	2798	52G/TRIP2	+		TBC49	0 1 4
	TBT	011	1 5	1 5 BLK	2799	52G/TRIP2			TBC49	0 1 5
	TBC	009	1 6	1 6 BLK	1803	52G_STA	NO		TBC49	0 1 6
	TBC	010	1 7	1 7 BLK	1804	52G_STA	NO		TBC49	0 1 7
	TBB	012	1 8	1 8 BLK	1133	52G_STA	NC		TBC49	0 1 8
	TBC	005	1 9	1 9 BLK	1134	52G_STA	NC		TBC49	0 1 9
	TBC	011	2 0	2 0 BLK	1802	52G_AUX	NO		TBC49	0 2 0
	TBA	011	2 1	0 1 RED	1807	52G_AUX	NO		TBC49	0 2 1
	TBA	009	2 2	0 2 RED	1805	52G_AUX	NO		TBC49	0 2 2
	TBA	010	2 3	0 3 RED	1806	52G_AUX	C		TBC49	0 2 3
	TBA	005	2 4	0 4 RED	830	52G_AUX	NC		TBC49	0 2 4
	TBA	004	2 5	0 5 RED	834	52G_AUX	C		TBC49	0 2 5
	TBC	006	2 6	0 6 RED	842	52G_AUX	NO		TBC49	0 2 6
	TBB	005	2 7	0 7 RED	1137	52G/CC	C+		TBC49	0 2 7
	TBC	001	2 8	0 8 RED	1146	52G/CC	C		TBC49	0 2 8
	TBA	006	2 9	0 9 RED	1153	52G/CC	C-		TBC49	0 2 9
	TBB	011	3 0	1 0 RED	1137	52G/CC	C+		TBC49	0 3 0
	TBA	008	3 1	1 1 RED	1146	52G/CC	C		TBC49	0 3 1
	TBA	007	3 2	1 2 RED	1156	52G/TRIP			TBC49	0 3 2
	TBC	012	3 3	1 3 RED	1157	52G/TRIP	+		TBC49	0 3 3
	TBC	002	3 4	1 4 RED	1154	52G/TGIL			TBC49	0 3 4

CABLE: C049 CONNECTS: 102 GENERATOR CONTROL PANEL
146 METALCLAD SWITCHGEAR

FROM LOCATION 102			CABLE		DEVICE			TO LOCATION 146		
INT LOC	TERM BD	TERM	PIN	COND	WIRE #	DEVICE	DESC	INT LOC	TERM BD	TERM
	TBC	008	3 5	1 5 RED	1155	52G/TRIP	-		TBC49	0 3 5
	TBC	003	3 6	1 6 RED	1156	52G/TRIP			TBC49	0 3 6
	TBC	004	3 7	1 7 RED	1157	52G/TRIP	+		TBC49	0 3 7

NOTES FOR CABLE C049

NUMBER	NOTES
1	ADD THE FOLLOWING JUMPERS IN (102) GENERATOR CONTROL PANEL: TBB-(8) TO TBB-(9) TBB-(9) TO TBB-(12) WIRE #1133

CABLE: C055A CONNECTS: 334 PEECC MOTOR CONTROL CENTER
381 JB021A TURBINE OFF BASE RACK LEVEL 4

FROM LOCATION 334			CABLE		DEVICE			TO LOCATION 381		
INT LOC	TERM BD	TERM	PIN	COND	WIRE #	DEVICE	DESC	INT LOC	TERM BD	TERM
MCC1	HT1-TB	T1	0 1	0 1 BLK	T1-HT1	23HT-1	T1		TBTT	004
MCC1	HT1-TB	T2	0 2	0 2 BLK	T2-HT1	23HT-1	T2		TBTT	005
MCC1	HT1-TB	T3	0 3	0 3 BLK	T3-HT1	23HT-1	T3		TBTT	006

CABLE: C055B CONNECTS: 334 PEECC MOTOR CONTROL CENTER
381 JB021A TURBINE OFF BASE RACK LEVEL 4

FROM LOCATION 334			CABLE		DEVICE			TO LOCATION 381		
INT LOC	TERM BD	TERM	PIN	COND	WIRE #	DEVICE	DESC	INT LOC	TERM BD	TERM
MCC2	HT2-TB	T1	0 1	0 1 BLK	T1-HT2	23HT-2	T1		TBSS	001
MCC2	HT2-TB	T2	0 2	0 2 BLK	T2-HT2	23HT-2	T2		TBSS	002
MCC2	HT2-TB	T3	0 3	0 3 BLK	T3-HT2	23HT-2	T3		TBSS	003

CABLE: C059 CONNECTS: 133 JB005C GENERATOR COMPARTMENT LEVEL 4
334 PEECC MOTOR CONTROL CENTER

FROM LOCATION 133			CABLE		DEVICE			TO LOCATION 334		
INT LOC	TERM BD	TERM	PIN	COND	WIRE #	DEVICE	DESC	INT LOC	TERM BD	TERM
	TBA	001	0 1	0 1 BLK	3518	23HG-1, -3, -5	T1	MCC2	HG-TB	T1
	TBA	002	0 2	0 2 BLK	3519	23HG-1, -3, -5	T2	MCC2	HG-TB	T2
	TBA	003	0 3	0 3 BLK	3520	23HG-1, -3, -5	T3	MCC2	HG-TB	T3

NOTES FOR CABLE C059

NUMBER NOTES

1 ADD THE FOLLOWING JUMPERS IN (133) JB005C GENERATOR COMPARTMENT LEVEL 4:
TBA-(001) TO TBA-(005) TBA-(005) TO TBA-(009)
TBA-(002) TO TBA-(006) TBA-(006) TO TBA-(010)
TBA-(003) TO TBA-(007) TBA-(007) TO TBA-(011)

CABLE: C071 CONNECTS: 128 EXHAUST FRAME BLOWER 88TK-1
334 PEECC MOTOR CONTROL CENTER

FROM LOCATION 128			CABLE		DEVICE			TO LOCATION 334		
INT LOC	TERM BD	TERM	PIN	COND	WIRE #	DEVICE	DESC	INT LOC	TERM BD	TERM
	88TK-1	T1	0 1	0 1 BLK	T1-TK1	88TK-1	T1	MCC1	TK1-TB	T1
	88TK-1	T2	0 2	0 2 BLK	T2-TK1	88TK-1	T2	MCC1	TK1-TB	T2
	88TK-1	T3	0 3	0 3 BLK	T3-TK1	88TK-1	T3	MCC1	TK1-TB	T3

CABLE: C072 CONNECTS: 129 EXHAUST FRAME BLOWER 88TK-2
334 PEECC MOTOR CONTROL CENTER

FROM LOCATION 129			CABLE		DEVICE			TO LOCATION 334		
INT LOC	TERM BD	TERM	PIN	COND	WIRE #	DEVICE	DESC	INT LOC	TERM BD	TERM
	88TK-2	T1	0 1	0 1 BLK	T1-TK2	88TK-2	T1	MCC2	TK2-TB	T1
	88TK-2	T2	0 2	0 2 BLK	T2-TK2	88TK-2	T2	MCC2	TK2-TB	T2
	88TK-2	T3	0 3	0 3 BLK	T3-TK2	88TK-2	T3	MCC2	TK2-TB	T3

CABLE: C073 CONNECTS: 101 TURBINE CONTROL PANEL
387 JB020G TURBINE COMPARTMENT LOW LEVEL

FROM LOCATION 101			CABLE		DEVICE			TO LOCATION 387		
INT LOC	TERM BD	TERM	PIN	COND	WIRE #	DEVICE	DESC	INT LOC	TERM BD	TERM
			0 1	0 1 YEL	SP					
			0 2	0 1 RED	SP					
			0 3	0 2 YEL	SP					
			0 4	0 2 RED	SP					
			0 5	0 3 YEL	SP					
			0 6	0 3 RED	SP					
			0 7	0 4 YEL	SP					
			0 8	0 4 RED	SP					
<R>	TBQA	0 0 7	0 9	0 5 YEL	417	TT-XD-10	YEL		TBC	0 0 9
<R>	TBQA	0 0 8	1 0	0 5 RED	418	TT-XD-10	RED		TBC	0 1 0
<R>	TBQA	0 6 5	1 1	0 6 YEL	415	TT-XD-9	YEL		TBC	0 1 1
<R>	TBQA	0 6 6	1 2	0 6 RED	416	TT-XD-9	RED		TBC	0 1 2
			1 3	0 7 YEL	SP					
			1 4	0 7 RED	SP					
<R>	TBQA	0 2 7	1 5	0 8 YEL	2445	TT-IB-1	YEL		TBC	0 1 5
<R>	TBQA	0 2 8	1 6	0 8 RED	2446	TT-IB-1	RED		TBC	0 1 6
<R>	TBQA	0 6 1	1 7	0 9 YEL	403	TT-XD-3	YEL		TBC	0 1 7
<R>	TBQA	0 6 2	1 8	0 9 RED	404	TT-XD-3	RED		TBC	0 1 8
<R>	TBQA	0 0 5	1 9	1 0 YEL	411	TT-XD-7	YEL		TBC	0 1 9
<R>	TBQA	0 0 6	2 0	1 0 RED	412	TT-XD-7	RED		TBC	0 2 0
<R>	TBQA	0 3 1	2 1	1 1 YEL	401	TT-XD-2	YEL		TBD	0 0 1
<R>	TBQA	0 3 2	2 2	1 1 RED	402	TT-XD-2	RED		TBD	0 0 2
<R>	TBQA	0 6 3	2 3	1 2 YEL	409	TT-XD-6	YEL		TBD	0 0 3
<R>	TBQA	0 6 4	2 4	1 2 RED	410	TT-XD-6	RED		TBD	0 0 4
<R>	TBQA	0 0 1	2 5	1 3 YEL	399	TT-XD-1	YEL		TBD	0 0 5
<R>	TBQA	0 0 2	2 6	1 3 RED	400	TT-XD-1	RED		TBD	0 0 6
<C>	TBQA	0 2 5	2 7	1 4 YEL	1431	TT-WS3A0-1	YEL		TBD	0 0 7
<C>	TBQA	0 2 6	2 8	1 4 RED	1432	TT-WS3A0-1	RED		TBD	0 0 8
<R>	TBQA	0 3 5	2 9	1 5 YEL	413	TT-XD-8	YEL		TBD	0 0 9
<R>	TBQA	0 3 6	3 0	1 5 RED	414	TT-XD-8	RED		TBD	0 1 0
<R>	TBQA	0 3 3	3 1	1 6 YEL	407	TT-XD-5	YEL		TBD	0 1 1
<R>	TBQA	0 3 4	3 2	1 6 RED	408	TT-XD-5	RED		TBD	0 1 2
<R>	TBQA	0 0 3	3 3	1 7 YEL	405	TT-XD-4	YEL		TBD	0 1 3
<R>	TBQA	0 0 4	3 4	1 7 RED	406	TT-XD-4	RED		TBD	0 1 4
			3 5	1 8 YEL	SP					
			3 6	1 8 RED	SP					

CABLE: C074 CONNECTS: 101 TURBINE CONTROL PANEL
387 JB020G TURBINE COMPARTMENT LOW LEVEL

FROM LOCATION 101			CABLE		DEVICE			TO LOCATION 387		
INT LOC	TERM BD	TERM	PIN	COND	WIRE #	DEVICE	DESC	INT LOC	TERM BD	TERM
<C>	TBQA	075	0 1	0 1 YEL	3487	BT-J3-2A	YEL		TBA	0 0 1
<C>	TBQA	076	0 2	0 1 RED	3488	BT-J3-2A	RED		TBA	0 0 2
<C>	TBQA	073	0 3	0 2 YEL	3485	BT-J3-1A	YEL		TBA	0 0 3
<C>	TBQA	074	0 4	0 2 RED	3486	BT-J3-1A	RED		TBA	0 0 4
			0 5	0 3 YEL	5479	BT-J3-2B	YEL		TBA	0 0 5
			0 6	0 3 RED	5480	BT-J3-2B	RED		TBA	0 0 6
			0 7	0 4 YEL	5481	BT-J3-1B	YEL		TBA	0 0 7
			0 8	0 4 RED	5482	BT-J3-1B	RED		TBA	0 0 8
			0 9	0 5 YEL	1461	LT-B3D-B	YEL		TBA	0 0 9
			1 0	0 5 RED	1462	LT-B3D-B	RED		TBA	0 1 0
<C>	TBQA	049	1 1	0 6 YEL	477	LT-B3D-A	YEL		TBA	0 1 1
<C>	TBQA	050	1 2	0 6 RED	478	LT-B3D-A	RED		TBA	0 1 2
<R>	TBQA	087	1 3	0 7 YEL	1425	TT-IB-3	YEL		TBA	0 1 3
<R>	TBQA	088	1 4	0 7 RED	1426	TT-IB-3	RED		TBA	0 1 4
<R>	TBQA	057	1 5	0 8 YEL	2447	TT-IB-2	YEL		TBA	0 1 5
<R>	TBQA	058	1 6	0 8 RED	2448	TT-IB-2	RED		TBA	0 1 6
<R>	TBQA	009	1 7	0 9 YEL	2449	TT-XD-13	YEL		TBA	0 1 7
<R>	TBQA	010	1 8	0 9 RED	2450	TT-XD-13	RED		TBA	0 1 8
<R>	TBQA	067	1 9	1 0 YEL	421	TT-XD-12	YEL		TBA	0 1 9
<R>	TBQA	068	2 0	1 0 RED	422	TT-XD-12	RED		TBA	0 2 0
<R>	TBQA	071	2 1	1 1 YEL	3433	TT-XD-18	YEL		TBB	0 0 1
<R>	TBQA	072	2 2	1 1 RED	3434	TT-XD-18	RED		TBB	0 0 2
<R>	TBQA	037	2 3	1 2 YEL	419	TT-XD-11	YEL		TBB	0 0 3
<R>	TBQA	038	2 4	1 2 RED	420	TT-XD-11	RED		TBB	0 0 4
<R>	TBQA	041	2 5	1 3 YEL	3405	TT-XD-17	YEL		TBB	0 0 5
<R>	TBQA	042	2 6	1 3 RED	3406	TT-XD-17	RED		TBB	0 0 6
<R>	TBQA	011	2 7	1 4 YEL	3403	TT-XD-16	YEL		TBB	0 0 7
<R>	TBQA	012	2 8	1 4 RED	3404	TT-XD-16	RED		TBB	0 0 8
<C>	TBQA	027	2 9	1 5 YEL	1433	TT-WS3AO-2	YEL		TBB	0 0 9
<C>	TBQA	028	3 0	1 5 RED	1434	TT-WS3AO-2	RED		TBB	0 1 0
<R>	TBQA	069	3 1	1 6 YEL	3401	TT-XD-15	YEL		TBB	0 1 1
<R>	TBQA	070	3 2	1 6 RED	3402	TT-XD-15	RED		TBB	0 1 2

CABLE: C074 CONNECTS: 101 TURBINE CONTROL PANEL
387 JB020G TURBINE COMPARTMENT LOW LEVEL

FROM LOCATION 101			CABLE		DEVICE			TO LOCATION 387		
INT LOC	TERM BD	TERM	PIN	COND	WIRE #	DEVICE	DESC	INT LOC	TERM BD	TERM
<R>	TBQA	039	3 3	1 7 YEL	2499	TT-XD-14	YEL		TBB	0 1 3
<R>	TBQA	040	3 4	1 7 RED	3400	TT-XD-14	RED		TBB	0 1 4
			3 5	1 8 YEL	SP					
			3 6	1 8 RED	SP					

NOTES FOR CABLE C074

NUMBER	NOTES
1	"B" ELEMENTS NOT CONNECTED IN (101) TURBINE CONTROL PANEL. THESE ARE SPARE ELEMENTS.

CABLE: C076 CONNECTS: 101 TURBINE CONTROL PANEL
135 JB005A GENERATOR COMPARTMENT LOW LEVEL

FROM LOCATION 101			CABLE		DEVICE			TO LOCATION 135		
INT LOC	TERM BD	TERM	PIN	COND	WIRE #	DEVICE	DESC	INT LOC	TERM BD	TERM
<R>	SHD	COM		0 1 SHD	E3236	39V-4A	SHD		TBD	033
<R>	TBQB	069	0 1	0 1 ORN	3236	39V-4A	WHT		TBD	031
<R>	TBQB	070	0 2	0 1 BLK	3237	39V-4A	BLK		TBD	032
<R>	SHD	COM		0 2 SHD	E5326	39V-4B	SHD		TBD	038
<R>	TBQB	071	0 3	0 2 ORN	5326	39V-4B	WHT		TBD	036
<R>	TBQB	072	0 4	0 2 BLK	5327	39V-4B	BLK		TBD	037
				0 3 SHD			SHD			
			0 5	0 3 ORN	SP					
			0 6	0 3 BLK	SP					
<R>	SHD	COM		0 4 SHD	E3238	39V-5A	SHD		TBD	043
<R>	TBQB	073	0 7	0 4 ORN	3238	39V-5A	WHT		TBD	041
<R>	TBQB	074	0 8	0 4 BLK	3239	39V-5A	BLK		TBD	042
				0 5 SHD			SHD			
			0 9	0 5 ORN	SP					
			1 0	0 5 BLK	SP					
				0 6 SHD			SHD			
			1 1	0 6 ORN	SP					
			1 2	0 6 BLK	SP					
				0 7 SHD			SHD			
			1 3	0 7 ORN	SP					
			1 4	0 7 BLK	SP					
				0 8 SHD			SHD			

CABLE: C076 CONNECTS: 101 TURBINE CONTROL PANEL
135 JB005A GENERATOR COMPARTMENT LOW LEVEL

FROM LOCATION 101			CABLE		DEVICE			TO LOCATION 135		
INT LOC	TERM BD	TERM	PIN	COND	WIRE #	DEVICE	DESC	INT LOC	TERM BD	TERM
			1 5	0 8 ORN	SP					
			1 6	0 8 BLK	SP					
				0 9 SHD			SHD			
			1 7	0 9 ORN	SP					
			1 8	0 9 BLK	SP					

CABLE: C077 CONNECTS: 146 METALCLAD SWITCHGEAR
334 PEECC MOTOR CONTROL CENTER

FROM LOCATION 146			CABLE		DEVICE			TO LOCATION 334		
INT LOC	TERM BD	TERM	PIN	COND	WIRE #	DEVICE	DESC	INT LOC	TERM BD	TERM
	AC_PNL	L1	0 1	01 BLK	4542	3PH_SUPPLY	L1	MCC1	AC_BKR	6A
	AC_PNL	L2	0 2	02 BLK	4543	3PH_SUPPLY	L2	MCC1	AC_BKR	6B
	AC_PNL	L3	0 3	03 BLK	4544	3PH_SUPPLY	L3	MCC1	AC_BKR	6C

CABLE: C080 CONNECTS: 146 METALCLAD SWITCHGEAR
335 BUS DUCT

FROM LOCATION 146			CABLE		DEVICE			TO LOCATION 335		
INT LOC	TERM BD	TERM	PIN	COND	WIRE #	DEVICE	DESC	INT LOC	TERM BD	TERM
	TBL	0 0 1	0 1	0 1 BLK	3519A	23BD-1	T1		23BD-1	T1
	TBL	0 0 2	0 2	0 2 BLK	3520A	23BD-1	T2		23BD-1	T2
			0 3	0 3 BLK	SP					

CABLE: C083 CONNECTS: 102 GENERATOR CONTROL PANEL
146 MEDTAL CLAD SWITCHGEAR

FROM LOCATION 102			CABLE		DEVICE			TO LOCATION 146		
INT LOC	TERM BD	TERM	PIN	COND	WIRE #	DEVICE	DESC	INT LOC	TERM BD	TERM
	TBB	0 0 3	0 1	0 1 BLK	752	VT1	P1		TBC83B	0 0 1
	TBB	0 0 2	0 2	0 2 BLK	751N	VT1	P2		TBC83B	0 0 2
	TBB	0 0 4	0 3	0 3 BLK	753	VT1	P3		TBC83B	0 0 3
	TBB	0 0 6	0 4	0 4 BLK	751N	VT1	PN		TBC83B	0 0 4
			0 5	0 5 BLK	SP					
			0 6	0 6 BLK	SP					
			0 7	0 7 BLK	SP					
			0 8	0 8 BLK	SP					
			0 9	0 9 BLK	SP					
	TBS	0 0 4	1 0	1 0 BLK	755	VT2	P1		TBC83A	0 0 1
	TBS	0 0 3	1 1	1 1 BLK	751	VT2	P2		TBC83A	0 0 2
	TBS	0 0 5	1 2	1 2 BLK	761	VT2	P3		TBC83A	0 0 3

CABLE:C094B CONNECTS: 135 JB005A GENERATOR COMPARTMENT LOW LEVEL
562 STATIC VOLTAGE REGULATOR--EX2000R

FROM LOCATION 135			CABLE		DEVICE			TO LOCATION 562		
INT LOC	TERM BD	TERM	PIN	COND	WIRE #	DEVICE	DESC	INT LOC	TERM BD	TERM
				01 SHD	E3172	64F	SHD			
	TBC	033	01	01 ORN	3172	64F	A		2TB	021
	TBC	034	02	01 BLK	3173	64F	B		2TB	022
	TBD	028		02 SHD	E3174	64F	SHD			
	TBD	025	03	02 ORN	3174	64F	C		3TB	094
	TBD	026	04	02 BLK	3175	64F	D		3TB	095
				03 SHD			SHD			
			05	03 ORN	SP					
			06	03 BLK	SP					
				04 SHD			SHD			
			07	04 ORN	SP					
			08	04 BLK	SP					

CABLE: C096 CONNECTS: 101 TURBINE CONTROL PANEL
363 JB130 GAS FUEL MODULE

FROM LOCATION 101			CABLE		DEVICE			TO LOCATION 363		
INT LOC	TERM BD	TERM	PIN	COND	WIRE #	DEVICE	DESC	INT LOC	TERM BD	TERM
<R>	SHD	COM		0 1 SHD	E346	96GC-2	SHD		TBE	021
<R>	TBQC	007	0 1	0 1 ORN	346	96GC-2	BLU		TBE	019
<R>	TBQC	008	0 2	0 1 BLK	347	96GC-2	YEL		TBE	020
<R>	SHD	COM		0 2 SHD	E8378	96GC-2	SHD		TBE	024
<R>	QTBA	003	0 3	0 2 ORN	8378	96GC-2	RED		TBE	022
<R>	QTBA	004	0 4	0 2 BLK	8379	96GC-2	BLK		TBE	023
<T>	SHD	COM		0 3 SHD	E2390	65GC-1	SHD		TBE	027
<T>	QTBA	032	0 5	0 3 ORN	2390	65GC-1	ORN		TBE	025
<T>	QTBA	030	0 6	0 3 BLK	2391	65GC-1	BLU		TBE	026
<T>	SHD	COM		0 4 SHD	E2396	90SR-1	SHD		TBE	030
<T>	QTBA	029	0 7	0 4 ORN	2397	90SR-1	ORN		TBE	028
<T>	QTBA	027	0 8	0 4 BLK	2396	90SR-1	BLU		TBE	029
<R>	SHD	COM		0 5 SHD	E8318	65GC-2	SHD		TBE	033
<R>	QTBA	042	0 9	0 5 ORN	8318	65GC-2	GRN		TBE	031
<R>	QTBA	044	1 0	0 5 BLK	8319	65GC-2	YEL		TBE	032
<S>	SHD	COM		0 6 SHD	E8320	65GC-2	SHD		TBE	036
<S>	QTBA	042	1 1	0 6 ORN	8320	65GC-2	WHT		TBE	034
<S>	QTBA	044	1 2	0 6 BLK	8321	65GC-2	RED		TBE	035
<T>	SHD	COM		0 7 SHD	E8322	65GC-2	SHD		TBF	003
<T>	QTBA	042	1 3	0 7 ORN	8322	65GC-2	ORN		TBF	001
<T>	QTBA	044	1 4	0 7 BLK	8323	65GC-2	BLU		TBF	002
<R>	SHD	COM		0 8 SHD	E8324	96GC-3	SHD		TBF	009
<R>	TBQC	021	1 5	0 8 ORN	8324	96GC-3	BLU		TBF	007
<R>	TBQC	022	1 6	0 8 BLK	8325	96GC-3	YEL		TBF	008
<S>	SHD	COM		0 9 SHD	E8380	96GC-3	SHD		TBF	006
<S>	QTBA	007	1 7	0 9 ORN	8380	96GC-3	RED		TBF	004
<S>	QTBA	008	1 8	0 9 BLK	8381	96GC-3	BLK		TBF	005
<T>	SHD	COM		1 0 SHD	E8382	96GC-4	SHD		TBF	012
<T>	QTBA	007	1 9	1 0 ORN	8382	96GC-4	RED		TBF	010
<T>	QTBA	008	2 0	1 0 BLK	8383	96GC-4	BLK		TBF	011
<R>	SHD	COM		1 1 SHD	E8326	96GC-4	SHD		TBF	015
<R>	TBQC	0230	2 1	1 1 ORN	8326	96GC-4	BLU		TBF	013
<R>	TBQC	24	2 2	1 1 BLK	8327	96GC-4	YEL		TBF	014
<R>	SHD	COM		1 2 SHD	E9395	65GC-3	SHD		TBF	018

CABLE: C096 CONNECTS: 101 TURBINE CONTROL PANEL
363 JB130 GAS FUEL MODULE

FROM LOCATION 101			CABLE		DEVICE			TO LOCATION 363		
INT LOC	TERM BD	TERM	PIN	COND	WIRE #	DEVICE	DESC	INT LOC	TERM BD	TERM
<R>	QTBA	045	2 3	1 2 ORN	9395	65GC-3	GRN		TBF	016
<R>	QTBA	047	2 4	1 2 BLK	9396	65GC-3	YEL		TBF	017
<S>	SHD	COM		1 3 SHD	E9391	65GC-3	SHD		TBF	021
<S>	QTBA	045	2 5	1 3 ORN	9391	65GC-3	WHITE		TBF	019
<S>	QTBA	047	2 6	1 3 BLK	9392	65GC-3	RED		TBF	020
<T>	SHD	COM		1 4 SHD	E9371	65GC-3	SHD		TBF	024
<T>	QTBA	045	2 7	1 4 ORN	9371	65GC-3	ORN		TBF	022
<T>	QTBA	047	2 8	1 4 BLK	9372	65GC-3	BLU		TBF	023
<R>	SHD	COM		1 5 SHD	E8364	96GC-5	SHD		TBF	027
<R>	QTBA	009	2 9	1 5 ORN	8364	96GC-5	RED		TBF	025
<R>	QTBA	010	3 0	1 5 BLK	8365	96GC-5	BLK		TBF	026
<R>	SHD	COM		1 6 SHD	E8366	96GC-5	SHD		TBF	030
<R>	TBQC	025	3 1	1 6 ORN	8366	96GC-5	BLU		TBF	028
<R>	TBQC	026	3 2	1 6 BLK	8367	96GC-5	YEL		TBF	029
<S>	SHD	COM		1 7 SHD	E8368	96GC-6	SHD		TBF	033
<S>	QTBA	009	3 3	1 7 ORN	8368	96GC-6	RED		TBF	031
<S>	QTBA	010	3 4	1 7 BLK	8369	96GC-6	BLK		TBF	032
<R>	SHD	COM		1 8 SHD	E8370	96GC-6	SHD		TBF	036
<R>	TBQC	028	3 5	1 8 ORN	8370	96GC-6	BLU		TBF	034
<R>	TBQC	027	3 6	1 8 BLK	8371	96GC-6	YEL		TBF	035

CABLE: C102 CONNECTS: 334 PEECC MOTOR CONTROL CENTER
392 JB004 ACCESSORY BASE LEVEL 4

FROM LOCATION 334			CABLE		DEVICE			TO LOCATION 392		
INT LOC	TERM BD	TERM	PIN	COND	WIRE #	DEVICE	DESC	INT LOC	TERM BD	TERM
MCC1	QT-TB	T1	0 1	0 1 BLK	T1-QT	23QT-1,-2	T1		TBSS	0 0 1
MCC1	QT-TB	T2	0 2	0 2 BLK	T2-QT	23QT-1,-2	T2		TBSS	0 0 2
MCC1	QT-TB	T3	0 3	0 3 BLK	T3-QT	23QT-1,-2	T3		TBSS	0 0 3

CABLE: C117A CONNECTS: 125 JB055 TURBINE BASE LOW LEVEL
208 VIBRATION MONITOR PANEL

FROM LOCATION 125			CABLE		DEVICE			TO LOCATION 208		
INT LOC	TERM BD	TERM	PIN	COND	WIRE #	DEVICE	DESC	INT LOC	TERM BD	TERM
				0 1 SHD			SHD			
			0 1	0 1 ORN	SP					
			0 2	0 1 BLK	SP					
			0 3	0 1 RED	SP					
				0 2 SHD	E3240	39VS-11	SHD		ALLTB-1	004
	39VS-11	VDC	0 4	0 2 ORN	3242	39VS-11	-24V		ALLTB-1	001
	39VS-11	COM	0 5	0 2 BLK	3241	39VS-11	COM		ALLTB-1	002
	39VS-11	OUT	0 6	0 2 RED	3240	39VS-11	OUT		ALLTB-1	003
				0 3 SHD	E3243	39VS-12	SHD		ALLTB-1	008
	39VS-12	VDC	0 7	0 3 ORN	3245	39VS-12	-24V		ALLTB-1	005
	39VS-12	COM	0 8	0 3 BLK	3244	39VS-12	COM		ALLTB-1	006
	39VS-12	OUT	0 9	0 3 RED	3243	39VS-12	OUT		ALLTB-1	007
				0 4 SHD	E3320	77RP-11	SHD		ALLTB-1	044
	77RP-11	VDC	1 0	0 4 ORN	3322	77RP-11	-24V		ALLTB-1	041
	77RP-11	COM	1 1	0 4 BLK	3321	77RP-11	COM		ALLTB-1	042
	77RP-11	OUT	1 2	0 4 RED	3320	77RP-11	OUT		ALLTB-1	043
				0 5 SHD	E3340	96VC-11	SHD		ALLTB-1	036
	96VC-11	VDC	1 3	0 5 ORN	3342	96VC-11	-24V		ALLTB-1	033
	96VC-11	COM	1 4	0 5 BLK	3341	96VC-11	COM		ALLTB-1	034
	96VC-11	OUT	1 5	0 5 RED	3340	96VC-11	OUT		ALLTB-1	035
				0 6 SHD	E3343	96VC-12	SHD		ALLTB-1	040
	96VC-12	VDC	1 6	0 6 ORN	3345	96VC-12	-24V		ALLTB-1	037
	96VC-12	COM	1 7	0 6 BLK	3344	96VC-12	COM		ALLTB-1	038
	96VC-12	OUT	1 8	0 6 RED	3343	96VC-12	OUT		ALLTB-1	039

CABLE: C117B CONNECTS: 208 VIBRATION MONITOR PANEL
126 JB056 TURBINE BASE LOW LEVEL

FROM LOCATION 208			CABLE		DEVICE			TO LOCATION 127		
INT LOC	TERM BD	TERM	PIN	COND	WIRE #	DEVICE	DESC	INT LOC	TERM BD	TERM
				0 1 SHD			SHD			
			01	0 1 ORN	SP					
			02	0 1 BLK	SP					
			03	0 1 RED	SP					
				0 2 SHD			SHD			
			04	0 2 ORN	SP					
			05	0 2 BLK	SP					
			06	0 2 RED	SP					
				0 3 SHD	E3255	39VS-21	SHD		ALLTB-1	012
	39VS-21	VDC	07	0 3 ORN	3257	39VS-21	-24V		ALLTB-1	009
	39VS-21	COM	08	0 3 BLK	3256	39VS-21	COM		ALLTB-1	010
	39VS-21	OUT	09	0 3 RED	3255	39VS-21	OUT		ALLTB-1	011
				0 4 SHD	E3261	39VS-22	SHD		ALLTB-1	016
	39VS-22	VDC	10	0 4 ORN	3263	39VS-22	-24V		ALLTB-1	013
	39VS-22	COM	11	0 4 BLK	3262	39VS-22	COM		ALLTB-1	014
	39VS-22	OUT	12	0 4 RED	3261	39VS-22	OUT		ALLTB-1	015
				0 5 SHD	E3340	39VS-23	SHD		ALLTB-1	066
	39VS-23	VDC	13	0 5 ORN	3342	39VS-23	-24V		ALLTB-1	063
	39VS-23	COM	14	0 5 BLK	3341	39VS-23	COM		ALLTB-1	064
	39VS-23	OUT	15	0 5 RED	3340	39VS-23	OUT		ALLTB-1	065
				0 6 SHD	E3343	39VS-24	SHD		ALLTB-1	070
	39VS-24	VDC	16	0 6 ORN	3345	39VS-24	-24V		ALLTB-1	067
	39VS-24	COM	17	0 6 BLK	3344	39VS-24	COM		ALLTB-1	068
	39VS-24	OUT	18	0 6 RED	3343	39VS-24	OUT		ALLTB-1	069

CABLE: C117C CONNECTS: 127 JB085 LOAD GEAR COMPARTMENT LOW LEVEL
208 VIBRATION MONITOR PANEL

FROM LOCATION 127			CABLE		DEVICE			TO LOCATION 208		
INT LOC	TERM BD	TERM	PIN	COND	WIRE #	DEVICE	DESC	INT LOC	TERM BD	TERM
				0 1 SHD	E3273	39VS-31	SHD		ALLTB-1	074
	39VS-31	VDC	01	0 1 ORN	3275	39VS-31	-24V		ALLTB-1	071
	39VS-31	COM	02	0 1 BLK	3274	39VS-31	COM		ALLTB-1	072
	39VS-31	OUT	03	0 1 RED	3273	39VS-31	OUT		ALLTB-1	073
				0 2 SHD	E3276	39VS-32	SHD		ALLTB-1	078
	39VS-32	VDC	04	0 2 ORN	3278	39VS-32	-24V		ALLTB-1	075
	39VS-32	COM	05	0 2 BLK	3277	39VS-32	COM		ALLTB-1	076
	39VS-32	OUT	06	0 2 RED	3276	39VS-32	OUT		ALLTB-1	077
				03 SHD			SHD			
			07	03 ORN	SP					
			08	03 BLK	SP					
			09	03 RED	SP					

CABLE: C123 CONNECTS: 136 JB005B GENERATOR COMPARTMENT LEVEL 3
562 STATIC VOLTAGE REGULATOR--EX2000R

FROM LOCATION 489			CABLE		DEVICE			TO LOCATION 553		
INT LOC	TERM BD	TERM	PIN	COND	WIRE #	DEVICE	DESC	INT LOC	TERM BD	TERM
	TBC	0 2 1	0 1	0 1 BLK	859	EXC_FIELD	F1+		CTBA	0 0 1
	TBC	0 2 2	0 2	0 2 BLK	860	EXC_FIELD	F2-		CTBA	0 0 2
			0 3	0 3 BLK	SP					
			0 4	0 4 BLK	SP					
			0 5	0 5 BLK	SP					
			0 6	0 6 BLK	SP					

CABLE: C125 CONNECTS: 334 PEECC MOTOR CONTROL CENTER
392 JB004 ACCESSORY BASE LEVEL 4

FROM LOCATION 334			CABLE		DEVICE			TO LOCATION 392		
INT LOC	TERM BD	TERM	PIN	COND	WIRE #	DEVICE	DESC	INT LOC	TERM BD	TERM
	HA1-TB	T1	01	01 BLK	T1-HT3	23HT-3	T1		TBWW	0 0 4
	TA1-TB	T2	02	02 BLK	T2-HT3	23HT-3	T2		TBWW	0 0 5
			03	03 BLK	SP					
	HA3-TB	T2	04	04 BLK	T2-HA3	23HA-3	H1		TBWW	0 0 1
	HA3-TB	T3	05	05 BLK	T3-HA3	23HA-3	H2		TBWW	0 0 2

CABLE: C128 CONNECTS: 101 TURBINE CONTROL PANEL
231 JB019B TURBINE OFF BASE RACK LEVEL 3

FROM LOCATION 101			CABLE		DEVICE			TO LOCATION 231		
INT LOC	TERM BD	TERM	PIN	COND	WIRE #	DEVICE	DESC	INT LOC	TERM BD	TERM
			01	01 BLK	SP					
<CD>	DTBA	40	02	02 BLK	1567	26HT-1	C		TBA	0 0 2
<CD>	DTBA	39	03	03 BLK	1568	26HT-1	NC		TBA	0 0 3
<QD1>	DTBA	20	04	04 BLK	3569	26HT-3	C		TBA	0 0 4
<QD1>	DTBA	19	05	05 BLK	3570	26HT-3	NC		TBA	0 0 5
			06	06 BLK	SP					

CABLE: C135 CONNECTS: 284 FIRE PROTECTION PANEL
348 JB077A ACCESSORY BASE FP

FROM LOCATION 0 1 3			CABLE		DEVICE			TO LOCATION 348		
INT LOC	TERM BD	TERM	PIN	COND	WIRE #	DEVICE	DESC	INT LOC	TERM BD	TERM
				0 1 SHD	E2279	45FA/45FT	SHD			
	TBA	001	0 1	0 1 ORN	2279	45FA-1A	NO1		TBA	0 0 1
	TBA	002	0 2	0 1 BLK	2279	45FT-3A	NO1		TBA	0 0 5
				0 2 SHD	E2280	45FA/45FT	SHD			
	TBA	003	0 3	0 2 ORN	2280	45FA-1A	NO2		TBA	0 0 6
	TBA	004	0 4	0 2 BLK	2280	45FT-3A	NO2		TBA	0 1 0
				0 3 SHD	E2285	45FLC	SHD			
	TBA	009	0 5	0 3 ORN	2285	45FLC-20A	NO1		TBA	0 1 1
	TBA	010	0 6	0 3 BLK	2285	45FLC-21A	NO1		TBA	0 1 2
				0 4 SHD	E2286	45FLC	SHD			
	TBA	011	0 7	0 4 ORN	2286	45FLC-20A	NO2		TBA	0 1 3
	TBA	012	0 8	0 4 BLK	2286	45FLC-21A	NO2		TBA	0 1 4
				0 5 SHD	E5200	SLA/SLT	SHD			
	TBA	027	0 9	0 5 ORN	5200	SLA/SLT	RED		TBB	0 2 0
	TBA	028	1 0	0 5 BLK	5201	SLA/SLT	BLK		TBB	0 1 5
				0 6 SHD	E5202	SLLC-2A	SHD			
	TBA	025	1 1	0 6 ORN	5202	SLLC-2A	RED		TBB	0 1 0
	TBA	026	1 2	0 6 BLK	5203	SLLC-2A	BLK		TBB	0 0 7
				0 7 SHD			SHD			
			1 3	0 7 ORN	SP					
			1 4	0 7 BLK	SP					
				0 8 SHD			SHD			
			1 5	0 8 WHT	SP					
			1 6	0 8 BLK	SP					
				0 9 SHD			SHD			
			1 7	0 9 ORN	SP					
			1 8	0 9 BLK	SP					

CABLE: C136 CONNECTS: 284 FIRE PROTECTION PANEL
348 JB077A ACCESSORY BASE FP

FROM LOCATION 013			CABLE		DEVICE			TO LOCATION 348		
INT LOC	TERM BD	TERM	PIN	COND	WIRE #	DEVICE	DESC	INT LOC	TERM BD	TERM
				01 SHD	E2281	45FA/45FT	SHD			
	TBA	005	0 1	01 ORN	2281	45FA-1B	NO1		TBD	001
	TBA	006	0 2	01 BLK	2281	45FT-3B	NO1		TBD	005
				02 SHD	E2282	45FA/45FT	SHD			
	TBA	007	0 3	02 ORN	2282	45FA-1B	NO2		TBD	006
	TBA	008	0 4	02 BLK	2282	45FT-3B	NO2		TBD	010
				03 SHD	E2289	45FLC	SHD			
	TBA	013	0 5	03 ORN	2289	45FLC-20B	NO1		TBD	011
	TBA	014	0 6	03 BLK	2289	45FLC-21B	NO1		TBD	012
				04 SHD	E2290	45FLC	SHD			
	TBA	015	0 7	04 ORN	2290	45FLC-20B	NO2		TBD	013
	TBA	016	0 8	04 BLK	2290	45FLC-21B	NO2		TBD	014
				05 SHD	E5200	SLA/ALT	SHD			
	TBA	027	0 9	05 ORN	5200	SLA/ALT	RED+		TBB	016
	TBA	028	1 0	05 BLK	5201	SLA/ALT	BLK		TBB	011
				06 SHD	E5202	SLLC-2B	SHD			
	TBA	025	1 1	06 ORN	5202	SLLC-2B	RED+		TBB	008
	TBA	026	1 2	06 BLK	5203	SLLC-2B	BLK		TBB	005
				07 SHD			SHD			
			1 3	07 ORN	SP					
			1 4	07 BLK	SP					
				08 SHD			SHD			
			1 5	08 ORN	SP					
			1 6	08 BLK	SP					
				09 SHD			SHD			
			1 7	09 ORN	SP					
			1 8	09 BLK	SP					

CABLE: C145 CONNECTS: 208 VIBRATION MONITOR PANEL
325 JB163 GENERATOR COMPARTMENT LOW LEVEL

FROM LOCATION 1 0 1			CABLE		DEVICE			TO LOCATION 488		
INT LOC	TERM BD	TERM	PIN	COND	WIRE #	DEVICE	DESC	INT LOC	TERM BD	TERM
				01 SHD			SHD			
			01	01 ORN	SP					
			02	01 BLK	SP					
			03	01 RED	SP					
				02 SHD	SP		SHD			
			04	02 ORN	SP					
			05	02 BLK	SP					
			06	02 RED	SP					
	ALLTB-1	020		03 SHD	E3388	39VS-91	SHD			
	ALLTB-1	017	07	03 ORN	3390	39VS-91	-24V		39VS-91	VDC
	ALLTB-1	018	08	03 BLK	3389	39VS-91	COM		39VS-91	COM
	ALLTB-1	019	09	03 RED	3388	39VS-91	OUT		39VS-91	OUT
	ALLTB-1	024		04 SHD	E3391	39VS-92	SHD			
	ALLTB-1	021	10	04 ORN	3393	39VS-92	-24V		39VS-92	VDC
	ALLTB-1	022	11	04 BLK	3392	39VS-92	COM		39VS-92	COM
	ALLTB-1	023	12	04 RED	3391	39VS-92	OUT		39VS-92	OUT
	ALLTB-1	028		05 SHD	E3394	39VS-101	SHD			
	ALLTB-1	025	13	05 ORN	3396	39VS-101	-24V		39VS-101	VDC
	ALLTB-1	026	14	05 BLK	3395	39VS-101	COM		39VS-101	COM
	ALLTB-1	027	15	05 RED	3394	39VS-101	OUT		39VS-101	OUT
	ALLTB-1	032		06 SHD	E3397	39VS-102	SHD			
	ALLTB-1	029	16	06 ORN	3399	39VS-102	-24V		39VS-102	VDC
	ALLTB-1	030	17	06 BLK	3398	39VS-102	COM		39VS-102	COM
	ALLTB-1	031	18	06 RED	3397	39VS-102	OUT		39VS-102	OUT

CABLE: C148 CONNECTS: 146 METALCLAD SWITCHGEAR
562 STATIC VOLTAGE REGULATOR--EX2000R

FROM LOCATION 146			CABLE		DEVICE			TO LOCATION 562		
INT LOC	TERM BD	TERM	PIN	COND	WIRE #	DEVICE	DESC	INT LOC	TERM BD	TERM
	TBSC-G	001	0 1	01 BLK	754A	CT19A	01		PTCT	T5TB
	TBSC-G	002	0 2	02 BLK	751RA	CT19A	02		PTCT	6TB
	TBSC-G	003	0 3	03 BLK	754	CT19C	01		PTCT	9TB
	TBSC-G	004	0 4	04 BLK	751R	CT19C	02		PTCT	10TB

CABLE: C149 CONNECTS: 334 PEECC MOTOR CONTROL CENTER
441 JB131 GAS FUEL MODULE LEVEL 4

FROM LOCATION 146			CABLE		DEVICE			TO LOCATION 562		
INT LOC	TERM BD	TERM	PIN	COND	WIRE #	DEVICE	DESC	INT LOC	TERM BD	TERM
MCC1	VS1-TB	T1	0 1	01 BLK	T1-VS1	23VS-1	L1		TBA	013
	TBSC-G		0 2	02 BLK	SP					
MCC1	VS1-TB	T3	0 3	03 BLK	T3-VS1	23VS-1	L3		TBA	014

CABLE: C161 CONNECTS: 115 JB002 ACCESSORY BASE LEVEL-3
339 JB298 PEEC LEVEL-3

FROM LOCATION 115			CABLE		DEVICE			TO LOCATION 339		
INT LOC	TERM BD	TERM	PIN	COND	WIRE #	DEVICE	DESC	INT LOC	TERM BD	TERM
	TBF	0 1 0	0 1	01 BLK	2522	AC_LIGHTS	L		TBA	0 0 9
	TBF	0 1 1	0 2	02 BLK	2503-2	AC_LIGHTS	N		TBA	0 1 0
			0 3	3 BLK	SP					
			0 4	4 BLK	SP					
	TBE	0 0 5	0 5	5 BLK	8912	23CR-1	H1		TBB	0 0 5
	TBE	0 0 6	0 6	6 BLK	8913	23CR-1	H2		TBB	0 0 6
	TBE	0 0 7	0 7	7 BLK	8962	23HQ-1	H1		TBB	0 0 7
	TBE	0 0 8	0 8	8 BLK	8963	23HQ-1	H2		TBB	0 0 8
			0 9	9 BLK	SP					
			1 0	10 BLK	SP					
	TBE	0 1 1	1 1	11 BLK	8972	23QA-1	H1		TBB	0 1 1
	TBE	0 1 2	1 2	12 BLK	8973	23QA-1	H2		TBB	0 1 2

NOTES FOR CABLE C161

NUMBER	NOTES
1	ADD A 3 TO 4 INCH WHITE SLEEVE, PER NEC CODE, TO INDICATE AC NEUTRAL ON CONDUCTOR 02

CABLE: C171 CONNECTS: 227 HAZARDOUS GAS MONITOR
234 JB020B TURBINE OFF BASE RACK LOW LEVEL

FROM LOCATION 227			CABLE		DEVICE			TO LOCATION 234		
INT LOC	TERM BD	TERM	PIN	COND	WIRE #	DEVICE	DESC	INT LOC	TERM BD	TERM
	TBW	0 1 2		01 SHD	E5341	45HT-1	SHD		TBC	0 1 5
	TBW	0 1 1	0 1	01 ORN	5343	45HT-1	03		TBC	0 1 4
	TBW	0 0 9	0 2	01 BLK	5341	45HT-1	01		TBC	0 1 2
	TBW	0 1 0	0 3	01 RED	5342	45HT-1	0 2		TBC	0 1 3
	TBX	0 0 4		02 SHD	E5344	45HT-2	SHD		TBC	0 1 9
	TBX	0 0 3	0 4	02 ORN	5346	45HT-2	03		TBC	0 1 8
	TBX	0 0 1	0 5	02 BLK	5344	45HT-2	02		TBC	0 1 6
	TBX	0 0 2	0 6	02 RED	5345	45HT-2	01		TBC	0 1 7
				03 SHD						
			0 7	03 ORN						
			0 8	03 BLK						
			0 9	03 RED						

CABLE:C172 CONNECTS: 114 JB001 ACCESSORY BASE LOW LEVEL
201 LIMIT AMP

FROM LOCATION 114			CABLE		DEVICE			TO LOCATION 201		
INT LOC	TERM BD	TERM	PIN	COND	WIRE #	DEVICE	DESC	INT LOC	TERM BD	TERM
				01 SHD			SHD			
			0 1	01 ORN	SP					
			0 2	01 BLK	SP					
			0 3	01 RED	SP					
				02 SHD			SHD			
			0 4	02 ORN	SP					
			0 5	02 BLK	SP					
			0 6	02 RED	SP					
				03 SHD			SHD			
			0 7	03 ORN	SP					
			0 8	03 BLK	SP					
			0 9	03 RED	SP					
	TBD	0 1 6		04 SHD	E9742	ET-CRS-3/R	SHD			
	TBD	0 1 3	1 0	04 ORN	9742	ET-CRS-3/R	R43			
	TBD	0 1 4	1 1	04 BLK	9743	ET-CRS-3/R	R44			

CABLE:C172 CONNECTS: 114 JB001 ACCESSORY BASE LOW LEVEL
201 LIMIT AMP

FROM LOCATION 114			CABLE		DEVICE			TO LOCATION 201		
INT LOC	TERM BD	TERM	PIN	COND	WIRE #	DEVICE	DESC	INT LOC	TERM BD	TERM
	TBD	0 1 5	1 2	04 RED	9744	ET-CRS-3/R	R53			
	TBD	0 2 0		05 SHD	E9696	ET-CRS-2/R	SHD			
	TBD	0 1 7	1 3	05 ORN	9696	ET-CRS-2/R	R24			
	TBD	0 1 8	1 4	05 BLK	9697	ET-CRS-2/R	R33			
	TBD	0 1 9	1 5	05 RED	9698	ET-CRS-2/R	R34			
	TBE	0 0 4		06 SHD	E9693	ET-CRS-1/R	SHD			
	TBE	0 0 1	1 6	06 ORN	9693	ET-CRS-1/R	R13			
	TBE	0 0 2	1 7	06 BLK	9694	ET-CRS-1/R	R14			
	TBE	0 0 3	1 8	06 RED	9695	ET-CRS-1/R	R23			

NOTES FOR CABLE C172

NUMBER	NOTES
1	CONNECTIONS TO CUSTOMER EQUIPMENT ARE TO BE DETRMINED AT SITE.

CABLE:C182 CONNECTS: 101 TURBINE CONTROL PANEL
231 JB019B TURBINE OFF BASE RACK LEVEL 3

FROM LOCATION 101			CABLE		DEVICE			TO LOCATION 231		
INT LOC	TERM BD	TERM	PIN	COND	WIRE #	DEVICE	DESC	INT LOC	TERM BD	TERM
			01	01 BLK	SP					
			02	02 BLK	SP					
			03	03 BKL	SP					
			04	04 BLK	SP					
	HTB1	003	05	05 BLK	6233	20TW-3	0 2		TBA	0 1 1
	HTB1	004	06	06 BLK	6232	20TW-3	0 3		TBA	0 1 2
			07	07 BLK	SP					
			08	08 BLK	SP					
			09	09 BLK	SP					
	HTB1	001	10	10 BLK	2179	20TW-1	0 2		TBA	0 1 0
	HTB1	002	11	11 BLK	2185	20TW-1	0 3		TBA	0 1 7
	HTB1	009	12	12 BLK	572-3	20TW-1,3	0 1		TBA	0 1 8

CABLE: C190 CONNECTS: 128 EXHAUST FRAME BLOWER 88TK-1
339 JB298 PEECC LEVEL 3

FROM LOCATION 128			CABLE		DEVICE			TO LOCATION 339		
INT LOC	TERM BD	TERM	PIN	COND	WIRE #	DEVICE	DESC	INT LOC	TERM BD	TERM
	23TK-1	H1	01	01 BLK	9578	23TK-1	H1		TBD	0 0 9
	23TK-1	H2	02	02 BLK	9579	23TK-1	H2		TBD	0 1 0

CABLE:C191 CONNECTS: 101 TURBINE CONTROL PANEL
128 EXHAUST FRAME BLOWER 88TK-1

FROM LOCATION 101			CABLE		DEVICE			TO LOCATION 128		
INT LOC	TERM BD	TERM	PIN	COND	WIRE #	DEVICE	DESC	INT LOC	TERM BD	TERM
<QD1>	DTBB	0 5 6	0 1	01 BLK	107	63TK-1	C		63TK-1	C
<QD1>	DTBB	0 5 5	0 2	02 BLK	2160	63TK-1	NO		63TK-1	NO
			0 3	03 BLK	SP					

CABLE: C192 CONNECTS: 129 EXHAUST FRAME BLOWER 88TK-2
339 JB298 PEECC LEVEL 3

FROM LOCATION 129			CABLE		DEVICE			TO LOCATION 339		
INT LOC	TERM BD	TERM	PIN	COND	WIRE #	DEVICE	DESC	INT LOC	TERM BD	TERM
	23TK-2	H1	0 1	01 BLK	9596	23TK-2	H1		TBD	0 1 1
	23TK-2	H2	0 2	02 BLK	9597	23TK-2	H2		TBD	0 1 2

CABLE:C193 CONNECTS: 101 TURBINE CONTROL PANEL
129 EXHAUST FRAME BLOWER 88TK-2

FROM LOCATION 101			CABLE		DEVICE			TO LOCATION 129		
INT LOC	TERM BD	TERM	PIN	COND	WIRE #	DEVICE	DESC	INT LOC	TERM BD	TERM
<QD1>	DTBB	0 5 8	0 1	01 BLK	107	63TK-2	C		63TK-2	C
<QD1>	DTBB	0 5 7	0 2	02 BLK	2161	63TK-2	NO		63TK-2	NO
			0 3	03 BLK	SP					

CABLE:C199 CONNECTS: 122 TURBINE ROOF MOUNTED DEVICES
334 PEECC MOTOR CONTROL CENTER

FROM LOCATION 122			CABLE		DEVICE			TO LOCATION 334		
INT LOC	TERM BD	TERM	PIN	COND	WIRE #	DEVICE	DESC	INT LOC	TERM BD	TERM
	88BT-1	T1	0 1	01 BLK	T1-BT1	88BT-1	T1	MCC1	BT1-TB	T1
	88BT-1	T2	0 2	02 BLK	T2-BT1	88BT-1	T2	MCC1	BT1-TB	T2
	88BT-1	T3	0 3	03 BLK	T3-BT1	88BT-1	T3	MCC1	BT1-TB	T3

CABLE:C199A CONNECTS: 122 TURBINE ROOF MOUNTED DEVICES
339 JB298 PEECC LEVEL 3

FROM LOCATION 122			CABLE		DEVICE			TO LOCATION 339		
INT LOC	TERM BD	TERM	PIN	COND	WIRE #	DEVICE	DESC	INT LOC	TERM BD	TERM
	23BT-1	H1	0 1	01 BLK	3575	23BT-1	H1		TBD	0 0 1
	23BT-1	H2	0 2	02 BLK	3576	23BT-1	H2		TBD	0 0 2

CABLE:C200 CONNECTS: 101 TURBINE CONTROL PANEL
233 JB020A TURBINE OFF BASE RACK LOW LEVEL

FROM LOCATION 101			CABLE		DEVICE			TO LOCATION 233		
INT LOC	TERM BD	TERM	PIN	COND	WIRE #	DEVICE	DESC	INT LOC	TERM BD	TERM
<R>	TBQA	013	0 1	01 YEL	8437	AA-TI-1A	YEL		TBB	007
<R>	TBQA	014	0 2	01 RED	8438	AA-TI-1A	RED		TBB	008
			0 3	02 YEL	SP					
			0 4	02 RED	SP					
			0 5	3 YEL	SP					
			0 6	3 RED	SP					
			0 7	4 YEL	SP					
			0 8	4 RED	SP					
<R>	TBQA	021	0 9	5 YEL	497	LT-TH-1A	YEL		TBB	0 0 9
<R>	TBQA	022	1 0	5 RED	498	LT-TH-1A	RED		TBB	0 1 0
<C>	TBQA	041	1 1	6 YEL	1453	LT-TH-1B	YEL		TBF	0 0 7
<C>	TBQA	042	1 2	6 RED	1454	LT-TH-1B	RED		TBF	0 0 8
<C>	TBQA	045	1 3	7 YEL	473	LT-B1D-A	YEL		TBB	0 1 3
<C>	TBQA	046	1 4	7 RED	474	LT-B1D-A	RED		TBB	0 1 4
<R>	TBQA	017	1 5	8 YEL	461	CT-DA-1	YEL		TBB	0 1 5
<R>	TBQA	018	1 6	8 RED	462	CT-DA-1	RED		TBB	0 1 6
<R>	TBQA	019	1 7	9 YEL	467	CT-IF-1A	YEL		TBB	0 1 7
<R>	TBQA	020	1 8	9 RED	468	CT-IF-1A	RED		TBB	0 1 8

CABLE:C200 CONNECTS: 101 TURBINE CONTROL PANEL
233 JB020A TURBINE OFF BASE RACK LOW LEVEL

FROM LOCATION 101			CABLE		DEVICE			TO LOCATION 233		
INT LOC	TERM BD	TERM	PIN	COND	WIRE #	DEVICE	DESC	INT LOC	TERM BD	TERM
<R>	TBQA	049	1 9	10 YEL	1473	CT-IF-2A	YEL		TBB	0 1 9
<R>	TBQA	050	2 0	10 RED	1474	CT-IF-2A	RED		TBB	0 2 0
<R>	TBQA	079	2 1	11 YEL	2465	CT-IF-2B	YEL		TBE	0 0 1
<R>	TBQA	080	2 2	11 RED	2466	CT-IF-2B	RED		TBE	0 0 2
<C>	TBQA	009	2 3	12 YEL	443	TT-WS1AO-1	YEL		TBE	0 0 3
<C>	TBQA	010	2 4	12 RED	444	TT-WS1AO-1	RED		TBE	0 0 4
<C>	TBQA	001	2 5	13 YEL	459	TT-WS1FI-1	YEL		TBE	0 0 5
<C>	TBQA	002	2 6	13 RED	460	TT-WS1FI-1	RED		TBE	0 0 6
			2 7	14 YEL	SP					
			2 8	14 RED	SP					
<C>	TBQA	017	2 9	15 YEL	451	TT-WS2AO-1	YEL		TBE	0 0 9
<C>	TBQA	018	3 0	15 RED	452	TT-WS2AO-1	RED		TBE	0 1 0
<C>	TBQA	013	3 1	16 YEL	447	TT-WS2AO-1	YEL		TBE	0 1 1
<C>	TBQA	014	3 2	16 RED	448	TT-WS2AO-1	RED		TBE	0 1 2
<C>	TBQA	021	3 3	17 YEL	1435	TT-WS3AO-1	YEL		TBF	0 0 9
<C>	TBQA	022	3 4	17 RED	1436	TT-WS3AO-1	RED		TBF	0 1 0
			3 5	18 YEL	SP					
			3 6	18 RED	SP					

CABLE: C201 CONNECTS: 101 TURBINE CONTROL PANEL
390 JB034 TURBINE ROOF LOW LEVEL

FROM LOCATION 101			CABLE		DEVICE			TO LOCATION 390		
INT LOC	TERM BD	TERM	PIN	COND	WIRE #	DEVICE	DESC	INT LOC	TERM BD	TERM
				01 SHD			SHD			
			0 1	01 ORN	SP					
			0 2	01 BLK	SP					
<R>	SHD	COM		02 SHD	E386	96CD-1A	SHD		TBA	0 0 6
<R>	TBQB	0 0 1	0 3	02 ORN	387	96CD-1A	SIG +		TBA	0 0 4
<R>	TBQB	0 0 3	0 4	02 BLK	386	96CD-1A	SIG -		TBA	0 0 5
<R>	SHD	COM		03 SHD	E8336	96CD-1B	SHD		TBA	0 1 2
<R>	TBQB	0 0 5	0 5	03 ORN	8336	96CD-1B	SIG +		TBA	0 1 0
<R>	TBQB	0 0 7	0 6	03 BLK	8447	96CD-1B	SIG -		TBA	0 1 1
<R>	SHD	COM		04 SHD	E8340	96CD-1C	SHD		TBA	0 1 8
<R>	TBQB	0 0 9	0 7	04 ORN	8340	96CD-1C	SIG +		TBA	0 1 6
<R>	TBQB	0 1 1	0 8	04 BLK	8341	96CD-1C	SIG -		TBA	0 1 7

CABLE: C216 CONNECTS: 339 JB298 PEECC LEVEL 3
363 JB130 GAS FUEL MODULE

FROM LOCATION 339			CABLE		DECVICE			TO LOCATION 363		
INT LOC	TERM BD	TERM	PIN	COND	WIRE #	DEVICE	DESC	INT LOC	TERM BD	TERM
	TBN	0 0 9	0 1	01 BLK	552	AC_LIGHTS	L		TBJ	0 0 5
	TBN	0 1 0	0 2	02 BLK	2503-12	AC_LIGHTS	N		TBJ	0 0 4
			0 3	03 BLK	SP					

NOTES FOR CABLE C216

NUMBER NOTES

1 ADD A 3 TO 4 INCH WHITE SLEEVE, PER NEC CODE, TO INDICATE AC NEUTRAL ON CONDUCTOR 02

CABLE: C217 CONNECTS: 339 JB298 PEECC LEVEL 3
363 JB130 GAS FUEL MODULE

FROM LOCATION 339			CABLE		DEVICE			TO LOCATION 363		
INT LOC	TERM BD	TERM	PIN	COND	WIRE #	DEVICE	DESC	INT LOC	TERM BD	TERM
	TBK	0 0 4	0 1	01 BLK	926	DL-51	POS		TBJ	0 1 5
	TBK	0 1 0	0 2	02 BLK	927	DL-51	NEG		TBJ	0 1 6

CABLE: C219 CONNECTS: 136 JB005B GENERATOR COMPARTMENT LEVEL 3
339 JB298 PEECC LEVEL 3

FROM LOCATION 136			CABLE		DEVICE			TO LOCATION 339		
INT LOC	TERM BD	TERM	PIN	COND	WIRE #	DEVICE	DESC	INT LOC	TBC	TERM
	TBA	0 0 1	0 1	01 BLK	926A	DCL-15,-33	POS		TBC	001
	TBA	0 0 2	0 2	02 BLK	927A	DCL-15,-33	NEG		TBC	002
	TBA	0 0 3	0 3	03 BLK	544	AR-17	L		TBC	003
	TBA	0 0 4	0 4	04 BLK	2503-4	AR-17	N		TBC	004
	TBA	0 0 5	0 5	05 BLK	542	AL-33	L		TBC	005
	TBA	0 0 6	0 6	06 BLK	2503-2	AL-33	N		TBC	006
	TBC	0 0 7	0 7	07 BLK	542A	AR-65/AL89	L		TBC	005
	TBC	0 0 8	0 8	08 BLK	2503-2A	AR-65/AL89	N		TBC	006
			0 9	09 BLK	SP					
			1 0	10 BLK	SP					
			1 1	11 BLK	SP					
			1 2	12 BLK	SP					

NOTES FOR CABLE C219

NUMBER NOTES

1 ADD 3 TO 4 INCH WHITE SLEEVE, PER NEC CODE, TO INDICATE AC NEUTRAL ON CONDUCTOR 04, 06 & 08.

2 ADD THE FOLLOWING JUMPERS IN (136) JB005B GENERATOR COMPARTMENT LEVEL 3:
TBC-(011) TO TBA-(013) TBA-(012) TO TBA-(014)
TBA-(019) TO TBA-(021) TBA-(020) TO TBA-(022)
TBC-(001) TO TBC-(004) TBC-(002) TO TBC-(005) TBC-(003) TO TBC-(005)

CABLE: C235A CONNECTS: 102 GENERATOR CONTROL PANEL
146 METAL CLAD SWITCHGEAR

FROM LOCATION 102			CABLE		DEVICE			TO LOCATION 145		
INT LOC	TERM BD	TERM	PIN	COND	WIRE #	DEVICE	DESC	INT LOC	TERM BD	TERM
	TBG	0 0 9	0 1	01 BLK	708	CT21	0 1		TBSC-H	0 0 1
	TBG	0 1 0	0 2	02 BLK	709	CT22	0 1		TBSC-H	0 0 2
	TBG	0 1 1	0 3	03 BLK	710	CT23	0 1		TBSC-H	0 0 3
	TBG	0 1 2	0 4	04 BLK	707	CT_COM	0 2		TBSC-H	0 0 4
	TBF	0 0 5	0 5	05 BLK	2701	CT60	0 1		TBSC-P	0 0 1
	TBF	0 0 6	0 6	06 BLK	2702	CT61	0 1		TBSC-P	0 0 2
	TBF	0 0 7	0 7	07 BLK	2703	CT62	0 1		TBSC-P	0 0 3
	TBF	0 0 8	0 8	08 BLK	2704	CT_COM	0 2		TBSC-P	0 0 4
			0 9	09 BLK	SP					
			1 0	10 BLK	SP					
			1 1	11 BLK	SP					
			1 2	12 BLK	SP					

CABLE: C235B CONNECTS: 102 GENERATOR CONTROL PANEL
146 METAL CLAD SWITCHGEAR

FROM LOCATION 102			CABLE		DEVICE			TO LOCATION 146		
INT LOC	TERM BD	TERM	PIN	COND	WIRE #	DEVICE	DESC	INT LOC	TERM BD	TERM
	TBF	0 0 9	0 1	01 BLK	2708	CT48	0 1		TBSC-N	0 0 1
	TBF	0 1 0	0 2	02 BLK	2709	CT49	0 1		TBSC-N	0 0 2
	TBF	0 1 1	0 3	03 BLK	2710	CT50	0 1		TBSC-N	0 0 3
	TBF	0 1 2	0 4	04 BLK	2711	CT_COM	0 2		TBSC-N	0 0 4
			0 5	05 BLK	SP					
			0 6	06 BLK	SP					
			0 7	07 BLK	SP					
			0 8	08 BLK	SP					
	TBG	0 0 5	0 9	09 BLK	1704	CT27	0 1		TBSC-M	0 0 1
	TBG	0 0 6	1 0	10 BLK	1705	CT28	0 1		TBSC-M	0 0 2
	TBG	0 0 7	1 1	11 BLK	1706	CT29	0 1		TBSC-M	0 0 3
	TBG	0 0 8	1 2	12 BLK	1707	CT_COM	0 2		TBSC-M	0 0 4

CABLE: C235C CONNECTS: 108 AUXILIARY RELAY PANEL
146 METAL CLAD SWITCHGEAR

FROM LOCATION 108			CABLE		DEVICE			TO LOCATION 146		
INT LOC	TERM BD	TERM	PIN	COND	WIRE #	DEVICE	DESC	INT LOC	TERM BD	TERM
	TBG	0 0 9	0 1	01 BLK	1718	CT24	0 1		TBSC-L	0 0 1
	TBG	0 1 0	0 2	02 BLK	1719	CT25	0 1		TBSC-L	0 0 2
	TBG	0 1 1	0 3	03 BLK	1720	CT26	0 1		TBSC-L	0 0 3
	TBG	0 1 2	0 4	04 BLK	1721	CT_COM	0 2		TBSC-L	0 0 4
			0 5	05 BLK	SP					
			0 6	06 BLK	SP					
			0 7	07 BLK	SP					
			0 8	08 BLK	SP					
			0 9	09 BLK	SP					
			1 0	10 BLK	SP					
			1 1	11 BLK	SP					
			1 2	12 BLK	SP					

CABLE: C236A CONNECTS: 102 GENERATOR CONTROL PANEL
581 JB005N GEN. NEUTRAL ACCESSORIES COMP. LEVEL 3

FROM LOCATION 102			CABLE		DEVICE			TO LOCATION 581		
INT LOC	TERM BD	TERM	PIN	COND	WIRE #	DEVICE	DESC	INT LOC	TERM BD	TERM
			0 1	01 BLK	SP					
			0 2	02 BLK	SP					
	TBE	0 0 5	0 3	03 BLK	1713	CT01	0 1		TBSC-A	001
	TBE	0 0 6	0 4	04 BLK	1712	CT02	0 1		TBSC-A	002
	TBE	0 0 7	0 5	05 BLK	1711	CT03	0 1		TBSC-A	003
	TBE	0 0 8	0 6	06 BLK	1710	CT_COM	0 2		TBSC-A	004
	TBE	0 0 1	0 7	07 BLK	714	CT04	0 1		TBSC-B	001
	TBE	0 0 2	0 8	08 BLK	715	CT05	0 1		TBSC-B	002
	TBE	0 0 3	0 9	09 BLK	716	CT06	0 1		TBSC-B	003
	TBE	0 0 4	1 0	10 BLK	717	CT_COM	0 2		TBSC-B	004
	TBD	0 0 3	1 1	11 BLK	701	NGR	0 1		TBR	001
	TBD	0 0 4	1 2	12 BLK	700	NGR	0 2		TBR	002

CABLE: C236B CONNECTS: 102 GENERATOR CONTROL PANEL
581 JB005N GEN. NEUTRAL ACCESSORIES COMP. LEVEL 3

FROM LOCATION 102			CABLE		DEVICE			TO LOCATION 581		
INT LOC	TERM BD	TERM	PIN	COND	WIRE #	DEVICE	DESC	INT LOC	TERM BD	TERM
			0 1	01 BLK	SP					
			0 2	02 BLK	SP					
	TBD	0 0 9	0 3	03 BLK	704	CT07	0 1		TBSC-C	0 0 1
	TBD	0 1 0	0 4	04 BLK	705	CT08	0 1		TBSC-C	0 0 2
	TBD	0 1 1	0 5	05 BLK	706	CT09	0 1		TBSC-C	0 0 3
	TBD	0 1 2	0 6	06 BLK	703	CT_COM	0 2		TBSC-C	0 0 4
			0 7	07 BLK	SP					
			0 8	08 BLK	SP					
			0 9	09 BLK	SP					
			1 0	10 BLK	SP					
			1 1	11 BLK	SP					
			1 2	12 BLK	SP					

CABLE: C236C CONNECTS: 102 GENERATOR CONTROL PANEL
146 METALCLAD SWITCHGEAR

FROM LOCATION 102			CABLE		DEVICE			TO LOCATION 146		
INT LOC	TERM BD	TERM	PIN	COND	WIRE #	DEVICE	DESC	INT LOC	TERM BD	TERM
	TBF	0 0 1	0 1	01 BLK	1107/4704	CT30	0 1		TBSC-R	0 0 1
	TBF	0 0 2	0 2	02 BLK	1106/4705	CT31	0 1		TBSC-R	0 0 2
	TBF	0 0 3	0 3	03 BLK	1105/4706	CT32	0 1		TBSC-R	0 0 3
	TBF	0 0 4	0 4	04 BLK	1104/4704	CT_COM	0 2		TBSC-R	0 0 4
			0 5	05 BLK	SP					
			06	06 BLK	SP					
			07	07 BLK	SP					
			08	08 BLK	SP					
			09	09 BLK	SP					
			10	10 BLK	SP					
			11	11 BLK	SP					
			12	12 BLK	SP					

CABLE: C237 CONNECTS: 146 METALCLAD SWITCHGEAR
334 PEECC MOTOR CONTROL CENTER

FROM LOCATION 146			CABLE		DEVICE			TO LOCATION 334		
INT LOC	TERM BD	TERM	PIN	COND	WIRE #	DEVICE	DESC	INT LOC	TERM BD	TERM
	TBC237	0 0 1	0 1	01 BLK	912	125VDC	POS	DC MCC	DC_BKR	07A
	TBC237	0 0 2	0 2	02 BLK	913	125VDC	NEG	DC MCC	DC_BKR	07B

CABLE: C249 CONNECTS: 339 JB298 PEECC LEVEL 3
581 JB005N GEN. NEUTRAL ACCESSORIES COMP. LEVEL 3

FROM LOCATION 339			CABLE		DEVICE			TO LOCATION 591		
INT LOC	TERM BD	TERM	PIN	COND	WIRE #	DEVICE	DESC	INT LOC	TERM BD	TERM
	TBV	007	0 1	01 BLK	546	23HG-20	L		HTR	0 0 3
	TBV	008	0 2	02 BLK	2503-6	23HG-20	N		HTR	0 0 4
			0 3	03 BLK	SP					

NOTES FOR CABLE C249

NUMBER	NOTES
1	ADD A 3 TO 4 INCH WHITE SLEEVE, PER NEC CODE, TO INDICATE AC NEUTRAL ON CONDUCTOR 02.

CABLE: C251 CONNECTS: 334 PEECC MOTOR CONTROL CENTER
392 JB004 ACCESS0RY BASE LEVEL 4

FROM LOCATION 334			CABLE		DEVICE			TO LOCATION 392		
INT LOC	TERM BD	TERM	PIN	COND	WIRE #	DEVICE	DESC	INT LOC	TERM BD	TERM
MCC2	HA-TB	T1	0 1	01 BLK	T1-HA	23HA-1,-2	T1		TBTT	0 0 1
MCC2	HA-TB	T2	0 2	02 BLK	T2-HA	23HA-1,-2	T2		TBTT	0 0 2
MCC2	HA-TB	T3	0 3	03 BLK	T3-HA	23HA-1,-2	T3		TBTT	0 0 3

CABLE: C256 CONNECTS: 101 TURBINE CONTROL PANEL
230 JB019A TURBINE OFF BASE RACK LEVEL 3

FROM LOCATION 101			CABLE		DEVICE			TO LOCATION 230		
INT LOC	TERM BD	TERM	PIN	COND	WIRE #	DEVICE	DESC	INT LOC	TERM BD	TERM
<QD1>	DTBD	0 6 6	0 1	01 BLK	178	95SG-1,-10	POS		TBB	0 1 8
<QD1>	DTBD	0 6 5	0 2	02 BLK	572-1	95SG-1,-10	NEG		TBB	0 1 9
			0 3	03 BLK	SP					

CABLE: C257 CONNECTS: 101 TURBINE CONTROL PANEL
231 JB019A TURBINE OFF BASE RACK LEVEL 3

FROM LOCATION 101			CABLE		DEVICE			TO LOCATION 231		
INT LOC	TERM BD	TERM	PIN	COND	WIRE #	DEVICE	DESC	INT LOC	TERM BD	TERM
<CD>	DTBA	048	01	01 BLK	107	P125VDC	COM		TBD	0 0 3
<CD>	DTBA	047	02	02 BLK	2267	26BT-2	NC		TBC	0 0 2
<QD1>	DTBA	055	03	03 BLK	114	33CB-1	NO		TBC	0 0 3
<QD1>	DTBA	057	04	04 BLK	115	33CB-2	NO		TBC	0 0 4
			05	05 BLK	SP					
			06	06 BKL	SP					
			07	07 BLK	SP					
			08	08 BLK	SP					
			09	09 BLK	SP					
			10	10 BLK	SP					
			11	11 BLK	SP					
			12	12 BLK	SP					

NOTES FOR CABLE C257

NUMBER NOTES

1 CONDUCTOR 01 (107) IS THE COMMON FOR THE SIGNALS ON CONDUCTORS 02 THRU 04.

CABLE: C270 CONNECTS: 115 JB002 ACCESSORY BASE LEVEL 3
339 JB298 PEECC LEVEL 3

FROM LOCATION 115			CABLE		DEVICE			TO LOCATION 339		
INT LOC	TERM BD	TERM	PIN	COND	WIRE #	DEVICE	DESC	INT LOC	TERM BD	TERM
			0 1	01 BLK	SP					
	TBF	0 0 1	0 2	02 BLK	8548	33TM-8	2 7		TBA	0 0 1
	TBF	0 0 2	0 3	03 BLK	8547	33TM-7	2 4		TBA	0 0 2
	TBF	0 0 3	0 4	04 BLK	8556	33TM-4	1 0		TBA	0 0 3
	TBF	0 0 4	0 5	05 BLK	8558	33TM-2	0 4		TBA	0 0 4
	TBF	0 0 5	0 6	06 BLK	8552	33TM-1	0 1		TBA	0 0 5
	TBF	0 1 2	0 7	07 BLK	926A	DC-03	POS		TBA	0 0 7
	TBF	0 1 3	0 8	08 BLK	927A	DC-03	NEG		TBA	0 0 8
			0 9	09 BLK	SP					
			1 0	10 BLK	SP					
	TBF	0 1 8	1 1	11 BLK	1539	26QL-1	NC			0 1 1
	TBF	0 1 9	1 2	12 BLK	1540	26QL-1	C			0 1 2

CABLE: C285 CONNECTS: 101 TURBINE CONTROL PANEL
363 JB130 GAS GUEL MODULE

FROM LOCATION 101			CABLE		DEVICE			TO LOCATION 363		
INT LOC	TERM BD	TERM	PIN	COND	WIRE #	DEVICE	DESC	INT LOC	TERM BD	TERM
<R>	TBQA	025	01	01 YEL	9421	FT-GC-1	SIG +		TBG	0 1 9
<R>	TBQA	026	02	01 RED	9422	FT-GC-1	SIG -		TBG	0 2 0
<R>	TBQA	055	03	02 YEL	9423	FT-GC-2	SIG +		TBG	0 2 1
<R>	TBQA	056	04	02 RED	9424	FT-GC-2	SIG -		TBG	0 2 2
<R>	TBQA	085	05	03 YEL	9425	FT-GC-3	SIG +		TBG	0 2 3
<R>	TBQA	086	06	03 RED	9426	FT-GC-3	SIG -		TBG	0 2 4

CABLE: C401 CONNECTS: 183 AUXILARY POWER TRANSFORMER
254 CUSTOMER DEVICES--PANELS

FROM LOCATION 183			CABLE		DEVICE			TO LOCATION 254		
INT LOC	TERM BD	TERM	PIN	COND	WIRE #	DEVICE	DESC	INT LOC	TERM BD	TERM
	AC_BKR_F5	L1	0 1	01 BLK	L1	3PH_SUPPLY	T1		480V SUPPLY	L1A
	AC_BKR_F5	L2	0 2	02 BLK	L2	3PH_SUPPLY	T2		480V SUPPLY	L2A
	AC_BKR_F5	L3	0 3	03 BLK	L3	3PH_SUPPLY	T3		480V SUPPLY	L3A

NOTES FOR CABLE C401

NUMBER NOTES

1 CONNECTIONS TO CUSTOMER EQUIPMENT ARE TO BE DETERMINED AT SITE.

CABLE: C402 CONNECTS: 334 PEECC MOTOR CONTROL CENTER
939 UNIT AREA OUTDOOR LIGHTING

FROM LOCATION 334			CABLE		DEVICE			TO LOCATION 939		
INT LOC	TERM BD	TERM	PIN	COND	WIRE #	DEVICE	DESC	INT LOC	TERM BD	TERM
MCC1	AC_BKR	8A	0 1	01 BLK	L1	480VAC SUPPLY	L1			
MCC1	AC_BKR	8B	0 2	02 BLK	L2	480VAC SUPPLY	L2			
MCC1	AC_BKR	8C	0 3	03 BLK	L3	480VAC SUPPLY	L3			

NOTES FOR CABLE C402

NUMBER NOTES

1 CONNECTIONS TO CUSTOMER EQUIPMENT ARE TO BE DETERMINED AT SITE.

CABLE: C403 CONNECTS: 334 PEECC MOTOR CONTROL CENTER
742 SITE LIGHTS

FROM LOCATION 334			CABLE		DEVICE			TO LOCATION 742		
INT LOC	TERM BD	TERM	PIN	COND	WIRE #	DEVICE	DESC	INT LOC	TERM BD	TERM
MCC1	AC_BKR	10A	0 1	01 BLK	L1	480VAC SUPPLY	L1			
MCC1	AC_BKR	10B	0 2	02 BLK	L2	480VAC SUPPLY	L2			
MCC1	AC_BKR	10C	0 3	03 BLK	L3	480VAC SUPPLY	L3			

NOTES FOR CABLE C403

NUMBER NOTES

1 CONNECTIONS TO CUSTOMER EQUIPMENT ARE TO BE DETERMINED AT SITE.

CABLE: C404 CONNECTS: 334 PEECC MOTOR CONTROL CENTER
938 CEMS SYSTEM

FROM LOCATION 334			CABLE		DEVICE			TO LOCATION 938		
INT LOC	TERM BD	TERM	PIN	COND	WIRE #	DEVICE	DESC	INT LOC	TERM BD	TERM
MCC1	AC_BKR	11A	0 1	01 BLK	L1	480VAC SUPPLY	L1			
MCC1	AC_BKR	11B	0 2	02 BLK	L2	480VAC SUPPLY	L2			
MCC1	AC_BKR	11C	0 3	03 BLK	L3	480VAC SUPPLY	L3			

NOTES FOR CABLE C404

NUMBER NOTES

1 CONNECTIONS TO CUSTOMER EQUIPMENT ARE TO BE DETERMINED AT SITE.

CABLE: C406 CONNECTS: 182 MAIN TRANSFOMER (STEP UP)
334 PEECC MOTOR CONTROL CENTER

FROM LOCATION 182			CABLE		DEVICE			TO LOCATION 334		
INT LOC	TERM BD	TERM	PIN	COND	WIRE #	DEVICE	DESC	INT LOC	TERM BD	TERM
			0 1	01 BLK	L1	480VAC SUPPLY	L1	MCC2	AC_BKR	19A
			0 2	02 BLK	L2	480VAC SUPPLY	L2	MCC2	AC_BKR	19B
			0 3	03 BLK	L3	480VAC SUPPLY	L3	MCC2	AC_BKR	19C

NOTES FOR CABLE C406

NUMBER NOTES

1 CONNECTIONS TO CUSTOMER EQUIPMENT ARE TO BE DETERMINED AT SITE.

CABLE: C407 CONNECTS: 182 MAIN TRANSFOMER (STEP UP)
334 PEECC MOTOR CONTROL CENTER

FROM LOCATION 182			CABLE		DEVICE			TO LOCATION 334		
INT LOC	TERM BD	TERM	PIN	COND	WIRE #	DEVICE	DESC	INT LOC	TERM BD	TERM
			0 1	01 BLK	L1	480VAC SUPPLY	L1	MCC1	AC_BKR	07A
			0 2	02 BLK	L2	480VAC SUPPLY	L2	MCC1	AC_BKR	07B
			0 3	03 BLK	L3	480VAC SUPPLY	L3	MCC1	AC_BKR	07C

NOTES FOR CABLE C407

NUMBER NOTES

1 CONNECTIONS TO CUSTOMER EQUIPMENT ARE TO BE DETERMINED AT SITE.

CABLE: C408 CONNECTS: 001 WELDING RECEPTACLE ONE
334 PEECC MOTOR CONTROL CENTER

FROM LOCATION 001			CABLE		DEVICE			TO LOCATION 334		
INT LOC	TERM BD	TERM	PIN	COND	WIRE #	DEVICE	DESC	INT LOC	TERM BD	TERM
	SCR-1	1L1A	0 1	01 BLK	6516	480VAC SUPPLY	L1	MCC2	AC_BKR	16A
	SCR-2	1L2A	0 2	02 BLK	6517	480VAC SUPPLY	L2	MCC2	AC_BKR	16B
	SCR-3	1L3A	0 3	03 BLK	6518	480VAC SUPPLY	L3	MCC2	AC_BKR	16C

NOTES FOR CABLE C408

NUMBER NOTES

1 CONNECTIONS TO CUSTOMER EQUIPMENT ARE TO BE DETERMINED AT SITE.

CABLE: C409A CONNECTS: 182 MAIN TRANSFORMER (STEP UP)
334 PEECC MOTOR CONTROL CENTER

FROM LOCATION 182			CABLE		DEVICE			TO LOCATION 334		
INT LOC	TERM BD	TERM	PIN	COND	WIRE #	DEVICE	DESC	INT LOC	TERM BD	TERM
			0 1	01 BLK	910	125VDC SUPPLY	POS	DC MCC	DC_PNLBD	05A
			0 2	01 BLK	911	125VDC SUPPLY	NEG	DC MCC	DC_PNLBD	05B

NOTES FOR CABLE C409A

NUMBER NOTES

1 CONNECTIONS TO CUSTOMER EQUIPMENT ARE TO BE DETERMINED AT SITE.

2 THIS CURCUIT FOR UNIT 1 & 3 ONLY.

CABLE: C409B CONNECTS: 182 MAIN TRANSFORMER (STEP UP)
334 PEECC MOTOR CONTROL CENTER

FROM LOCATION 182			CABLE		DEVICE			TO LOCATION 334		
INT LOC	TERM BD	TERM	PIN	COND	WIRE #	DEVICE	DESC	INT LOC	TERM BD	TERM
			0 1	01 BLK	910	125VDC SUPPLY	POS	DC MCC	DC_PNLBD	05A
			0 2	02 BLK	911	125 VDC SUPPLY	NEG	DC MCC	DC_PNLBD	05B

NOTES FOR CABLE C409B

NUMBER NOTES

1 CONNECTIONS TO CUSTOMER EQUIPMENT ARE TO BE DETERMINED AT SITE.

2 THIS CIRUIT FOR UNIT 2 & 4 ONLY.

CABLE: C410A CONNECTS: 254 CUSTOMER DEVICES--PANELS
334 PEECC MOTOR CONTROL CENTER

FROM LOCATION 254			CABLE		DEVICE			TO LOCATION 334		
INT LOC	TERM BD	TERM	PIN	COND	WIRE #	DEVICE	DESC	INT LOC	TERM BD	TERM
			0 1	01 BLK	916	125VDV SUPPLY	POS	DC MCC	DC_PNLBD	9A
			0 2	02 BLK	917	125VDC SUPPLY	NEG	DC MCC	DC_PNLBD	9B

NOTES FOR CABLE C410A

NUMBER NOTES

1 CONNECTIONS TO CUSTOMER EQUIPMENT ARE TO BE DETERMINED AT SITE.

2 THIS CIRUIT FOR UNIT 1 & 3 ONLY.

CABLE: C410B CONNECTS: 254 CUSTOMER DEVICES--PANELS
334 PEECC MOTOR CONTROL CENTER

FROM LOCATION 254			CABLE		DEVICE			TO LOCATION 334		
INT LOC	TERM BD	TERM	PIN	COND	WIRE #	DEVICE	DESC	INT LOC	TERM BD	TERM
			0 1	01 BLK	916	125VDV SUPPLY	POS	DC MCC	DC_PNLBD	9A
			0 2	02 BLK	917	125VDC SUPPLY	NEG	DC MCC	DC_PNLBD	9B

NOTES FOR CABLE C410B

NUMBER NOTES

1 CONNECTIONS TO CUSTOMER EQUIPMENT ARE TO BE DETERMINED AT SITE.

2 THIS CIRUIT FOR UNIT 2 & 4 ONLY.

CABLE: C411 CONNECTS: 183 AUXILIARY POWER TRANSFORMER
622 FUEL GAS HEATER CONTROL PANEL

FROM LOCATION 183			CABLE		DEVICE			TO LOCATION 622		
INT LOC	TERM BD	TERM	PIN	COND	WIRE #	DEVICE	DESC	INT LOC	TERM BD	TERM
	AC_BKR_F3	L1	0 1	01 BLK	L1	3PH-SUPPLY	T1		SCR-1	T1
	AC_BKR_F3	L2	0 2	02 BLK	L2	3PH-SUPPLY	T2		SCR-1	T2
	AC_BKR_F3	L3	0 3	03 BLK	L3	3PH-SUPPLY	T3		SCR-1	T3

CABLE: C413 CONNECTS: 622 FUEL GAS HEATER CONTROL PANEL
753 JB309 FUEL GAS HEATING SKID LEVEL 3

FROM LOCATION 622			CABLE		DEVICE			TO LOCATION 753		
INT LOC	TERM BD	TERM	PIN	COND	WIRE #	DEVICE	DESC	INT LOC	TERM BD	TERM
	TB-3	001	0 1	01 YEL	4082	FT-GI-1C	YEL		TBJ2	001
	TB-3	002	0 2	01 RED	4083	FT-GI-1C	RED		TBJ2	002
	TB-3	004	0 3	2 YEL	4084	FT-GI-1D	YEL		TBJ2	004
	TB-3	005	0 4	2 RED	4085	FT-GI-1D	RED		TBJ2	005
	TB-3	007	0 5	3 YEL	4086	26HF-5	YEL		TBJ2	007
	TB-3	008	0 6	3 RED	4087	26HF-5	RED		TBJ2	008

CABLE:C414 CONNECTS: 622 FUEL GAS HEATER CONTROL PANEL
753 JB309 FUEL GAS HEATING SKID LEVEL 3

FROM LOCATION 622			CABLE		DEVICE			TO LOCATION 753		
INT LOC	TERM BD	TERM	PIN	COND	WIRE #	DEVICE	DESC	INT LOC	TERM BD	TERM
	TB2	0 0 8	0 1	01 BLK	4080	ESD	COM NO		TBJ1	0 0 2
	TB2	0 0 9	0 2	02 BLK	4081	ESD			TBJ1	0 0 3
			0 3	03 BLK	SP					

CABLE:C414A CONNECTS: 622 FUEL GAS HEATER CONTROL PANEL
753 JB309 FUEL GAS HEATING SKID LEVEL 3

FROM LOCATION 622			CABLE		DEVICE			TO LOCATION 753		
INT LOC	TERM BD	TERM	PIN	COND	WIRE #	DEVICE	DESC	INT LOC	TERM BD	TERM
<CD>	DTBB	092	01	01 BLK	107	52FH-1	C		TB2	011
<CD>	DTBB	091	02	02 BLK	4075	52FH-1	NO		TB2	010
<QD2>	DTBB	079	03	03 BLK	4078	30FH-1	NO		TB2	013
<QD2>	DTBB	080	04	4 BLK	107	30FH-1	COM		TB2	TBD
<QD1>	DTBD	103	05	5 BLK	4076	4FH	NO		TB2	007
<QD1>	DTBD	104	06	6 BLK	4077	4FH	NO		TB2	008
			07	7 BLK						

NOTES FOR CABLE C414A

NUMBER NOTES

1 ADD THE FOLLOWING JUMPERS IN (622) FUEL GAS HEATER CONTROL PANEL:
TB2-(011) TO TB2-(014) TB2-(014) TO TB2-(017)

2 CONDUCTOR 01 (107) IS THE COMMON FOR THE SIGNALS ON CONDUCTORS 2 THRU 4.

CABLE: C415 CONNECTS: 183 AUXILIARY POWER TRANSFORMER
338 CUSTOMER 480V SUPPLY

FROM LOCATION 183			CABLE		DEVICE			TO LOCATION 338		
INT LOC	TERM BD	TERM	PIN	COND	WIRE #	DEVICE	DESC	INT LOC	TERM BD	TERM
	52AS	L1	0 1	0 1 BLK	L1	3PH-SUPPLY	T1		3 TB	0 0 3
	52AS	L2	0 2	0 2 BLK	L2	3PH-SUPPLY	T2		3 TB	0 0 1
	52AS	L3	0 3	0 3 BLK	L3	3PH-SUPPLY	T3			

NOTES FOR CABLE C415

NUMBER NOTES

1 CONNECTIONS TO CUSTOMER EQUIPMENT ARE TO BE DETERMINED AT SITE.

CABLE: C417A CONNECTS: 102 GENERATOR CONTROL PANEL
102 GENERATOR CONTROL PANEL

FROM LOCATION 102			CABLE		DEVICE			TO LOCATION 102		
INT LOC	TERM BD	TERM	PIN	COND	WIRE #	DEVICE	DESC	INT LOC	TERM BD	TERM
UNIT 2/4	TBNN	004	01	01 BLK	4067	CTS	COM	UNIT 1/3	TBNN	004
UNIT 2/4	TBNN	001	02	02 BLK	4068	CTS	C1	UNIT 1/3	TBNN	001
UNIT 2/4	TBNN	002	03	03 BLK	4068	CT10	C1	UNIT 1/3	TBNN	002
UNIT 2/4	TBNN	003	04	4 BLK	4070	CT11	C1	UNIT 1/3	TBNN	003
UNIT 2/4	TBQQ	004	05	5 BLK	4071	CTS	COM	UNIT 1/3	TBQQ	004
UNIT 2/4	TBQQ	001	06	6 BLK	4072	CT30	C1	UNIT 1/3	TBQQ	001
UNIT 2/4	TBQQ	002	07	7 BLK	4073	CT31	C1	UNIT 1/3	TBQQ	002
UNIT 2/4	TBQQ	003	08	8 BLK	4074	CT32	C1	UNIT 1/3	TBQQ	003
			09	9 BLK	SP					
			10	10 BLK	SP					
			11	11 BLK	SP					
			12	12 BLK	SP					

NOTES FOR CABLE C417A

NUMBER NOTES

1 CABLE FROM EVEN UNITS TO ODD UNITS

CABLE: C418A CONNECTS: 102 GENERATOR CONTROL PANEL
102 GENERATOR CONTROL PANEL

FROM LOCATION 102			CABLE		DEVICE			TO LOCATION 102		
INT LOC	TERM BD	TERM	PIN	COND	WIRE #	DEVICE	DESC	UNIT 2/4	TERM BD	TERM
UNIT 1/3	TBNN	012	1	0 1 BLK	4059	CTS	COM	UNIT 2/4	TBNN	0 1 2
UNIT 1/3	TBNN	009	2	0 2 BLK	4060	CT48	C1	UNIT 2/4	TBNN	0 9 0
UNIT 1/3	TBNN	010	3	0 3 BLK	4061	CT49	C1	UNIT 2/4	TBNN	0 1 0
UNIT 1/3	TBNN	011	4	0 4 BLK	4062	CT50	C1	UNIT 2/4	TBNN	0 1 1
UNIT 1/3	TBQQ	009	5	0 5 BLK	4063	CTS	COM	UNIT 2/4	TBQQ	0 0 4
UNIT 1/3	TBQQ	010	6	0 6 BLK	4064	CT27	C1	UNIT 2/4	TBQQ	0 0 1
UNIT 1/3	TBQQ	011	7	0 7 BLK	4065	CT28	C1	UNIT 2/4	TBQQ	0 0 2
UNIT 1/3	TBQQ	012	8	0 8 BLK	4066	CT29	C1	UNIT 2/4	TBQQ	0 0 3
			9	0 9 BLK	SP					
			10	1 0 BLK	SP					
			11	1 1 BLK	SP					
			12	1 2 BLK	SP					

NOTES FOR CABLE C418A

NUMBER NOTES

1 CABLE FROM ODD UNITS TO EVEN UNITS

CABLE: C420A CONNECTS: 102 GENERATOR CONTROL PANEL
254 CUSTOMER DEVICES--PANELS

FROM LOCATION 102			CABLE		DEVICE			TO LOCATION 254		
INT LOC	TERM BD	TERM	PIN	COND	WIRE #	DEVICE	DESC	INT LOC	TERM BD	TERM
UNIT 2/4	TBEE	0 0 1	0 1	0 1 BLK	1100	CT39	C1			
UNIT 2/4	TBEE	0 0 2	0 2	0 2 BLK	1101	CT40	C1			
UNIT 2/4	TBEE	0 0 3	0 3	0 3 BLK	1102	CT41	C1			
			0 4	0 4 BLK						

NOTES FOR CABLE C420A

NUMBER NOTES

1 CONNECTIONS TO CUSTOMER EQUIPMENT ARE TO BE DETERMINED AT SITE.

CABLE: C420B CONNECTS: 102 GENERATOR CONTROL PANEL
254 CUSTOMER DEVICES--PANELS

FROM LOCATION 102			CABLE		DEVICE			TO LOCATION 254		
INT LOC	TERM BD	TERM	PIN	COND	WIRE #	DEVICE	DESC	INT LOC	TERM BD	TERM
UNIT 2/4	TBEE	0 0 1	0 1	0 1 BLK	1100	CT42	C1			
UNIT 2/4	TBEE	0 0 2	0 2	0 2 BLK	1101	CT43	C1			
UNIT 2/4	TBEE	0 0 3	0 3	0 3 BLK	1102	CT44	C1			
			0 4	0 4 BLK						

NOTES FOR CABLE C420B

NUMBER NOTES

1 CONNECTIONS TO CUSTOMER EQUIPMENT ARE TO BE DETERMINED AT SITE.

CABLE: C421 CONNECTS: 108 AUXILIARY RELAY PANEL
108 AUXILIARY RELAY PANEL

FROM LOCATION 108			CABLE		DEVICE			TO LOCATION 108		
INT LOC	TERM BD	TERM	PIN	COND	WIRE #	DEVICE	DESC	INT LOC	TERM BD	TERM
UNIT 1/3	TBD	003	01	01 BLK	876A	EX-TRIP		UNIT 2/4	TBD	003
UNIT 1/3	TBD	004	02	02 BLK	876	EX-TRIP		UNIT 2/4	TBD	004
UNIT 1/3	TBA	003	03	03 BLK	1148A	52G_PER		UNIT 2/4	TBA	003
UNIT 1/3	TBA	004	04	04 BLK	1148	52G_PER		UNIT 2/4	TBA	004
UNIT 1/3	TBB	007	05	05 BLK	1157	52G_TC1		UNIT 2/4	TBB	007
UNIT 1/3	TBB	008	06	06 BLK	1157A	52G_TC1		UNIT 2/4	TBB	008
UNIT 1/3	TBB	009	07	07 BLK	1157	52G_TC1		UNIT 2/4	TBB	009
UNIT 1/3	TBB	010	08	08 BLK	1157A	52G_TC1		UNIT 2/4	TBB	010
UNIT 1/3	TBB	011	09	09 BLK	1157	52G_TC1		UNIT 2/4	TBB	011
UNIT 1/3	TBB	012	10	10 BLK	1157A	52G_TC1		UNIT 2/4	TBB	012
			11	11 BLK	SP					
			12	12 BLK	SP					

CABLE: C421A CONNECTS: 108 AUXILIARY RELAY PANEL
108 AUXILIARY RELAY PANEL

FROM LOCATION 108			CABLE		DEVICE			TO LOCATION 108		
INT LOC	TERM BD	TERM	PIN	COND	WIRE #	DEVICE	DESC	INT LOC	TERM BD	TERM
UNIT 2/4	TBD	001	01	01 BLK	876A	EX-TRIP		UNIT 1/3	TBD	001
UNIT 2/4	TBD	002	02	02 BLK	876	EX-TRIP		UNIT 1/3	TBD	002
UNIT 2/4	TBA	001	03	03 BLK	1148A	52G_PER		UNIT 1/3	TBA	001
UNIT 2/4	TBA	002	04	04 BLK	1148	52G_PER		UNIT 1/3	TBA	002
UNIT 2/4	TBA	005	05	05 BLK	1157	52G_TC1		UNIT 1/3	TBA	005
UNIT 2/4	TBA	006	06	06 BLK	1156A	52G_TC1		UNIT 1/3	TBA	006
UNIT 2/4	TBA	007	07	07 BLK	1157	52G_TC1		UNIT 1/3	TBA	007
UNIT 2/4	TBA	008	08	08 BLK	1156A	52G_TC1		UNIT 1/3	TBA	008
UNIT 2/4	TBA	009	09	09 BLK	1157	52G_TC1		UNIT 1/3	TBA	009
UNIT 2/4	TBA	010	10	10 BLK	1156A	52G_TC1		UNIT 1/3	TBA	010
			11	11 BLK	SP					
			12	12 BLK	SP					

CABLE: C421B CONNECTS: 108 AUXILIARY RELAY PANEL
108 AUXILIARY RELAY PANEL

FROM LOCATION 108			CABLE		DEVICE			TO LOCATION 108		
INT LOC	TERM BD	TERM	PIN	COND	WIRE #	DEVICE	DESC	INT LOC	TERM BD	TERM
UNIT 2/4	TBC	001	01	01 BLK	2798	52G_TC2		UNIT 1/3	TBC	001
UNIT 2/4	TBC	002	02	02 BLK	2799	52G_TC2		UNIT 1/3	TBC	002
UNIT 2/4	TBC	003	03	03 BLK	2798	52G_TC2		UNIT 1/3	TBC	003
UNIT 2/4	TBC	004	04	04 BLK	2799	52G_TC2		UNIT 1/3	TBC	004
UNIT 2/4	TBA	011	05	05 BLK	2798	52G_TC2		UNIT 1/3	TBA	011
UNIT 2/4	TBA	012	06	06 BLK	2799	52G_TC2		UNIT 1/3	TBA	012
UNIT 2/4	TBC	005	07	07 BLK	1803	BKR_FAILURE		UNIT 1/3	TBC	005
UNIT 2/4	TBC	006	08	08 BLK	1803A	BKR_FAILURE		UNIT 1/3	TBC	006
UNIT 2/4	TBG	005	09	09 BLK	1803	BKR_FAILURE		UNIT 1/3	TBG	005
UNIT 2/4	TBG	006	10	10 BLK	1803A	BKR_FAILURE		UNIT 1/3	TBG	006
			11	11 BLK	SP					
			12	12 BLK	SP					

CABLE: C421C CONNECTS: 108 AUXILIARY RELAY PANEL
108 AUXILIARY RELAY PANEL

FROM LOCATION 108			CABLE		DEVICE			TO LOCATION 108		
INT LOC	TERM BD	TERM	PIN	COND	WIRE #	DEVICE	DESC	INT LOC	TERM BD	TERM
UNIT 1/3	TBB	001	01	01 BLK	2798	52G_TC2		UNIT 2/4	TBB	012
UNIT 1/3	TBB	002	02	02 BLK	2799	52G_TC2		UNIT 2/4	TBB	012
UNIT 1/3	TBB	003	03	03 BLK	2798	52G_TC2		UNIT 2/4	TBB	001
UNIT 1/3	TBB	004	04	04 BLK	2799	52G_TC2		UNIT 2/4	TBB	002
UNIT 1/3	TBD	009	05	05 BLK	2798	52G_TC2		UNIT 2/4	TBD	003
UNIT 1/3	TBD	010	06	06 BLK	2799	52G_TC2		UNIT 2/4	TBD	004
UNIT 1/3	TBD	011	07	07 BLK	1803	BKR_FAILURE		UNIT 2/4	TBD	011
UNIT 1/3	TBD	012	08	08 BLK	1803A	BKR_FAILURE		UNIT 2/4	TBD	012
UNIT 1/3	TBB	005	09	09 BLK	1803	BKR_FAILURE		UNIT 2/4	TBB	005
UNIT 1/3	TBB	006	10	10 BLK	1803A	BKR_FAILURE		UNIT 2/4	TBB	006
			11	11 BLK	SP					
			12	12 BLK	SP					

CABLE: C422 CONNECTS: 108 AUXILIARY RELAY PANEL
108 AUXILIARY RELAY PANEL

FROM LOCATION 108			CABLE		DEVICE			TO LOCATION 108		
INT LOC	TERM BD	TERM	PIN	COND	WIRE #	DEVICE	DESC	INT LOC	TERM BD	TERM
UNIT 2/4	TBD	007	01	01 BLK	107	86T1/86AT	COM	UNIT 1/3	TBD	007
UNIT 2/4	TBD	008	02	02 BLK	4715	86T1/86AT	NC	UNIT 1/3	TBD	008
			03	03 BLK	SP					
			04	04 BLK	SP					
			05	05 BLK	SP					
			06	06 BLK	SP					

CABLE: C422A CONNECTS: 108 AUXILIARY RELAY PANEL
108 AUXILIARY RELAY PANEL

FROM LOCATION 108			CABLE		DEVICE			TO LOCATION 108		
INT LOC	TERM BD	TERM	PIN	COND	WIRE #	DEVICE	DESC	INT LOC	TERM BD	TERM
	TBD	005	01	01 BLK	107	86T2/86AT	COM		TBD	005
	TBD	006	02	02 BLK	4715	86T2/86AT	NC		TBD	006
			03	03 BLK	SP					
			04	04 BLK	SP					
			05	05 BLK	SP					
			06	06 BLK	SP					

CABLE: C426 CONNECTS: 108 AUXILIARY RELAY PANEL
254 CUSTOMER DEVICES--PANELS

FROM LOCATION 108			CABLE		DEVICE			TO LOCATION 254		
INT LOC	TERM BD	TERM	PIN	COND	WIRE #	DEVICE	DESC	INT LOC	TERM BD	TERM
	TBAA	003		01 SHD	E2766	96GR-1	SHD			
	TBAA	001	01	01 ORN	2766	96GR-1	SIG +			
	TBAA	002	02	01 BLK	2767	96GR-1	SIG -			
	TBBB	004		2 SHD	E2764	96AW-1	SHD			
	TBBB	005	03	2 ORN	2764	96AW-1	SIG +			
	TBBB	006	04	2 BLK	2765	96AW-1	SIG -			
				3 SHD						
			05	3 ORN	SP					
			06	3 BLK	SP					
	TBAA	003		4 SHD	SE2768	96GV-1	SHD			
	TBAA	004	07	4 ORN	2768	96GV-1	SIG +			
	TBAA	005	08	4 BLK	2769	96GV-1	SIG -			
	TBAA	008		5 SHD	E2770	96GV-2	SHD			
	TBAA	006	09	5 ORN	2770	96GV-2	SIG +			
	TBAA	007	10	5 BLK	2771	96GV-2	SIG -			
	TBAA	008		6 SHD	E2758	96GV-3	SHD			
	TBAA	009	11	6 ORN	2758	96GV-3	SIG +			
	TBAA	010	12	6 BLK	2759	96GV-3	SIG -			

NOTES FOR CABLE C426

NUMBER	NOTES
1	CONNECTIONS TO CUSTOMER EQUIPMENT ARE TO BE DETERMINED AT SITE.

CABLE: C426A CONNECTS: 108 AUXILIARY RELAY PANEL
254 CUSTOMER DEVICES-PANELS

FROM LOCATION 108			CABLE		DEVICE			TO LOCATION 254		
INT LOC	TERM BD	TERM	PIN	COND	WIRE #	DEVICE	DESC	INT LOC	TERM BD	TERM
	TBBB	004		01 SHD	E2727	96GG-2	SHD			
	TBBB	003	01	01 ORN	2728	96GG-2	RD			
	TBBB	001	02	01 BLK	2727	96GG-2	BK			
	TBBB	002	03	01 RED	2729	96GG-2	WH			

NOTES FOR CABLE C426A

NUMBER NOTES

1 CONNECTIONS TO CUSTOMER EQUIPMENT ARE TO BE DETERMINED AT SITE.

CABLE: C428 CONNECTS: 101 TURBINE CONTROL PANEL
146 METALCLAD SWITCHGEAR

FROM LOCATION 101			CABLE		DEVICE			TO LOCATION 146		
INT LOC	TERM BD	TERM	PIN	COND	WIRE #	DEVICE	DESC	INT LOC	TERM BD	TERM
<QD1>	DTBB	046	01	01 BLK	107	P125VDC	C		TBC82	0 0 1
<QD1>	DTBB	047	02	02 BLK	7625	37GJ-1	NO		TBC82	0 0 4
<QD1>	DTBB	049	03	3 BLK	7625	37JG-2	NO		TBC82	0 0 5
			04	4 BLK	SP					
			05	5 BLK	SP					
			06	6 BLK	SP					

NOTES FOR CABLE C428

NUMBER NOTES

1 CONDUCTOR 01 (107) IS THE COMMON FOR THE SIGNALS ON CONDUCTORS 02 AND O3.

CABLE: C473 CONNECTS: 101 TURBINE CONTROL PANEL
387 JB020G TURBINE COMPARTMENT LOW LEVEL

FROM LOCATION 101			CABLE		DEVICE			TO LOCATION 387		
INT LOC	TERM BD	TERM	PIN	COND	WIRE #	DEVICE	DESC	INT LOC	TERM BD	TERM
<R>	SHD	COM		01 SHD	E3234	39V-3A	SHD		TBD	0 1 7
<R>	TBQB	057	01	01 ORN	3234	39V-3A	WHT		TBD	0 1 5
<R>	TBQB	058	02	01 BLK	3235	39V-3A	BLK		TBD	0 1 6

CABLE: C474 CONNECTS: 101 TURBINE CONTROL PANEL
387 JB020G TURBINE COMPARTMENT LOW LEVEL

FROM LOCATION 101			CABLE		DEVICE			TO LOCATION 387		
INT LOC	TERM BD	TERM	PIN	COND	WIRE #	DEVICE	DESC	INT LOC	TERM BD	TERM
<R>	SHD	COM		01 SHD	E5324	39V-3B	SHD		TBB	0 1 7
<R>	TBQB	059	01	01 ORN	5324	39V-3B	WHT		TBB	0 1 5
<R>	TBQB	060	02	01 BLK	5325	39V-3B	W/B		TBB	0 1 6

CABLE: C480 CONNECTS: 334 PEECC MOTOR CONTROL CENTER
514 CUSTOMER SWITCHGEAR

FROM LOCATION 334			CABLE		DEVICE			TO LOCATION 514		
INT LOC	TERM BD	TERM	PIN	COND	WIRE #	DEVICE	DESC	INT LOC	TERM BD	TERM
PNL_BD	AC_BKR	19L	01	01 BLK	2519	120 VAC	L		TBB	0 1 7
PNL_BD	AC_BKR	19N	02	02 BLK	2503-19	120 VAC	N		TBB	0 1 5
			03	03 BLK	SP				TBB	0 1 6

NOTES FOR CABLE C480

NUMBER	NOTES
1	CONNECTIONS TO CUSTOMER EQUIPMENT ARE TO BE DETERMINED AT SITE.
2	ADD A 3 TO 4 INCH WHITE SLEEVE, PER NEC CODE, TO INDICATE AC NEUTRAL ON CONDUCTOR 02.

CABLE: C481 CONNECTS: 334 PEECC MOTOR CONTROL CENTER
514 CUSTOMER SWITCHGEAR

FROM LOCATION 334			CABLE		DEVICE			TO LOCATION 514		
INT LOC	TERM BD	TERM	PIN	COND	WIRE #	DEVICE	DESC	INT LOC	TERM BD	TERM
MCCDC	DC_BKR	10A	01	01 BLK	916A	125VDC	POS			
MCCDC	DC_BKR	10B	02	02 BLK	917A	125VDC	NEG			

CABLE: C512 CONNECTS: 101 TURBINE CONTROL PANEL
449 JB078 TURBINE AIR INLET FILTER COMPARTMENT

FROM LOCATION 101			CABLE		DEVICE			TO LOCATION 449		
INT LOC	TERM BD	TERM	PIN	COND	WIRE #	DEVICE	DESC	INT LOC	TERM BD	TERM
<QD1>	DTBA	052	01	01 BLK	107	125VDC	C		TBA	011
<QD1>	DTBA	053	02	02 BLK	1699	63TF-2A	NC		TBA	001
<QD1>	DTBA	015	03	03 BLK	176	63TF-2B	NC		TBA	004
<QD1>	DTBA	051	04	04 BLK	1667	63TF-1	NC		TBA	010
<CD>	DTBA	065	05	05 BLK	681	63CA-1/27TF-1	NO		TBA	018
<CD>	DTBA	066	06	06 BLK	107	63CA-1/27TF-1	C		TBA	014
			07	07 BLK	SP					

NOTES FOR CABLE C512

NUMBER	NOTES
1	CONDUCTOR 01 (107) IS THE COMMON FOR THE SIGNALS ON CONDUCTORS 02 THRU 04.
2	ADD THE FOLLOWING JUMPERS IN (449) JB078 TURB, AIR INLET FILTER COMPARTMENT: TBA-(011) TO TBA-(005) TBA-(005) TO TBA-(002) TBA-(011) TO TBA-(014)

CABLE: C513A CONNECTS: 101 TURBINE CONTROL PANEL
157 TURBINE AIR INLET FILTER COMPARTMENT

FROM LOCATION 101			CABLE		DEVICE			TO LOCATION 157		
INT LOC	TERM BD	TERM	PIN	COND	WIRE #	DEVICE	DESC	INT LOC	TERM BD	TERM
<R>	SHD	COM		01 SHD	E8497	AT-ID-1	SHD			
<R>	TBQA	0 2 3	01	01 YEL	8497	AT-ID-1	YEL		AT-ID-1	YEL
<R>	TBQA	0 2 4	02	01 RED	8498	AT-ID-1	RED		AT-ID-1	RED

CABLE: C513B CONNECTS: 101 TURBINE CONTROL PANEL
157 TURBINE AIR INLET FILTER COMPARTMENT

FROM LOCATION 101			CABLE		DEVICE			TO LOCATION 157		
INT LOC	TERM BD	TERM	PIN	COND	WIRE #	DEVICE	DESC	INT LOC	TERM BD	TERM
<R>	SHD	COM		01 SHD	E8499	AT-ID-2	SHD			
<R>	TBQA	0 5 3	01	01 YEL	8499	AT-ID-2	YEL		AT-ID-2	YEL
<R>	TBQA	0 5 4	02	01 RED	9400	AT-ID-2	RED		AT-ID-2	RED

CABLE: C513C CONNECTS: 101 TURBINE CONTROL PANEL
157 TURBINE AIR INLET FILTER COMPARTMENT

FROM LOCATION 101			CABLE		DEVICE			TO LOCATION 157		
INT LOC	TERM BD	TERM	PIN	COND	WIRE #	DEVICE	DESC	INT LOC	TERM BD	TERM
<R>	SHD	COM		01 SHD	E9401	AT-ID-3	SHD			
<R>	TBQA	0 8 3	01	01 YEL	9401	AT-ID-3	YEL		AT-ID-3	YEL
<R>	TBQA	0 8 4	02	01 RED	9402	AT-ID-3	RED		AT-ID-3	RED

CABLE: C515 CONNECTS: 339 JB298 PEECC LEVEL 3
449 JB078 TURB. AIR INLET FILTER COMPARTMENT

FROM LOCATION 339			CABLE		DEVICE			TO LOCATION 449		
INT LOC	TERM BD	TERM	PIN	COND	WIRE #	DEVICE	DESC	INT LOC	TERM BD	TERM
	AC_BKR	21L	0 1	0 1 BLK	2421	120VAC SUPPLY	L		TBB	0 0 1
	AC_BKR	23L	0 2	0 2 BLK	2523	120VAC SUPPLY	L		TBB	0 0 2
	AC_BKR	23N	0 3	0 3 BLK	2503-21	120VAC SUPPLY	N		TBB	0 0 3

NOTES FOR CABLE C515

NUMBER	NOTES
1	ADD A 3 TO 4 INCH WHITE SLEEVE, PER NEC CODE, TO INDICATE AC NEUTRAL ON CONDUCTOR 03.

CABLE: C516A CONNECTS: 101 TURBINE CONTROL PANEL
447 INLET HEATING CONTROL VALVE

FROM LOCATION 101			CABLE		DEVICE			TO LOCATION 447		
INT LOC	TERM BD	TERM	PIN	COND	WIRE #	DEVICE	DESC	INT LOC	TERM BD	TERM
<QD1>	DTBD	0 2 2	0 1	0 1 BLK	265	20TH-1	0 1		20TH-1	0 1
<QD1>	DTBD	0 2 3	0 2	0 2 BLK	108	20TH-1	0 2		20TH-1	0 2

CABLE: C516E CONNECTS: 101 TURBINE CONTROL PANEL
611 INLET HEATING ISOLATION VALVE

FROM LOCATION 101			CABLE		DEVICE			TO LOCATION 611		
INT LOC	TERM BD	TERM	PIN	COND	WIRE #	DEVICE	DESC	INT LOC	TERM BD	TERM
<QD1>	DTBA	0 9 0	01	0 1 BLK	107	33TH-3	C		33TH-3	C
<QD1>	DTBA	0 8 9	02	0 2 BLK	9873	33TH-3	NO		33TH-3	NO

CABLE: C517A CONNECTS: 101 TURBINE CONTROL PANEL
447 INLET HEATING CONTROL VALVE

FROM LOCATION 101			CABLE		DEVICE			TO LOCATION 447		
INT LOC	TERM BD	TERM	PIN	COND	WIRE #	DEVICE	DESC	INT LOC	TERM BD	TERM
<R>	SHD	COM		0 1 SHD	E8352	96TH-1	SHD			
<R>	TBQC	0 7 7	0 1	0 1 ORN	8352	96TH-1	SIG+		96TH-1	SIG+
<R>	TBQC	0 7 9	0 2	0 1 BLK	8353	96TH-1	SIG-		96TH-1	SIG-

CABLE: C517B CONNECTS: 101 TURBINE CONTROL PANEL
447 INLET HEATING CONTROL VALVE

FROM LOCATION 101			CABLE		DEVICE			TO LOCATION 447		
INT LOC	TERM BD	TERM	PIN	COND	WIRE #	DEVICE	DESC	INT LOC	TERM BD	TERM
<R>	SHD	COM		0 1 SHD	E9340	65EP-3	SHD			
<R>	TBQC	0 8 3	0 1	0 1 ORN	9340	65EP-3	SIG+		65EP-3	SIG+
<R>	TBQC	0 8 4	0 2	0 1 BLK	9341	65EP-3	SIG-		65EP-3	SIG-

CABLE: C517D CONNECTS: 101 TURBINE CONTROL PANEL
447 INLET HEATING CONTROL VALVE

FROM LOCATION 101			CABLE		DEVICE			TO LOCATION 447		
INT LOC	TERM BD	TERM	PIN	COND	WIRE #	DEVICE	DESC	INT LOC	TERM BD	TERM
<R>	SHD	COM		0 1 SHD	E6998	96BH-1	SHD			
<R>	TBQC	0 7 1	0 1	0 1 ORN	6988	96BH-1	SIG+		96BH-1	SIG +
<R>	TBQC	0 7 2	0 2	0 1 BLK	6989	96BH-1	SIG-		96BH-1	SIG -

CABLE: C517E CONNECTS: 101 TURBINE CONTROL PANEL
447 INLET HEATING CONTROL VALVE

FROM LOCATION 101			CABLE		DEVICE			TO LOCATION 447		
INT LOC	TERM BD	TERM	PIN	COND	WIRE #	DEVICE	DESC	INT LOC	TERM BD	TERM
<R>	SHD	COM		0 1 SHD	E6990	96BH-2	SHD			
<R>	TBQC	0 6 9	0 1	0 1 ORN	6990	96BH-2	SIG+		96BH-2	SIG+
<R>	TBQC	0 7 0	0 2	0 1 BLK	6991	96BH-2	SIG-		96BH-2	SIG-

CABLE: C531 CONNECTS: 101 TURBINE CONTROL PANEL
428 JB090 COOLING WATER MODULE

FROM LOCATION 101			CABLE		DEVICE			TO LOCATION 428		
INT LOC	TERM BD	TERM	PIN	COND	WIRE #	DEVICE	DESC	INT LOC	TERM BD	TERM
<CD>	DTBA	0 7 6	0 1	0 1 BLK	107	P125VDC	COM		TBR	002
<CD>	DTBA	0 7 5	0 2	0 2 BLK	634	7IWL-1	NC		TBR	001
<QD1>	DTBA	0 6 9	0 3	0 3 BLK	1684	63WC-1	NO1		TBR	007
<CD>	DTBA	0 5 1	0 4	0 4 BLK	7606	39FC-1	NC		TBP	001
<CD>	DTBA	0 6 3	0 5	0 5 BLK	7607	39FC-2	NC		TBP	004
<CD>	DTBA	0 7 1	0 6	0 6 BLK	7608	39FC-3	NC		TBP	007

NOTES FOR CABLE C531

NUMBER	NOTES
1	CONDUCTOR 01 (107) IS THE COMMON FOR THE SIGNALS ON CONDUCTOR 2 THRU 6.

CABLE: C532 CONNECTS: 339 JB298 PEECC LEVEL 3
428 JB090 COOLING WATER MODULE

FROM LOCATION 339			CABLE		DEVICE			TO LOCATION 428		
INT LOC	TERM BD	TERM	PIN	COND	WIRE #	DEVICE	DESC	INT LOC	TERM BD	TERM
	TBL	0 0 1	0 1	0 1 BLK	7500	39FC-1	C1		TBN	0 0 2
	TBL	0 0 2	0 2	0 2 BLK	7501	39FC-1	NC1		TBN	0 0 1
	TBL	0 0 3	0 3	0 3 BLK	7507	39FC-2	C1		TBN	0 0 6
	TBL	0 0 4	0 4	0 4 BLK	7508	39FC-2	NC1		TBN	0 0 5
	TBL	0 0 5	0 5	0 5 BLK	7514	39FC-3	C1		TBN	0 1 0
	TBL	0 0 6	0 6	0 6 BLK	7515	39FC-3	NC1		TBN	0 0 9
			0 7	0 7 BLK	SP					
			0 8	0 8 BLK	SP					
			0 9	0 9 BLK	SP					
			1 0	1 0 BLK	SP					
			1 1	1 1 BLK	SP					
			1 2	1 2 BLK	SP					

CABLE: C533 CONNECTS: 334 PEECC MOTOR CONTROL CENTER
438 JB090A COOLING WATER MODULE LEVEL 4

FROM LOCATION 334			CABLE		DEVICE			TO LOCATION 438		
INT LOC	TERM BD	TERM	PIN	COND	WIRE #	DEVICE	DESC	INT LOC	TERM BD	TERM
MCC1	FC1-TB	T1	0 1	0 1 BLK	T1-FC1	88FC-1	T1		TBA	0 0 1
MCC1	FC1-TB	T2	0 2	0 2 BLK	T2-FC1	88FC-1	T2		TBA	0 0 2
MCC1	FC1-TB	T3	0 3	0 3 BLK	T3-FC1	88FC-1	T3		TBA	0 0 3

CABLE: C534 CONNECTS: 334 PEECC MOTOR CONTROL CENTER
438 JB090A COOLING WATER MODULE LEVEL 4

FROM LOCATION 334			CABLE		DEVICE			TO LOCATION 438		
INT LOC	TERM BD	TERM	PIN	COND	WIRE #	DEVICE	DESC	INT LOC	TERM BD	TERM
MCC2	FC2-TB	T1	0 1	0 1 BLK	T1-FC2	88FC-2	T1		TBB	0 0 1
MCC2	FC2-TB	T2	0 2	0 2 BLK	T2-FC2	88FC-2	T2		TBB	0 0 2
MCC2	FC2-TB	T3	0 3	0 3 BLK	T3-FC2	88FC-2	T3		TBB	0 0 3

CABLE: C535 CONNECTS: 334 PEECC MOTOR CONTROL CENTER
438 JB090A COOLING WATER MODULE LEVEL 4

FROM LOCATION 334			CABLE		DEVICE			TO LOCATION 438		
INT LOC	TERM BD	TERM	PIN	COND	WIRE #	DEVICE	DESC	INT LOC	TERM BD	TERM
MCC1	FC3-TB	T1	0 1	0 1 BLK	T1-FC3	88FC-3	T1		TBC	0 0 1
MCC1	FC3-TB	T2	0 2	0 2 BLK	T2-FC3	88FC-3	T2		TBC	0 0 2
MCC1	FC3-TB	T3	0 3	0 3 BLK	T3-FC3	88FC-3	T3		TBC	0 0 3

CABLE: C537 CONNECTS: 334 PEECC MOTOR CONTROL CENTER
438 JB090A COOLING WATER MODULE LEVEL 4

FROM LOCATION 334			CABLE		DEVICE			TO LOCATION 438		
INT LOC	TERM BD	TERM	PIN	COND	WIRE #	DEVICE	DESC	INT LOC	TERM BD	TERM
MCC1	WC1-TB	T1	0 1	0 1 BLK	T1-WC1	88WC-1	T1		TBK	0 0 1
MCC1	WC1-TB	T2	0 2	0 2 BLK	T2-WC1	88WC-1	T2		TBK	0 0 2
MCC1	WC1-TB	T3	0 3	0 3 BLK	T3-WC1	88WC-1	T3		TBK	0 0 3

CABLE: C538 CONNECTS: 334 PEECC MOTOR CONTROL CENTER
438 JB090A COOLING WATER MODULE LEVEL 4

FROM LOCATION 334			CABLE		DEVICE			TO LOCATION 438		
INT LOC	TERM BD	TERM	PIN	COND	WIRE #	DEVICE	DESC	INT LOC	TERM BD	TERM
MCC2	WC2-TB	T1	0 1	0 1 BLK	T1-WC2	88WC-2	T1		TBL	0 0 1
MCC2	WC2-TB	T2	0 2	0 2 BLK	T2-WC2	88WC-2	T2		TBL	0 0 2
MCC2	WC2-TB	T3	0 3	0 3 BLK	T3-WC2	88WC-2	T3		TBL	0 0 3

CABLE: C544 CONNECTS: 339 JB298 PEECC LEVEL 3
428 JB090 COOLING WATER MODULE

FROM LOCATION 339			CABLE		DEVICE			TO LOCATION 428		
INT LOC	TERM BD	TERM	PIN	COND	WIRE #	DEVICE	DESC	INT LOC	TERM BD	TERM
	TBM	0 0 1	0 1	0 1 BLK	7504	23FC-1	H1		TBM	0 0 1
	TBM	0 0 2	0 2	0 2 BLK	7505	23FC-1	H2		TBM	0 0 2
	TBM	0 0 3	0 3	0 3 BLK	7511	23FC-2	H1		TBM	0 0 3
	TBM	0 0 4	0 4	0 4 BLK	7512	23FC-2	H2		TBM	0 0 4
	TBM	0 0 5	0 5	0 5 BLK	7518	23FC-3	H1		TBM	0 0 5
	TBM	0 0 6	0 6	0 6 BLK	7519	23FC-3	H2		TBM	0 0 6
			0 7	0 7 BLK	SP					
			0 8	0 8 BLK	SP					
	TBM	0 0 9	0 9	0 9 BLK	7569	23WC-1	H1		TBM	0 1 3
	TBM	0 1 0	1 0	1 0 BLK	7570	23WC-1	H2		TBM	0 1 4
	TBM	0 1 1	1 1	1 1 BLK	7573	23WC-2	H1		TBM	0 1 6
	TBM	0 1 2	1 2	1 2 BLK	7574	23WC-2	H2		TBM	0 1 7

CABLE: C549 CONNECTS: 102 GENERATOR CONTROL PANLEL
254 CUSTOMER DEVICES--PANELS

FROM LOCATION 102			CABLE		DEVICE			TO LOCATION 254		
INT LOC	TERM BD	TERM	PIN	COND	WIRE #	DEVICE	DESC	INT LOC	TERM BD	TERM
				01 SHD	E1701A	GEN/DMM/D72	SHD			
	TBDD	0 0 1	0 1	01 ORN	1701A	GEN/DMM/D72	Z1			
	TBDD	0 0 2	0 2	01 BLK	1702A	GEN/DMM/D72	K1			
	TBDD	0 0 3	0 3	01 RED	17033A	GEN/DMM/D72	Y1			
				02 SHD	E1701B	GEN/DMM/D72	SHD			
	TBDD	0 0 4	0 4	02 ORN	1701B	GEN/DMM/D72	Z2			
	TBDD	0 0 5	0 5	02 BLK	1702B	GEN/DMM/D72	K2			
	TBDD	0 0 6	0 6	02 RED	1703B	GEN/DMM/D72	Y2			
				03 SHD	E1701C	GEN/DMM/D72	SHD			
	TBDD	0 0 7	0 7	03 ORN	1701C	GEN/DMM/D72	Z3			
	TBDD	0 0 8	0 8	03 BLK	1702C	GEN/DMM/D72	K3			
	TBDD	0 0 9	0 9	03 RED	1703C	GEN/DMM/D72	Y3			
				04 SHD	SP		SHD			
			1 0	04 ORN	SP					
			1 1	04 BLK	SP					
			1 2	04 RED	SP					
				05 SHD			SHD			
			1 3	05 ORN	SP					
			1 4	05 BLK	SP					
			1 5	05 RED	SP					
				06 SHD			SHD			
			1 6	06 ORN	SP					
			1 7	06 BLK	SP					
			1 8	06 RED	SP					

NOTES FOR CABLE C549

NUMBER	NOTES
1	CONNECTIONS TO CUSTOMER EQUIPMENT ARE TO BE DETERMINED AT SITE.

CABLE: C549A CONNECTS: 108 AUXILIARY RELAY PANEL
254 CUSTOMER DEVICES--PANELS

FROM LOCATION 102			CABLE		DEVICE			TO LOCATION 254		
INT LOC	TERM BD	TERM	PIN	COND	WIRE #	DEVICE	DESC	INT LOC	TERM BD	TERM
				0 1 SHD	E1701E	AUX/DMM/D72	SHD			
	TBDD	0 0 1	0 1	0 1 ORN	1701E	AUX/DMM/D72	Z28			
	TBDD	0 0 2	0 2	0 1 BLK	1702E	AUX/DMM/D72	K26			
	TBDD	0 0 3	0 3	0 1 RED	1703E	AUX/DMM/D72	Y27			
				0 2 SHD	E1701F	AUX/DMM/D72	SHD			
	TBDD	0 0 4	0 4	0 2 ORN	1701F	AUX/DMM/D72	Z22			
	TBDD	0 0 5	0 5	0 2 BLK	1702F	AUX/DMM/D72	K20			
	TBDD	0 0 6	0 6	0 2 RED	1703F	AUX/DMM/D72	Y21			
				0 3 SHD	E1701G	AUX/DMM/D72	SHD			
	TBDD	0 1 0	0 7	0 3 ORN	1701G	AUX/DMM/D72	Z25			
	TBDD	0 1 1	0 8	0 3 BLK	1702G	AUX/DMM/D72	K23			
	TBDD	0 1 2	0 9	0 3 RED	1703G	AUX/DMM/D72	Y24			
				0 4 SHD			SHD			
			1 0	0 4 ORN	SP					
			1 1	0 4 BLK	SP					
			1 2	0 4 RED	SP					
				0 5 SHD			SHD			
			1 3	0 5 ORN	SP					
			1 4	0 5 BLK	SP					
			1 5	0 5 RED	SP					
				0 6 SHD			SHD			
			1 6	0 6 ORN	SP					
			1 7	0 6 BLK	SP					
			1 8	0 6 RED	SP					

NOTES FOR CABLE C549A

NUMBER NOTES

1 CONNECTIONS TO CUSTOMER EQUIPMENT ARE TO BE DETERMINED AT SITE.

CABLE: C550A CONNECTS: 101 TURBINE CONTROL PANEL
254 CUSTOMER DEVICES-PANELS

FROM LOCATION 101			CABLE		DEVICE			TO LOCATION 254		
INT LOC	TERM BD	TERM	PIN	COND	WIRE #	DEVICE	DESC	INT LOC	TERM BD	TERM
<QD1>	DTBD	073	0 1	0 1 BLK	4025	8S3_OFF	NO			
<QD1>	DTBD	074	0 2	0 2 BLK	4026	8S3_OFF	C			
<QD1>	DTBD	075	0 3	0 3 BLK	4027	8S3_OFF	NC			
<CD>	DTBD	070	0 4	0 4 BLK	3014	3SQ	NO			
<CD>	DTBD	071	0 5	0 5 BLK	3013	3SQ	C			
<CD>	DTBD	072	0 6	0 6 BLK	3015	3SQ	NC			
<CD>	DTBD	073	0 7	0 7 BLK	3035	52GX-1	NO			
<CD>	DTBD	074	0 8	0 8 BLK	3034	52GX-1	C			
<CD>	DTBD	075	0 9	0 9 BLK	3036	52GX-1	NC			
<CD>	DTBD	076	1 0	1 0 BLK	3008	3RS	NO			
<CD>	DTBD	077	1 1	1 1 BLK	3007	3RS	C			
<CD>	DTBD	078	1 2	1 2 BLK	3009	3RS	NC			
<CD>	DTBD	079	1 3	1 3 BLK	3011	1X	NO			
<CD>	DTBD	080	1 4	1 4 BLK	3010	1X	C			
<CD>	DTBD	081	1 5	1 5 BLK	3012	1X	NC			
<CD>	DTBD	082	1 6	1 6 BLK	3017	28FDX	NO			
<CD>	DTBD	083	1 7	1 7 BLK	3016	28FDX	C			
<CD>	DTBD	084	1 8	1 8 BLK	3018	28FDX	NC			
			1 9	1 9 BLK	SP					

NOTES FOR CABLE C550A

NUMBER	NOTES
1	CONNECTIONS TO CUSTOMER EQUIPMENT ARE TO BE DETERMINED AT SITE.

CABLE: C550B CONNECTS: 101 TURBINE CONTROL PANEL
254 CUSTOMER DEVICES-PANELS

FROM LOCATION 101			CABLE		DEVICE			TO LOCATION 254		
INT LOC	TERM BD	TERM	PIN	COND	WIRE #	DEVICE	DESC	INT LOC	TERM BD	TERM
<CD>	DTBD	085	0 1	0 1 BLK	3020	3-1	NO			
<CD>	DTBD	086	0 2	0 2 BLK	3019	3-1	C			
<CD>	DTBD	087	0 3	0 3 BLK	3021	3-1	NC			
<QD1>	DTBD	091	0 4	0 4 BLK	3041	30X	NO			
<QD1>	DTBD	091	0 5	0 5 BLK	3040	30X	C			
<QD1>	DTBD	093	0 6	0 6 BLK	3042	30X	NC			
<QD1>	DTBD	094	0 7	0 7 BLK	3044	30Y	NO			
<QD1>	DTBD	095	0 8	0 8 BLK	3043	30Y	C			
<QD1>	DTBD	096	0 9	0 9 BLK	3045	30Y	NC			
<QD1>	DTBD	088	1 0	1 0 BLK	3032	26TCZ	NO			
<QD1>	DTBD	089	1 1	1 1 BLK	3031	26TCZ	C			
<QD1>	DTBD	090	1 2	1 2 BLK	3033	26TCZ	NC			
<CD>	DTBD	100	1 3	1 3 BLK	3038	45TFX-1	NO			
<CD>	DTBD	101	1 4	1 4 BLK	3039	45TFX-1	C			
<CD>	DTBD	102	1 5	1 5 BLK	3037	45TFX-1	NC			
<CD>	DTBD	002	1 6	1 6 BLK	4006	94X-1	NO			
<CD>	DTBD	003	1 7	1 7 BLK	4007	94X-1	C			
<CD>	DTBD	004	1 8	1 8 BLK	4008	94X-1	NC			
			1 9	1 9 BLK	SP					

NOTES FOR CABLE C550B

NUMBER	NOTES
1	CONNECTIONS TO CUSTOMER EQUIPMENT ARE TO BE DETERMINED AT SITE.

CABLE: C550C CONNECTS: 101 TURBINE CONTROL PANEL

254 CUSTOMER DEVOICES-PANELS

FROM LOCATION 101			CABLE		DEVICE			TO LOCATION 254		
INT LOC	TERM BD	TERM	PIN	COND	WIRE #	DEVICE	DESC	INT LOC	TERM BD	TERM
<QD1>	DTBD	107	0 1	0 1 BLK	3098	4T1	NO			
<QD1>	DTBD	108	0 2	0 2 BLK	3099	4T1	C			
<QD1>	DTBD	106	0 3	0 3 BLK	3097	4T1	NC			
<CD>	DTBD	014	0 4	0 4 BLK	4000	94X-2	NO			
<CD>	DTBD	015	0 5	0 5 BLK	4001	94X-2	C			
<CD>	DTBD	016	0 6	0 6 BLK	4002	94X-2	NC			
<QD1>	DTBD	079	0 7	0 7 BLK	3023	83B	NO			
<QD1>	DTBD	080	0 8	0 8 BLK	3022	83B	C			
<QD1>	DTBD	081	0 9	0 9 BLK	3024	83B	NC			
<CD>	DTBD	006	1 0	1 0 BLK	4054	83ISO	NO			
<CD>	DTBD	007	1 1	1 1 BLK	4055	83ISO	C			
<CD>	DTBD	008	1 2	1 2 BLK	4056	83ISO	NC			
			1 3	1 3 BLK	SP					
			1 4	1 4 BLK	SP					
			1 5	1 5 BLK	SP					
			1 6	1 6 BLK	SP					
			1 7	1 7 BLK	SP					
			1 8	1 8 BLK	SP					
			1 9	1 9 BLK	SP					

NOTES FOR CABLE C550C

NUMBER NOTES

1 CONNECTIONS TO CUSTOMER EQUIPMENT ARE TO BE DETERMINED AT SITE.

CABLE: C550D CONNECTS: 101 TURBINE CONTROL PANEL
254 CUSTOMER DEVICES-PANELS

FROM LOCATION 101			CABLE		DEVICE			TO LOCATION 254		
INT LOC	TERM BD	TERM	PIN	COND	WIRE #	DEVICE	DESC	INT LOC	TERM BD	TERM
<CD>	DTBD	010	0 1	0 1 BLK	4003	83P	NO			
<CD>	DTBD	011	0 2	0 2 BLK	4004	83P	C			
<CD>	DTBD	012	0 3	0 3 BLK	4005	83P	NC			
<CD>	DTBD	022	0 4	0 4 BLK	4009	83FXP-2	NO			
<CD>	DTBD	023	0 5	0 5 BLK	4010	83FXP-2	C			
<CD>	DTBD	024	0 6	0 6 BLK	4011	83FXP-2	NC			
<CD>	DTBD	018	0 7	0 7 BLK	4012	FUEL_XFER_TIMER	NO			
<CD>	DTBD	019	0 8	0 8 BLK	4013	FUEL_XFER_TIMER	C			
<CD>	DTBD	020	0 9	0 9 BLK	4014	FUEL_XFER_TIMER	NC			
			1 0	1 0 BLK	SP					
			1 1	1 1 BLK	SP					
			1 2	1 2 BLK	SP					
			1 3	1 3 BLK	SP					
			1 4	1 4 BLK	SP					
			1 5	1 5 BLK	SP					
			1 6	1 6 BLK	SP					
			1 7	1 7 BLK	SP					
			1 8	1 8 BLK	SP					
			1 9	1 9 BLK	SP					

NOTES FOR CABLE C550D

NUMBER NOTES

1 CONNECTIONS TO CUSTOMER EQUIPMENT ARE TO BE DETERMINED AT SITE.

CABLE: C551A CONNECTS: 101 TURBINE CONTROL PANEL
254 CUSTOMER DEVICES--PANELS

FROM LOCATION 101			CABLE		DEVICE			TO LOCATION 254		
INT LOC	TERM BD	TERM	PIN	COND	WIRE #	DEVICE	DESC	INT LOC	TERM BD	TERM
<CD>	DTBB	085	0 1	0 1 BLK	1021	CA1/START	NO			
<CD>	DTBB	086	0 2	0 2 BLK	107	CA1/START	NO			
<QD1>	DTBB	083	0 3	0 3 BLK	1023	CA1/STOP	NO			
<QD1>	DTBB	084	0 4	0 4 BLK	107	CA1/STOP	NO			
<QD1>	DTBB	087	0 5	0 5 BLK	1024	CA43PB/BASE	NO			
<QD1>	DTBB	088	0 6	0 6 BLK	107	CA43PB/BASE	NO			
<QD1>	DTBB	081	0 7	0 7 BLK	4015	CA43S/AUTO_SYNH	NO			
<QD1>	DTBB	082	0 8	0 8 BLK	4016	CA43S/AUTO_SYNH	NO			
<QD1>	DTBB	011	0 9	0 9 BLK	4017	CA43S/SYNC_OFF	NO			
<QD1>	DTBB	012	1 0	1 0 BLK	4018	CA43S/SYNC_OFF	NO			
<CD>	DTBB	043	1 1	1 1 BLK	4030	30XFRMR-1	NO			
<CD>	DTBB	044	1 2	1 2 BLK	4031	30XFRMR-1	NO			

NOTES FOR CABLE C551A

NUMBER NOTES

1 CONNECTIONS TO CUSTOMER EQUIPMENT ARE TO BE DETERMINED AT SITE.

CABLE: C551B CONNECTS: 101 TURBINE CONTROL PANEL
254 CUSTOMER DEVICES--PANELS

FROM LOCATION 101			CABLE		DEVICE			TO LOCATION 254		
INT LOC	TERM BD	TERM	PIN	COND	WIRE #	DEVICE	DESC	INT LOC	TERM BD	TERM
<QD1>	DTBB	095	0 1	0 1 BLK	1028	CA70R4/CS/LOWER	NO			
<QD1>	DTBB	096	0 2	0 2 BLK	107	CA70R4/CS/LOWER	NO			
<QD1>	DTBB	093	0 3	0 3 BLK	1027	CA70R4/CS/RAISE	NO			
<QD1>	DTBB	094	0 4	0 4 BLK	107	CA70R4/CS/RAISE	NO			
<QD1>	DTBB	099	0 5	0 5 BLK	1061	CA90R4/CS/LOWER	NO			
<QD1>	DTBB	100	0 6	0 6 BLK	107	CA90R4/CS/LOWER	NO			
<QD1>	DTBB	097	0 7	0 7 BLK	1060	CA90R4/CS/RAISE	NO			
<QD1>	DTBB	098	0 8	0 8 BLK	107	CA90R4/CS/RAISE	NO			
<CD>	DTBB	099	0 9	0 9 BLK	4032	43CEMS-CAL	NO			
<CD>	DTBB	100	1 0	1 0 BLK	4033	43CEMS-CAL	NO			
<CD>	DTBA	089	1 1	1 1 BLK	4034	30WW-2	NO			
<CD>	DTBA	090	1 2	1 2 BLK	4035	30WW-2	NO			

NOTES FOR CABLE C551B

NUMBER NOTES

1 CONNECTIONS TO CUSTOMER EQUIPMENT ARE TO BE DETERMINED AT SITE.

CABLE: C551C CONNECTS: 101 TURBINE CONTROL PANEL
254 CUSTOMER DEVICES--PANELS

FROM LOCATION 101			CABLE		DEVICE			TO LOCATION 254		
INT LOC	TERM BD	TERM	PIN	COND	WIRE #	DEVICE	DESC	INT LOC	TERM BD	TERM
<CD>	DTBB	035	0 1	0 1 BLK	2155	CUS-PERM_START	NO			
<CD>	DTBB	036	0 2	0 2 BLK	107	CUS-PERM_START	NO			
<QD1>	DTBB	051	0 3	0 3 BLK	2169	4CT	NO			
<QD1>	DTBB	052	0 4	0 4 BLK	107	4CT	NO			
<CD>	DTBA	091	0 5	0 5 BLK	4019	30CEMS-1	NO			
<CD>	DTBA	092	0 6	0 6 BLK	4020	30CEMS-1	NO			
<CD>	DTBB	097	0 7	0 7 BLK	4021	30CEMS-2	NO			
<CD>	DTBB	098	0 8	0 8 BLK	4022	30CEMS-2	NO			
<CD>	DTBB	031	0 9	0 9 BLK	4023	30DRN_TNK-1	NO			
<CD>	DTBB	032	1 0	1 0 BLK	4024	30DRN_TNK-1	NO			
<CD>	DTBB	033	1 1	1 1 BLK	4028	30DRN_TNK-2	NO			
<CD>	DTBB	034	1 2	1 2 BLK	4029	30DRN_TNK-2	NO			

NOTES FOR CABLE C551C

NUMBER	NOTES
1	CONNECTIONS TO CUSTOMER EQUIPMENT ARE TO BE DETERMINED AT SITE.

CABLE: 553A

101 TURBINE CONTROL PANEL
254 CUSTOMER DEVICES--PANELS

FROM LOCATION 101			CABLE		DEVICE			TO LOCATION 254		
INT LOC	TERM DB	TERM	PIN	COND	WIRE #	DEVICE	DESC	INT LOC	TERM DB	TERM
<C>	SHD	COM		0 1 SHD	E4038	02_PPM	SHD			
<C>	CTBA	059	0 1	0 1 ORN	4038	02_PPM	P			
<C>	CTBA	060	0 2	0 1 BLK	4039	02_PPM	N			
<C>	SHD	COM		0 2 SHD	E4040	NOX_PPM	SHD			
<C>	CTBA	055	0 3	0 2 ORN	4040	NOX_PPM	P			
<C>	CTBA	056	0 4	0 2 BLK	4041	NOX_PPM	N			
<C>	SHD	COM		0 3 SHD	E4036	CO_PPM	SHD			
<C>	CTBA	053	0 5	0 3 ORN	4036	CO_PPM	P			
<C>	CTBA	054	0 6	0 3 BLK	4037	CO_PPM	N			
				0 4 SHD			SHD			
			0 7	0 4 ORN	SP					
			0 8	0 4 BLK	SP					
				0 5 SHD			SHD			
			0 9	0 5 ORN	SP					
			1 0	0 5 BLK	SP					
				0 6 SHD			SHD			
			1 1	0 6 ORN	SP					
			1 2	0 6 BLK	SP					
				0 7 SHD			SHD			
			1 3	0 7 ORN	SP					
			1 4	0 7 BLK	SP					
				0 8 SHD			SHD			
			1 5	0 8 ORN	SP					
			1 6	0 8 BLK	SP					
				0 9 SHD			SHD			
			1 7	0 9 ORN	SP					
			1 8	0 9 BLK	SP					

NOTES FOR CABLE C553A

NUMBER NOTES

1 CONNECTIONS TO CUSTOMER EQUIPMENT ARE TO BE DETERMINED AT SITE.

CABLE: C553B

101 TURBINE CONTROL PANEL
254 CUSTOMER DEVICES--PANELS

FROM LOCATION 101			CABLE		DEVICE			TO LOCATION 254		
INT LOC	TERM DB	TERM	PIN	COND	WIRE #	DEVICE	DESC	INT LOC	TERM DB	TERM
<C>	SHD	COM		0 1 SHD	E4042	GEN_FREQ	SHD			
<C>	CTBA	012	0 1	0 1 ORN	4042	GEN_FREQ	P			
<C>	CTBA	014	0 2	0 1 BLK	4043	GEN_FREQ	N			
<C>	SHD	COM		0 2 SHD	E4044	GEN_PF	SHD			
<C>	CTBA	009	0 3	0 2 ORN	4044	GEN_PF	P			
<C>	CTBA	010	0 4	0 2 BLK	4045	GEN_PF	N			
<C>	SHD	COM		0 3 SHD	E4046	GEN_VARS	SHD			
<C>	CTBA	007	0 5	0 3 ORN	4046	GEN_VARS	P			
<C>	CTBA	008	0 6	0 3 BLK	4047	GEN_VARS	N			
<C>	SHD	COM		0 4 SHD	E4048	GEN_VOLTS	SHD			
<C>	CTBA	011	0 7	0 4 ORN	4048	GEN_VOLTS	P			
<C>	CTBA	012	0 8	0 4 BLK	4049	GEN_VOLTS	N			
<C>	SHD	COM		0 5 SHD	E4050	GEN_WATTS	SHD			
<C>	CTBA	005	0 9	0 5 ORN	4050	GEN_WATTS	P			
<C>	CTBA	006	1 0	0 5 BLK	4051	GEN_WATTS	N			
<C>	SHD	COM		0 6 SHD	E4052	GEN_WATTS_CEM	SHD			
<C>	CTBA	003	1 1	0 6 ORN	4052	GEN_WATTS_CEM	P			
<C>	CTBA	004	1 2	0 6 BLK	4053	GEN_WATTS_CEM	N			
				0 7 SHD			SHD			
			1 3	0 7 ORN	SP					
			1 4	0 7 BLK	SP					
				0 8 SHD			SHD			
			1 5	0 8 ORN	SP					
			1 6	0 8 BLK	SP					
				0 9 SHD			SHD			
			1 7	0 9 ORN	SP					
			1 8	0 9 BLK	SP					

NOTES FOR CABLE C553B

NUMBER	NOTES
1	CONNECTIONS TO CUSTOMER EQUIPMENT ARE TO BE DETERMINED AT SITE.

CABLE: C554 CONNECTS: 101 TURBINE CONTROL PANEL
254 CUSTOMER DEVICES - PANELS

FROM LOCATION 101			CABLE		DEVICE			TO LOCATION 254		
INT LOC	TERM DB	TERM	PIN	COND	WIRE #	DEVICE	DESC	INT LOC	TERM DB	TERM
<CD>	DTBB	0 2 9	0 1	0 1 BLK	7204	R5E	NC1			
<CD>	DTBB	0 3 0	0 2	0 2 BLK	107	R5E	NC2			
<P>	PTBA	0 4 5	0 3	0 3 BLK	2016	R5E	NC1			
<P>	PTBA	0 4 6	0 4	0 4 BLK	2017	R5E	NC2			

NOTES FOR CABLE C554

NUMBER NOTES

1 CONNECTIONS TO CUSTOMER EQUIPMENT ARE TO BE DETERMINED AT SITE.

CABLE: C575 CONNECTS: 149 CRANKING MOTOR
201 LIMIT AMP

FROM LOCATION 149			CABLE		DEVICE			TO LOCATION 201		
INT LOC	TERM DB	TERM	PIN	COND	WIRE #	DEVICE	DESC	INT LOC	TERM DB	TERM
	88CR	T1	0 1	0 1 BLK	T1-CR	88CR-1	T1		3PH_OUTPUT	T1
	88CR	T2	0 2	0 2 BLK	T2-CR	88CR-1	T2		3PH_OUTPUT	T2
	88CR	T3	0 3	0 3 BLK	T3-CR	88CR-1	T3		3PH_OUTPUT	T3

CABLE: C583 CONNECTS: 183 AUXILIARY POWER TRANSFORMER
334 PEECC MOTOR CONTROL CENTER

FROM LOCATION 183			CABLE		DEVICE			TO LOCATION 334		
INT LOC	TERM DB	TERM	PIN	COND	WIRE #	DEVICE	DESC	INT LOC	TERM DB	TERM
	AC_BKR_F1	L1	01	0 1 BLK	L1	3PH_SUPPLY	T1	MCC1	FDR	T1
	AC_BKR_F1	L1	02	0 2 BLK	L1	3PH_SUPPLY	T1	MCC1	FDR	T1
	AC_BKR_F1	L2	03	0 3 BLK	L2	3PH_SUPPLY	T2	MCC1	FDR	T2
	AC_BKR_F1	L2	04	0 4 BLK	L2	3PH_SUPPLY	T2	MCC1	FDR	T2
	AC_BKR_F1	L3	05	0 5 BLK	L3	3PH_SUPPLY	T3	MCC1	FDR	T3
	AC_BKR_F1	L3	06	0 6 BLK	L3	3PH_SUPPLY	T3	MCC1	FDR	T3

CABLE: C584 CONNECTS: 183 AUXILIARY POWER TRANSFORMER
334 PEECC MOTOR CONTROL CENTER

FROM LOCATION 183			CABLE		DEVICE			TO LOCATION 334		
INT LOC	TERM DB	TERM	PIN	COND	WIRE #	DEVICE	DESC	INT LOC	TERM DB	TERM
	AC_BKR_F2	L1	01	0 1 BLK	L1	3PH_SUPPLY	T1	MCC2	FDR	T1
	AC_BKR_F2	L1	02	0 2 BLK	L1	3PH_SUPPLY	T1	MCC2	FDR	T1
	AC_BKR_F2	L2	03	0 3 BLK	L2	3PH_SUPPLY	T2	MCC2	FDR	T2
	AC_BKR_F2	L2	04	0 4 BLK	L2	3PH_SUPPLY	T2	MCC2	FDR	T2
	AC_BKR_F2	L3	05	0 5 BLK	L3	3PH_SUPPLY	T3	MCC2	FDR	T3
	AC_BKR_F2	L3	06	0 6 BLK	L3	3PH_SUPPLY	T3	MCC2	FDR	T3

CABLE: C590 CONNECTS: 101 TURBINE CONTROL PANEL
201 LIMIT AMP

FROM LOCATION 101			CABLE		DEVICE			TO LOCATION 256		
INT LOC	TERM DB	TERM	PIN	COND	WIRE #	DEVICE	DESC	INT LOC	TERM DB	TERM
<CD>	DTBC	097	0 1	0 1 BLK	1298	4CR	NO		TB02	002
<CD>	DTBC	098	0 2	0 2 BLK	1297	4CR	C		TB02	001
<CD>	DTBA	023	0 3	0 3 BLK	1640	50/51CRA	NC		TB02	007
<CD>	DTBA	025	0 4	0 4 BLK	607	50/51CR-T	NC		TB02	010
<CD>	DTBA	027	0 5	0 5 BLK	2116	52CR-1	NC		TB02	004
<CD>	DTBA	026	0 6	0 6 BLK	107	P125VDC	COM		TB02	005

NOTES FOR CABLE C590

NUMBER	NOTES
1	CONDUCTOR 06 (107) IS THE COMMON FOR THE SIGNALS ON CONDUCTORS 03 THRU. 05.

CABLE: C591 CONNECTS: 108 AUXILIARY RELAY PANEL
183 AUXILIARY POWER TRANSFORMER

FROM LOCATION 108			CABLE		DEVICE			TO LOCATION 183		
INT LOC	TERM DB	TERM	PIN	COND	WIRE #	DEVICE	DESC	INT LOC	TERM DB	TERM
	TBV	001	0 1	0 1 BLK	1724	CT45	0 1		STB3	002
	TBV	002	0 2	0 2 BLK	1725	CT45	0 2		STB3	001

NOTES FOR CABLE C591

NUMBER NOTES

1 REMOVE THE FOLLOWING JUMPERS IN (183) AUXILIARY POWER TRANSFORMER AFTER CUSTOMER CONNECTIONS ARE INSTALLED: STB3-(003) TO STB3-(GNDR) STB3-(003) TO STB3-(002)

CABLE: C593 CONNECTS: 108 AUXILIARY RELAY PANEL
183 AUXILIARY POWER TRANSFORMER

FROM LOCATION 108			CABLE		DEVICE			TO LOCATION 183		
INT LOC	TERM DB	TERM	PIN	COND	WIRE #	DEVICE	DESC	INT LOC	TERM DB	TERM
	TBG	0 0 1	0 1	01 BLK	1756	CT42A	0 1		STB2	002
	TBG	0 0 2	0 2	02 BLK	1757	CT43A	0 1		STB2	004
	TBG	0 0 3	0 3	03 BLK	1758	CT44A	0 1		STB2	006
	TBG	0 0 4	0 4	04 BLK	1759	CT_COM	0 2		STB2	003

NOTES FOR CABLE C593

NUMBER NOTES

1 REMOVE THE FOLLOWING JUMPERS IN (183) AUXILIARY POWER TRANSFORMER AFTER CUSTOMER CONNECTIONS ARE INSTALLED: STB2-(001) TO STB2-(002) STB2-(002) TO STB2-(004) STB2-(004) TO STB2-(006)

CABLE: C596 CONNECTS: 201 LIMIT AMP
334 PEECC MOTOR CONTROL CENTER

FROM LOCATION 201			CABLE		DEVICE			TO LOCATION 334		
INT LOC	TERM DB	TERM	PIN	COND	WIRE #	DEVICE	DESC	INT LOC	TERM DB	TERM
	TB01	0 1 1	0 1	0 1 BLK	904	125VDC	POS	DC MCC	PNLBD	3A
	TB01	0 1 2	0 2	0 2 BLK	905	125VDC	NEG	DC MCC	PNLBD	3B

CABLE: C598 CONNECTS: 201 LIMIT AMP
329 CRANKING MOTOR TRANSFORMER

FROM LOCATION 201			CABLE		DEVICE			TO LOCATION 329		
INT LOC	TERM DB	TERM	PIN	COND	WIRE #	DEVICE	DESC	INT LOC	TERM DB	TERM
	3PH_FEEDER	L1	0 1	01 BLK	L1	3PH_SUPPLY	T1		XMFR_OUTPUT	X1
	3PH_FEEDER	L2	0 2	02 BLK	L2	3PH_SUPPLY	T2		XMFR_OUTPUT	X2
	3PH_FEEDER	L3	0 3	03 BLK	L3	3PH_SUPPLY	T3		XMFR_OUTPUT	X3

CABLE: C607 CONNECTS: 101 TURBINE CONTROL PANEL
225 RELATIVE HUMIDITY SENSOR

FROM LOCATION 101			CABLE		DEVICE			TO LOCATION 225		
INT LOC	TERM DB	TERM	PIN	COND	WIRE #	DEVICE	DESC	INT LOC	TERM DB	TERM
<R>	SHD	COM		0 1 SHD	E9839	96TD-1	SHD			
<R>	TBQB	0 4 7	0 1	0 1 ORN	9839	96TD-1	SIG+		TM1	0 0 1
<R>	TBQB	0 4 8	0 2	0 1 BLK	9840	96TD-1	SIG-		TM1	0 0 2

CABLE: C607A CONNECTS: 225 RELATIVE HUMIDITY SENSOR
339 JB298 PEECC LEVEL 3

FROM LOCATION 225			CABLE		DEVICE			TO LOCATION 339		
INT LOC	TERM DB	TERM	PIN	COND	WIRE #	DEVICE	DESC	INT LOC	TERM DB	TERM
	TB1	0 0 1	0 1	0 1 BLK	548	96TD-1	L		TBP	0 0 3
	TB1	0 0 2	0 2	0 2 BLK	2503-8	96TD-1	N		TBP	0 0 4
			0 3	0 3 BLK	SP					

NOTES FOR CABLE C607A

NUMBER	NOTES
1	ADD A 3 TO 4 INCH WHITE SLEEVE, PER NEC CODE, TO INDICATE AC NEUTRAL ON CONDUCTOR 02.

CABLE: C610A

CONNECTS: 102 GENERATOR CONTROL PANEL
254 CUSTOMER DEVICES--PANELS

FROM LOCATION 102			CABLE		DEVICE			TO LOCATION 254		
INT LOC	TERM DB	TERM	PIN	COND	WIRE #	DEVICE	DESC	INT LOC	TERM DB	TERM
	TBJJ	001	01	01 BLK	4716	86G-1	NO4			
	TBJJ	002	02	02 BLK	4717	TS-10	11			
	TBJJ	003	03	03 BLK	4718	86G-1	NO5			
	TBJJ	004	04	04 BLK	4719	TS-10	13			
	TBJJ	005	05	05 BLK	4720	86G-1	NO6			
	TBJJ	006	06	06 BLK	4721	TS-10	15			
	TBJJ	007	07	07 BLK	4722	TS-8	18			
	TBJJ	008	08	08 BLK	4723	TS-8	16			
	TBJJ	009	09	09 BLK	4724	TS-9	6			
	TBJJ	010	10	10 BLK	4725	TS-9	4			
	TBJJ	011	11	11 BLK	4726	TS-9	10			
	TBJJ	012	12	12 BLK	4727	TS-9	8			

NOTES FOR CABLE C610A

NUMBER	NOTES
1	CONNECTIONS TO CUSTOMER EQIUPMENT ARE TO BE DETERMINED AT SITE

CABLE: C610B CONNECTS: 108 AUXILIARY RELAY PANEL
254 CUSTOMER DEVICES--PANELS

FROM LOCATION 108			CABLE		DEVICE			TO LOCATION 254		
INT LOC	TERM DB	TERM	PIN	COND	WIRE #	DEVICE	DESC	INT LOC	TERM DB	TERM
	TBK	001	01	01 BLK	4736	86G-2	NO			
	TBK	002	02	02 BLK	4736A	TS-22	9			
	TBK	003	03	03 BLK	4737	86G-2	NO			
	TBK	004	04	04 BLK	4737A	TS-22	11			
	TBK	005	05	05 BLK	4738	86G-2	NO			
	TBK	006	06	06 BLK	4738A	TS-22	13			
	TBK	007	07	07 BLK	473	TS-20	14			
	TBK	008	08	08 BLK	4739A	TS-20	12			
	TBK	009	09	09 BLK	4740	TS-21	6			
	TBK	010	10	10 BLK	4740A	TS-21	4			
	TBK	011	11	11 BLK	4741	TS-21	10			
	TBK	012	12	12 BLK	4741A	TS-21	8			

NOTES FOR CABLE C610B

NUMBER	NOTES
1	CONNECTIONS TO CUSTOMER EQIUPMENT ARE TO BE DETERMINED AT SITE

CABLE: C610C CONNECTS: 108 AUXILIARY RELAY PANEL
254 CUSTOMER DEVICES--PANELS

FROM LOCATION 108			CABLE		DEVICE			TO LOCATION 254		
INT LOC	TERM DB	TERM	PIN	COND	WIRE #	DEVICE	DESC	INT LOC	TERM DB	TERM
	TBE	001	01	01 BLK	4766	86RE	NO			
	TBE	002	02	02 BLK	4766A	TS-29	9			
	TBE	003	03	03 BLK	4767	86RE	NO			
	TBE	004	04	04 BLK	4767A	TS-29	11			
	TBE	005	05	05 BLK	4768	86RE	NO			
	TBE	006	06	06 BLK	4768A	TS-29	13			
	TBE	007	07	07 BLK	4769	TS-33	18			
	TBE	008	08	08 BLK	4769A	TS-33	16			
	TBE	009	09	09 BLK	4770	TS-34	6			
	TBE	010	10	10 BLK	4770A	TS-34	4			
	TBE	011	11	11 BLK	4771	TS-34	10			
	TBE	012	12	12 BLK	4771A	TS-34	8			

NOTES FOR CABLE C610C

NUMBER	NOTES
1	CONNECTIONS TO CUSTOMER EQIUPMENT ARE TO BE DETERMINED AT SITE

CABLE: C610D CONNECTIONS: 108 AUXILIARY RELAY PANEL
254 CUSTOMER DEVICES--PANELS

FROM LOCATION 108			CABLE		DEVICE			TO LOCATION 254		
INT LOC	TERM BD	TERM	PIN	COND	WIRE #	DEVICE	DESC	INT LOC	TERM BD	TERM
	TBN	OO1	O1	O1 BLK	4776	86AT	NO			
	TBN	OO2	O2	O2 BLK	4776A	TS-39	1			
	TBN	OO3	O3	O3 BLK	4777	86AT	NO			
	TBN	OO4	O4	O4 BLK	4777A	TS-39	3			
	TBN	OO5	O5	O5 BLK	4778	86AT	NO			
	TBN	OO6	O6	O6 BLK	4778A	TS-39	5			
	TBN	OO7	O7	O7 BLK	4782	86AT	NO			
	TBN	OO8	O8	O8 BLK	4782A	TS-39	7			
	TBN	OO9	O8	O9 BLK	4783	86AT	NO			
	TBN	O1O	10	10 BLK	4783A	TS-39	9			
			11	11 BLK	SP					
			12	12 BLK	SP					

NOTES FOR CABLE C610D

NUMBER NOTES

1 CONNECTIONS TO CUSTOMER EQUIPMENT ARE TO BE DETERMINED AS SITE.

CABLE: C610E CONNECTIONS: 108 AUXILIARY RELAY PANEL
254 CUSTOMER DEVICES--PANEL

FROM LOCATION 108			CABLE		DEVICE			TO LOCATION 254		
INT LOC	TERM BD	TERM	PIN	COND	WIRE #	DEVICE	DESC	INT LOC	TERM BD	TERM
	TBJ	OO7	O1	O1 BLK	4746	86BF	NO			
	TBJ	OO8	O2	O2 BLK	4746A	TS-28	15			
	TBJ	OO9	O3	O3 BLK	4747	86BF	NO			
	TBJ	O1O	O4	O4 BLK	4747A	TS-28	18			
	TBJ	O11	O5	O5 BLK	4748	86BF	NO			
	TBJ	O12	O6	O6 BLK	4748A	TS-28	19			
	TBM	OO1	O7	O7 BLK	4749	TS-37	14			
	TBM	OO2	O8	O8 BLK	4749A	TS-37	12			
	TBM	OO3	O9	O9 BLK	4750	TS-37	18			
	TBM	OO4	10	10 BLK	4750A	TS-37	16			
	TBM	OO5	11	11 BLK	4751	TS-26	10			
	TBM	OO6	12	12 BLK	4751A	TS-26	8			

NOTES FOR CABLE C610E

NUMBER	NOTES
1	CONNECTIONS TO CUSTOMER EQUIPMENT ARE TO BE DETERMINED AT SITE.

CABLE: C610F CONNECTIONS: 108 AUXILIARY RELAY PANEL
254 CUSTOMER DEVICES--PANEL

FROM LOCATION 108			CABLE		DEVICE			TO LOCATION 254		
INT LOC	TERM BD	TERM	PIN	COND	WIRE #	DEVICE	DESC	INT LOC	TERM BD	TERM
	TBAA	OO1	O1	O1 BLK	4742	86G-2	NO			
	TBAA	OO2	O2	O2 BLK	4742A	TS-22	15			
	TBAA	OO3	O3	O3 BLK	4743	86G-2	NO			
	TBAA	OO4	O4	O4 BLK	4743A	TS-22	17			
	TBAA	OO5	O5	O5 BLK	4744	TS-21	14			
	TBAA	OO6	O6	O6 BLK	4744A	TS-21	12			
	TBAA	OO7	O7	O7 BLK	4745	TS-21	18			
	TBAA	OO8	O8	O8 BLK	4745A	TS-21	16			
			O9	O9 BLK	SP					
			10	10 BLK	SP					
			11	11 BLK	SP					
			12	12 BLK	SP					

NOTES FOR CABLE C610F

NUMBER NOTES

1 CONNECTIONS TO CUSTOMER EQUIPMENT ARE TO BE DETERMINED AT SITE.

CABLE: C610FA CONNECTIONS: 108 AUXILIARY RELAY PANEL
254 CUSTOMER DEVICES--PANEL

FROM LOCATION 108			CABLE		DEVICE			TO LOCATION 254		
INT LOC	TERM BD	TERM	PIN	COND	WIRE #	DEVICE	DESC	INT LOC	TERM BD	TERM
	TBL	OO1	O1	O1 BLK	4742	86G-2	NO			
	TBL	OO2	O2	O2 BLK	4742A	TS-22	15			
	TBL	OO3	O3	O3 BLK	4743	86G-2	NO			
	TBL	OO4	O4	O4 BLK	4743A	TS-22	17			
	TBL	OO5	O5	O5 BLK	4744	TS-21	14			
	TBL	OO6	O6	O6 BLK	4744A	TS-21	12			
	TBL	OO7	O7	O7 BLK	4745	TS-21	18			
	TBL	OO8	O8	O8 BLK	4745A	TS-21	16			
			O9	O9 BLK	SP					
			10	10 BLK	SP					
			11	11 BLK	SP					
			12	12 BLK	SP					

NOTES FOR CABLE C610FA

NUMBER NOTES

1 CONNECTIONS TO CUSTOMER EQUIPMENT ARE TO BE DETERMINED AT SITE.

CABLE: C610FB CONNECTIONS: 108 AUXILIARY RELAY PANEL
254 CUSTOMER DEVICES--PANEL

FROM LOCATION 108			CABLE		DEVICE			TO LOCATION 254		
INT LOC	TERM BD	TERM	PIN	COND	WIRE #	DEVICE	DESC	INT LOC	TERM BD	TERM
	TBR	OO1	O1	O1 BLK	4752	86BF	NO			
	TBR	OO2	O2	O2 BLK	4752A	TS-32	17			
	TBR	OO3	O3	O3 BLK	4756	86BF	NO			
	TBR	OO4	O4	O4 BLK	4756A	TS-32	19			
	TBC	OO9	O5	O5 BLK	4754	TS-17	14			
	TBC	O10	O6	O6 BLK	4754A	TS-17	12			
	TBC	O11	O7	O7 BLK	4755	TS-17	18			
	TBC	O12	O8	O8 BLK	4755A	TS-17	16			
			O9	O9 BLK	SP					
			10	10 BLK	SP					
			11	11 BLK	SP					
			12	12 BLK	SP					

NOTES FOR CABLE C610FB

NUMBER	NOTES
1	CONNECTIONS TO CUSTOMER EQUIPMENT ARE TO BE DETERMINED AT SITE.

CABLE: C610FC CONNECTIONS: 108 AUXILIARY RELAY PANEL
254 CUSTOMER DEVICES--PANEL

FROM LOCATION 108			CABLE		DEVICE			TO LOCATION 254		
INT LOC	TERM BD	TERM	PIN	COND	WIRE #	DEVICE	DESC	INT LOC	TERM BD	TERM
	TBF	OO1	O1	O1 BLK	4772	86RE	NO			
	TBF	OO2	O2	O2 BLK	4772A	TS-29	15			
	TBF	OO3	O3	O3 BLK	4773	86RE	NO			
	TBF	OO4	O4	O4 BLK	4773A	TS-32	13			
	TBF	OO5	O5	O5 BLK	4774	TS-34	14			
	TBF	OO6	O6	O6 BLK	4774A	TS-34	12			
	TBF	OO7	O7	O7 BLK	4775	TS-34	18			
	TBF	OO8	O8	O8 BLK	4775A	TS-34	16			
			O9	O9 BLK	SP					
			10	10 BLK	SP					
			11	11 BLK	SP					
			12	12 BLK	SP					

NOTES FOR CABLE C610FC

NUMBER	NOTES
1	CONNECTIONS TO CUSTOMER EQUIPMENT ARE TO BE DETERMINED AT SITE.

CABLE: C610H CONNECTIONS: 102 GENERATOR CONTROL PANEL
254 CUSTOMER DEVICES--PANEL

FROM LOCATION 102			CABLE		DEVICE			TO LOCATION 254		
INT LOC	TERM BD	TERM	PIN	COND	WIRE #	DEVICE	DESC	INT LOC	TERM BD	TERM
	TBMM	OO1	O1	O1 BLK	4756	86T1	NO			
	TBMM	OO2	O2	O2 BLK	4756A	TS-2	11			
	TBMM	OO3	O3	O3 BLK	4757	86T1	NO			
	TBMM	OO4	O4	O4 BLK	4757A	86T1	12			
	TBMM	OO5	O5	O5 BLK	4758	TS-2	NO			
	TBMM	OO6	O6	O6 BLK	4758A	TS-7	15			
	TBS	OO9	O7	O7 BLK	4759	TS-7	10			
	TBS	O10	O8	O8 BLK	4759A	TS-7	8			
	TBS	O11	O9	O9 BLK	4760	TS-7	14			
	TBS	O12	10	10 BLK	4760A	TS-7	12			
	TBHH	OO5	11	11 BLK	4761	TS-7	18			
	TBHH	6	12	12 BLK	4761A	TS-7	16			

NOTES FOR CABLE C610H

NUMBER	NOTES
1	CONNECTIONS TO CUSTOMER EQUIPMENT ARE TO BE DETERMINED AT SITE.

CABLE: C610HA CONNECTIONS: 102 GENERATOR CONTROL PANEL
254 CUSTOMER DEVICES--PANEL

FROM LOCATION 102			CABLE		DEVICE			TO LOCATION 254		
INT LOC	TERM BD	TERM	PIN	COND	WIRE #	DEVICE	DESC	INT LOC	TERM BD	TERM
	TBMM	OO7	O1	O1 BLK	4762	86T1	NO			
	TBMM	OO8	O2	O2 BLK	4762A	TS-2	17			
	TBMM	OO9	O3	O3 BLK	4763	87T1	NO			
	TBMM	O10	O4	O4 BLK	4763A	TS-2	19			
	TBHH	OO7	O5	O5 BLK	4764	TS-4	18			
	TBHH	OO8	O6	O6 BLK	4764A	TS-4	16			
	TBHH	OO9	O7	O7 BLK	4765	TS-6	18			
	TBHH	O10	O8	O8 BLK	4765A	TS-6	16			
			O9	O9 BLK	SP					
			10	10 BLK	SP					
			11	11 BLK	SP					
			12	12 BLK	SP					

NOTES FOR CABLE C610H

NUMBER	NOTES
1	CONNECTIONS TO CUSTOMER EQUIPMENT ARE TO BE DETERMINED AT SITE.

CABLE: C610J CONNECTIONS: 108 AUXILIARY RELAY PANEL
254 CUSTOMER DEVICES--PANEL

FROM LOCATION 108			CABLE		DEVICE			TO LOCATION 254		
INT LOC	TERM BD	TERM	PIN	COND	WIRE #	DEVICE	DESC	INT LOC	TERM BD	TERM
	TBS	OO1	O1	O1 BLK	4779	TS-26	18			
	TBS	OO2	O2	O2 BLK	4779A	TS-26	16			
	TBS	OO3	O3	O3 BLK	4780	TS-38	6			
	TBS	OO4	O4	O4 BLK	4780A	TS-38	4			
	TBS	OO5	O5	O5 BLK	4781	TS-38	10			
	TBS	OO6	O6	O6 BLK	4781A	TS-38	8			
	TBS	OO7	O7	O7 BLK	4784	TS-38	14			
	TBS	OO9	O8	O8 BLK	4784A	TS-38	12			
	TBS	O10	O9	O9 BLK	4785	TS-38	18			
			10	10 BLK	4785A	TS-38	16			
			11	11 BLK	SP					
			12	12 BLK	SP					

NOTES FOR CABLE C610J

NUMBER	NOTES
1	CONNECTIONS TO CUSTOMER EQUIPMENT ARE TO BE DETERMINED AT SITE.

CABLE: C610V CONNECTIONS: 102 GENERATOR CONTROL PANEL
254 CUSTOMER DEVICES--PANEL

FROM LOCATION 102			CABLE		DEVICE			TO LOCATION 254		
INT LOC	TERM BD	TERM	PIN	COND	WIRE #	DEVICE	DESC	INT LOC	TERM BD	TERM
	TBQ	O11	O1	O1 BLK	4791	86T1	NO			
	TBQ	O12	O2	O2 BLK	4791A	TS-7	19			
			O3	O3 BLK	SP					
			O4	O4 BLK	SP					
			O5	O5 BLK	SP					
			O6	O6 BLK	SP					
			O7	O7 BLK	SP					
			O8	O8 BLK	SP					
			O9	O9 BLK	SP					
			10	10 BLK	SP					
			11	11 BLK	SP					
			12	12 BLK	SP					

NOTES FOR CABLE C610V

NUMBER NOTES

1 CONNECTIONS TO CUSTOMER EQUIPMENT ARE TO BE DETERMINED AT SITE.

CABLE: C610W CONNECTIONS: 108 AUXILIARY RELAY PANEL
254 CUSTOMER DEVICES--PANEL

FROM LOCATION 108			CABLE		DEVICE			TO LOCATION 254		
INT LOC	TERM BD	TERM	PIN	COND	WIRE #	DEVICE	DESC	INT LOC	TERM BD	TERM
	TBQ	OO1	O1	O1 BLK	4786	INIT SW FAIL				
	TBQ	OO2	O2	O2 BLK	4786A	INIT SW FAIL				
	TBQ	OO3	O3	O3 BLK	4787	TRIP XTM COOL				
	TBQ	OO4	O4	O4 BLK	4787A	TRIP XTM COOL				
	TBQ	OO5	O5	O5 BLK	4788	TRIP CKT SW				
	TBQ	OO6	O6	O6 BLK	4788A	TRIP CKT SW				
	TBQ	OO7	O7	O7 BLK	4789	BRK CLOSE SW				
	TBQ	OO9	O8	O8 BLK	4789A	BRK CLOSE SW				
	TBQ	O10	O9	O9 BLK	4790	TRIP H2234 REG				
	TBQ	O11	10	10 BLK	4790A	TRIP H2234 REG				
	TBQ	O12	11	11 BLK	4791	TRIP H2234 REGBK				
			12	12 BLK	4791A	TRIP H2234 REGBK				

NOTES FOR CABLE C610W

NUMBER	NOTES
1	CONNECTIONS TO CUSTOMER EQUIPMENT ARE TO BE DETERMINED AT SITE.

CABLE: C611 CONNECTIONS: 102 GENERATOR CONTROL PANEL
254 CUSTOMER DEVICES--PANEL

FROM LOCATION 102			CABLE		DEVICE			TO LOCATION 254		
INT LOC	TERM BD	TERM	PIN	COND	WIRE #	DEVICE	DESC	INT LOC	TERM BD	TERM
	TBFF	OO3	O1	O1 BLK	1148	CUST PERM				
	TBFF	OO4	O2	O2 BLK	1142	CUST PERM				
	TBFF	OO5	O3	O3 BLK	1157	CUST TRIP				
	TBFF	OO6	O4	O4 BLK	1156A	CUST TRIP				
	TBV	OO3	O5	O5 BLK	4057	CUST TRIP				
	TBV	OO4	O6	O6 BLK	4058	CUST TRIP				
	TBFF	OO1	O7	O7 BLK	875	CUST TRIP				
	TBFF	OO2	O8	O8 BLK	876	CUST TRIP				
	TBFF	OO7	O9	O9 BLK	1162	CUST TRIP				
	TBFF	OO8	10	10 BLK	1163	CUST TRIP				
	TBFF	OO9	11	11 BLK	4700	CUST TRIP				
	TBFF	O1O	12	12 BLK	4701	CUST TRIP				

NOTES FOR CABLE C611

NUMBER NOTES

1 CONNECTIONS TO CUSTOMER EQUIPMENT ARE TO BE DETERMINED AT SITE.

2 ROMOVE THE FOLLOWING JUMPERS IN (102) GENERATOR CONTROL PANEL AFTER CUSTOMER CONNECTIONS ARE INSTALLED.

TBFF-(OO1) TO TBFF-(OO2) TO TBFF-(OO3) TO TBFF-(OO4)

CABLE: C611A CONNECTIONS: 102 GENERATOR CONTROL PANEL
254 CUSTOMER DEVICES--PANEL

FROM LOCATION 102			CABLE		DEVICE			TO LOCATION 254		
INT LOC	TERM BD	TERM	PIN	COND	WIRE #	DEVICE	DESC	INT LOC	TERM BD	TERM
	TBFF	O11	O1	O1 BLK	1763	52L TRIP	NO			
	TBFF	O12	O2	O2 BLK	1762	52L TRIP	NO			
	TBGG	OO4	O3	O3 BLK	1134	52L CLOSING CRT	NC			
	TBGG	OO5	O4	O4 BLK	1136	52L CLOSING CRT	NC			
	TBGG	OO6	O5	O5 BLK	1764	H2234 REG & B.U. TRIPS				
	TBGG	OO7	O6	O6 BLK	1765	H2234 REG & B.U. TRIPS				

NOTES FOR CABLE C611A

NUMBER NOTES

1 CONNECTIONS TO CUSTOMER EQUIPMENT ARE TO BE DETERMINED AT SITE.

CABLE: C615D CONNECTIONS: 101 TURBINE CONTROL PANEL
156 FUEL GAS FLOW DEVICES

FROM LOCATION 101			CABLE		DEVICE			TO LOCATION 156		
INT LOC	TERM BD	TERM	PIN	COND	WIRE #	DEVICE	DESC	INT LOC	TERM BD	TERM
‹R›	SHD	COM		O1 SHD	E3316	96FM-1A	SHD			
‹R›	TBQC	O62	O1	O1 ORN	3316	96FM-1A	SIG +		96FM-1A	SIG +
‹R›	TBQC	O63	O2	O1 BLK	3317	96FM-1A	SIG-		96FM-1A	SIG -

NOTES FOR CABLE C611A

NUMBER	NOTES
1	CONNECTIONS TO CUSTOMER EQUIPMENT ARE TO BE DETERMINED AT SITE.

CABLE: C667-1 CONNECTIONS: 101 TURBINE CONTROL PANEL
456 JB010 WATER WASH SKID LEVEL 3

FROM LOCATION 101			CABLE		DEVICE			TO LOCATION 456		
INT LOC	TERM BD	TERM	PIN	COND	WIRE #	DEVICE	DESC	INT LOC	TERM BD	TERM
‹CD›	DTBD	O54	O1	O1 BLK	8518	4WW-1	NO		TBA	OO1
‹CD›	DTBD	O55	O2	O2 BLK	8519	4WW-1	C		TBA	OO2
‹CD›	DTBB	O56	O3	O3 BLK	107	86WWX	C		TBA	OO3
‹CD›	DTBB	O55	O4	O4 BLK	2623	86WWX	NO		TBA	OO4
‹CD›	DTBB	O53	O5	O5 BLK	107	80WW-1	C		TBA	OO5
‹CD›	DTBB	O54	O6	O6 BLK	2634	80WW-1	NO		TBA	OO6
			O7	O7 BLK	SP					
			O8	O8 BLK	SP					
			O9	O9 BLK	SP					
			10	10 BLK	SP					
			11	11 BLK	SP					
			12	12 BLK	SP					

NOTES FOR CABLE C667-1

NUMBER	NOTES
1	UNIT 1 TO W.W. SKID INTERFACE

CABLE: C667-2 CONNECTIONS: 101 TURBINE CONTROL PANEL
456 JB010 WATER WASH SKID LEVEL 3

FROM LOCATION 101			CABLE		DEVICE			TO LOCATION 456		
INT LOC	TERM BD	TERM	PIN	COND	WIRE #	DEVICE	DESC	INT LOC	TERM BD	TERM
‹CD›	DTBD	O54	O1	O1 BLK	8518	4WW-1	NO		TBA	O13
‹CD›	DTBD	O55	O2	O2 BLK	8519	4WW-1	C		TBA	O14
‹CD›	DTBB	O56	O3	O3 BLK	107	86WWX	C		TBA	O15
‹CD›	DTBB	O55	O4	O4 BLK	2623	86WWX	NO		TBA	O16
‹CD›	DTBB	O53	O5	O5 BLK	107	80WW-1	C		TBA	O17
‹CD›	DTBB	O54	O6	O6 BLK	2634	80WW-1	NO		TBA	O18
			O7	O7 BLK	SP					
			O8	O8 BLK	SP					
			O9	O9 BLK	SP					
			10	10 BLK	SP					
			11	11 BLK	SP					
			12	12 BLK	SP					

NOTES FOR CABLE C667-2

NUMBER	NOTES
1	UNIT 2 TO W.W. SKID INTERFACE

CABLE: C667-3 CONNECTIONS: 101 TURBINE CONTROL PANEL
456 JB010 WATER WASH SKID LEVEL 3

FROM LOCATION 101			CABLE		DEVICE			TO LOCATION 456		
INT LOC	TERM BD	TERM	PIN	COND	WIRE #	DEVICE	DESC	INT LOC	TERM BD	TERM
‹CD›	DTBD	O54	O1	O1 BLK	8518	4WW-1	NO		TBB	OO1
‹CD›	DTBD	O55	O2	O2 BLK	8519	4WW-1	C		TBB	OO2
‹CD›	DTBB	O56	O3	O3 BLK	107	86WWX	C		TBB	OO3
‹CD›	DTBB	O55	O4	O4 BLK	2623	86WWX	NO		TBB	OO4
‹CD›	DTBB	O53	O5	O5 BLK	107	80WW-1	C		TBB	OO5
‹CD›	DTBB	O54	O6	O6 BLK	2634	80WW-1	NO		TBB	OO6
			O7	O7 BLK	SP					
			O8	O8 BLK	SP					
			O9	O9 BLK	SP					
			10	10 BLK	SP					
			11	11 BLK	SP					
			12	12 BLK	SP					

NOTES FOR CABLE C667-3

NUMBER	NOTES
1	UNIT 3 TO W.W. SKID INTERFACE

CABLE: C667-4 CONNECTIONS: 101 TURBINE CONTROL PANEL
456 JB010 WATER WASH SKID LEVEL 3

FROM LOCATION 101			CABLE		DEVICE			TO LOCATION 456		
INT LOC	TERM BD	TERM	PIN	COND	WIRE #	DEVICE	DESC	INT LOC	TERM BD	TERM
‹CD›	DTBD	O54	O1	O1 BLK	8518	4WW-1	NO		TBB	O13
‹CD›	DTBD	O55	O2	O2 BLK	8519	4WW-1	C		TBB	O14
‹CD›	DTBB	O56	O3	O3 BLK	107	86WWX	C		TBB	O15
‹CD›	DTBB	O55	O4	O4 BLK	2623	86WWX	NO		TBB	O16
‹CD›	DTBB	O53	O5	O5 BLK	107	80WW-1	C		TBB	O17
‹CD›	DTBB	O54	O6	O6 BLK	2634	80WW-1	NO		TBB	O18
			O7	O7 BLK	SP					
			O8	O8 BLK	SP					
			O9	O9 BLK	SP					
			10	10 BLK	SP					
			11	11 BLK	SP					
			12	12 BLK	SP					

NOTES FOR CABLE C667-4

NUMBER	NOTES
1	UNIT 4 TO W.W. SKID INTERFACE

CABLE: C669 CONNECTIONS: 183 AUXILIARY POWER TRANSFORMER
252 WATER WASH SKID

FROM LOCATION 183			CABLE		DEVICE			TO LOCATION 252		
INT LOC	TERM BD	TERM	PIN	COND	WIRE #	DEVICE	DESC	INT LOC	TERM BD	TERM
	AC BKR F4	L1	O1	O1 BLK	L1	3PH SUPPLY	T1		FUS SW	L01
	AC BKR F5	L2	O2	O2 BLK	L2	3PH SUPPLY	T2		FUS SW	L02
	AC BKR F6	L3	O3	O3 BLK	L3	3PH SUPPLY	T3		FUS SW	L03

CABLE: C671 CONNECTIONS: 101 TURBINE CONTROL PANEL
176 LUBE OIL DEMISTER (TURBINE)

FROM LOCATION 101			CABLE		DEVICE			TO LOCATION 176		
INT LOC	TERM BD	TERM	PIN	COND	WIRE #	DEVICE	DESC	INT LOC	TERM BD	TERM
‹QD1›	DTBA	O66	O1	O1 BLK	107	63QV-1	C		63QV-1	C
‹QD1›	DTBA	O65	O2	O2 BLK	7636	63QV-1	NO		63QV-1	NO
			O3	O3 BLK	SP					

CABLE: C672 CONNECTIONS: 176 LUBE OIL DEMISTER (TURBINE)
334 PEECC MOTOR CONTROL CENTER

FROM LOCATION 101			CABLE		DEVICE			TO LOCATION 176		
INT LOC	TERM BD	TERM	PIN	COND	WIRE #	DEVICE	DESC	INT LOC	TERM BD	TERM
	88QV-1	T1	O1	O1 BLK	T1-QV1	88QV-1	T1	MCC1	QV1-TB	T1
	88QV-1	T2	O2	O2 BLK	T2-QV1	88QV-1	T2	MCC1	QV1-TB	T2
	88QV-1	T3	O3	O3 BLK	T3-QV1	88QV-1	T3	MCC1	QV1-TB	T3

CABLE: C672A CONNECTIONS: 176 LUBE OIL DEMISTER (TURBINE)
339 JB298 PEECC LEVEL 3

FROM LOCATION 176			CABLE		DEVICE			TO LOCATION 339		
INT LOC	TERM BD	TERM	PIN	COND	WIRE #	DEVICE	DESC	INT LOC	TERM BD	TERM
	23QV-2	H1	O1	O1 BLK	8986	23QV-2	H1		TBT	O11
	23QV-2	H2	O2	O2 BLK	8987	23QV-2	H2		TBT	O12

NOTES FOR CABLE C672A

NUMBER	NOTES
1	ADD A 3 TO 4 INCH WHITE SLEEVE, PER NEC CODE, TO INDICATE AC NEUTRAL ON CONDUCTOR O2.

CABLE: C678 CONNECTIONS: 101 TURBINE CONTROL PANEL
257 JB037 PERFORMANCE MONITORING LOW LEVEL

FROM LOCATION 101			CABLE		DEVICE			TO LOCATION 456		
INT LOC	TERM BD	TERM	PIN	COND	WIRE #	DEVICE	DESC	INT LOC	TERM BD	TERM
‹R›	SHD	COM		O1SHD	E2330	96CS-1	SHD		TBA	O21
‹R›	TBQC	O50	O1	O1ORN	2331	96CS-1	SIG+		TBA	O22
‹R›	TBQC	O51	O2	O1BLK	2330	96CS-1	SIG-		TBA	O23
‹C›	SHD	COM		O2SHD	E2354	96BD-1	SHD		TBA	O16
‹C›	CTBA	O40	O3	O2ORN	2354	96BD-1	SIG+		TBA	O17
‹C›	CTBA	O41	O4	O2BLK	2355	96BD-1	SIG-		TBA	O18
‹R›	SHD	COM		O3SHD	E2378	96EP-1	SHD		TBA	O26
‹R›	TBQC	O53	O5	O3ORN	2378	96EP-1	SIG+		TBA	O27
‹R›	TBQC	O54	O6	O3BLK	2379	96EP-1	SIG-		TBA	O28
‹R›	SHD	COM		O4SHD	E2350	96AP-1A	SHD		TBA	OO1
‹R›	TBQB	O35	O7	O4ORN	2350	96AP-1A	SIG+		TBA	OO2
‹R›	TBQB	O37	O8	O4BLK	2351	96AP-1A	SIG-		TBA	OO3
‹R›	SHD	COM		O5SHD	E7059	96AP-1B	SHD		TBA	OO6
‹R›	TBQB	O39	O9	O5ORN	7059	96AP- 1B	SIG+		TBA	OO7
‹R›	TBQB	O41	10	O5BLK	7060	96AP-1B	SIG-		TBA	OO8
‹R›	SHD	COM		O6SHD	E7061	96AP-1C	SHD		TBA	O11
‹R›	TBQB	O43	11	O6ORN	7061	96AP-1C	SIG+		TBA	O12
‹R›	TBQB	O45	12	O6BLK	7062	96AP-1C	SIG-		TBA	O13
				O7SHD			SHD			
			13	O7ORN	SP					
			14	O7BLK	SP					
				O8SHD			SHD			
			15	O8ORN	SP					
			16	O8BLK	SP					
				O9SHD			SHD			
			17	O9ORN	SP					
			18	O9BLK	SP					

CABLE: C725 CONNECTIONS: 339 JB298 PEECC LEVEL 3
455 JB297 AIR PROCESS SKID LEVEL 3

FROM LOCATION 339			CABLE		DEVICE			TO LOCATION 455		
INT LOC	TERM BD	TERM	PIN	COND	WIRE #	DEVICE	DESC	INT LOC	TERM BD	TERM
	TBP	OO5	O1	O1 BLK	553	CONT PWR	L		TBC	OO1
	TBP	OO6	O2	O2 BLK	2503-13	CONT PWR	N		TBC	OO3
			O3	O3 BLK	SP					

NOTES FOR CABLE C725

NUMBER NOTES

1 ADD A 3 TO 4 INCH WHITE SLEEVE, PER NEC CODE, TO INDICATE AC NEUTRAL ON CONDUCTOR O2.

CABLE: C727 CONNECTIONS: 101 TURBINE CONTROL PANEL
455 JB297 AIR PROCESS SKID LEVEL 3

FROM LOCATION 101			CABLE		DEVICE			TO LOCATION 455		
INT LOC	TERM BD	TERM	PIN	COND	WIRE #	DEVICE	DESC	INT LOC	TERM BD	TERM
‹CD›	DTBA	O50	O1	O1 BLK	107	27AD-2	C		TBA	O17
‹CD›	DTBA	O49	O2	O2 BLK	6611	63AD-4	NC		TBA	OO9
			O3	O3 BLK	9158	27AD-1	NO		TBA	O11
			O4	O4 BLK	6681	27AD-2	NO		TBA	OO7
			O5	O5 BLK	SP					
			O6	O6 BLK	SP					

NOTES FOR CABLE C727

NUMBER NOTES

1 ADD A 3 TO 4 INCH WHITE SLEEVE, PER NEC CODE, TO INDICATE AC NEUTRAL ON CONDUCTOR O2.

CABLE: C743 CONNECTIONS: 102 GENERATOR CONTROL PANEL
201 LIMIT AMP

FROM LOCATION 102			CABLE		DEVICE			TO LOCATION 201		
INT LOC	TERM BD	TERM	PIN	COND	WIRE #	DEVICE	DESC	INT LOC	TERM BD	TERM
	TBGG	OO1	O1	O1 BLK	760	59CM	P		TB06	O12
	TBGG	OO2	O2	O2 BLK	759	59CM	N		TB06	O13

CABLE: C745A CONNECTIONS: 146 METALCLAD SWITCHGEAR
329 CRANKING MOTOR TRANSFORMER

FROM LOCATION 146			CABLE		DEVICE			TO LOCATION 329		
INT LOC	TERM BD	TERM	PIN	COND	WIRE #	DEVICE	DESC	INT LOC	TERM BD	TERM
	DISC LINK	L1	O1	O1 BLK	L1	3PH SUPPLY	T1		POWER FEED	A
	DISC LINK	L2	O2	O2 BLK	L2	3PH SUPPLY	T2		POWER FEED	B
	DISC LINK	L3	O3	O3 BLK	L3	3PH SUPPLY	T3		POWER FEED	C

CABLE: C745B CONNECTIONS: 183 AUXILIARY POWER TRANSFORMER
329 CRANKING MOTOR TRANSFORMER

FROM LOCATION 183			CABLE		DEVICE			TO LOCATION 329		
INT LOC	TERM BD	TERM	PIN	COND	WIRE #	DEVICE	DESC	INT LOC	TERM BD	TERM
	AC FDR	A	O1	O1 BLK	L1	3PH SUPPLY	T1		SUPPLY PWR	A
	AC FDR	B	O2	O2 BLK	L2	3PH SUPPLY	T2		SUPPLY PWR	B
	AC FDR	C	O3	O3 BLK	L3	3PH SUPPLY	T3		SUPPLY PWR	C

CABLE: C776 CONNECTIONS: 136 JBOO5B GENERATOR COMPARTMENT LEVEL 3
151 JB215 GENERATOR FILTER SEQUENCER

FROM LOCATION 136			CABLE		DEVICE			TO LOCATION 151		
INT LOC	TERM BD	TERM	PIN	COND	WIRE #	DEVICE	DESC	INT LOC	TERM BD	TERM
	TBB	O32	O1	O1 BLK	107	P125VDC	COM		TBA	OO2
	TBB	O33	O2	O2 BLK	655	63GF-1	NC		TBA	OO1
	TBB	O34	O3	O3 BLK	1646	63CA-3/27GF-1	NO		TBA	OO5
	TBC	OO7	O4	O4 BLK	542A	LITE RECPT	L		TBB	OO1
	TBC	OO8	O5	O5 BLK	2503 2A	LITE RECPT	N		TBB	OO2

NOTES FOR CABLE C776

NUMBER NOTES

1 ADD A 3 TO 4 INCH WHITE SLEEVE, PER NEC CODE, TO INDICATE AC NEUTRAL ON CONDUCTOR O5.

2 ADD THE FOLLOWING JUMPERS IN (151) JB215 GENERATOR FILTER SEQUENCER:
TBB-(001) TO TBB-(003) TBB-(002) TO TBB-(004)

CABLE: C777 CONNECTIONS: 136 JB005B GENERATOR COMPARTMENT LEVEL 3
151 JB215 GENERATOR FILTER SEQUENCER

FROM LOCATION 136			CABLE		DEVICE			TO LOCATION 151		
INT LOC	TERM BD	TERM	PIN	COND	WIRE #	DEVICE	DESC	INT LOC	TERM BD	TERM
	TBB	O35	O1	O1 BLK	545	34GF-1	L		TBB	OO7
	TBB	O36	O2	O2 BLK	2503-5	34GF-1	N		TBB	OO8

NOTES FOR CABLE C777

NUMBER NOTES

1 ADD A 3 TO 4 INCH WHITE SLEEVE, PER NEC CODE, TO INDICATE AC NEUTRAL ON CONDUCTOR 02.

CABLE: C809 CONNECTIONS: 334 PEECC MOTOR CONTROL CENTER
441 JB131 GAS FUEL MODULE LEVEL 4

FROM LOCATION 334			CABLE		DEVICE			TO LOCATION 441		
INT LOC	TERM BD	TERM	PIN	COND	WIRE #	DEVICE	DESC	INT LOC	TERM BD	TERM
MCC2	VL2-TB	T1	O1	O1 BLK	T1-VL2	88VL 2	T1		TBA	OO4
MCC2	VL2-TB	T2	O2	O2 BLK	T2-VL2	88VL 2	T2		TBA	OO5
MCC2	VL2-TB	T3	O3	O3 BLK	T3-VL2	88VL 2	T3		TBA	OO6

CABLE: C809A CONNECTIONS: 339 JB298 PEECC LEVEL 3
441 JB131 GAS FUEL MODULE LEVEL 4

FROM LOCATION 339			CABLE		DEVICE			TO LOCATION 441		
INT LOC	TERM BD	TERM	PIN	COND	WIRE #	DEVICE	DESC	INT LOC	TERM BD	TERM
	TBP	O11	O1	O1 BLK	9509	23VL-2	H1		TBA	O11
	TBP	O12	O2	O2 BLK	9510	23VL-2	H2		TBA	O12

CABLE: C817 CONNECTIONS: 334 PEECC MOTOR CONTROL CENTER
441 JB131 GAS FUEL MODULE LEVEL 4

FROM LOCATION 334			CABLE		DEVICE			TO LOCATION 441		
INT LOC	TERM BD	TERM	PIN	COND	WIRE #	DEVICE	DESC	INT LOC	TERM BD	TERM
MCC1	VL1 TB	T1	O1	O1 BLK	T1 VL1	88VL-1	T1		TBA	OO1
MCC1	VL1 TB	T2	O2	O2 BLK	T2 VL1	88VL-1	T2		TBA	OO2
MCC1	VL1 TB	T3	O3	O3 BLK	T3 VL1	88VL-1	T3		TBA	OO3

CABLE: C817A CONNECTIONS: 339 JB298 PEECC LEVEL 3
441 JB131 GAS FUEL MODULE LEVEL 4

FROM LOCATION 339			CABLE		DEVICE			TO LOCATION 441		
INT LOC	TERM BD	TERM	PIN	COND	WIRE #	DEVICE	DESC	INT LOC	TERM BD	TERM
	TBP	OO9	O1	O1 BLK	9519	23VL-1	H1		TBA	OO9
	TBP	O1O	O2	O2 BLK	9520	23VL-1	H2		TBA	O10

CABLE: C819 CONNECTIONS: 101 TURBINE CONTROL PANEL
563 JB386 GAS SCRUBBER LEVEL 3

FROM LOCATION 101			CABLE		DEVICE			TO LOCATION 563		
INT LOC	TERM BD	TERM	PIN	COND	WIRE #	DEVICE	DESC	INT LOC	TERM BD	TERM
‹QD1›	DTBA	O82	O1	O1 BLK	107	71GS-2B	C		TBB	OO3
‹QD1›	DTBA	O81	O2	O2 BLK	9126	71GS-2B	NO		TBB	OO1
‹QD1›	DTBA	O8O	O3	O3 BLK	107	71GS-2A	C		TBA	OO6
‹QD1›	DTBA	O79	O4	O4 BLK	2170	71GS-2A	NO		TBA	OO4
‹QD1›	DTBA	O40	O5	O5 BLK	107	71GS-1	C		TBA	OO3
‹QD1›	DTBA	O39	O6	O6 BLK	2699	71GS-2	NO		TBA	OO1
‹QD1›	DTBB	OO8	O7	O7 BLK	107	71GS-2C	C		TBB	OO6
‹QD1›	DTBB	OO7	O8	O8 BLK	6893	71GS-2C	NO		TBB	OO4
			O9	O9 BLK	SP					
			10	10 BLK	SP					
			11	11 BLK	SP					
			12	12 BLK	SP					
			13	13 BLK	SP					
			14	14 BLK	SP					
			15	15 BLK	SP					
			16	16 BLK	SP					
			17	17 BLK	SP					
			18	18 BLK	SP					
			19	19 BLK	SP					

CABLE: C849 CONNECTIONS: 201 LIMIT AMP
339 JB298 PEECC LEVEL 3

FROM LOCATION 201			CABLE		DEVICE			TO LOCATION 339		
INT LOC	TERM BD	TERM	PIN	COND	WIRE #	DEVICE	DESC	INT LOC	TERM BD	TERM
	TB04	OO8	O1	O1 BLK	550	23LC	L		TBN	OO1
	TB04	OO9	O2	O2 BLK	2503 10	23LC	N		TBN	OO2
			O3	O3 BLK	SP					

NOTES FOR CABLE C849

NUMBER	NOTES
1	ADD A 3 TO 4 INCH WHITE SLEEVE, PER NEC CODE, TO INDICATE AC NEUTRAL ON CONDUCTOR 02.

CABLE: C870 CONNECTIONS: 101 TURBINE CONTROL PANEL
284 FIRE PROTECTION PANEL

FROM LOCATION 101			CABLE		DEVICE			TO LOCATION 284		
INT LOC	TERM BD	TERM	PIN	COND	WIRE #	DEVICE	DESC	INT LOC	TERM BD	TERM
‹QD1›	DTBB	O76	O1	O1 BLK	107	94F-1B			TBA	O31
‹QD1›	DTBB	O75	O2	O2 BLK	2655	94F-1B			TBA	O32
			O3	O3 BLK	SP					
			O4	O4 BLK	SP					
‹CD1›	DTBB	O46	O5	O5 BLK	107	30CC			TBA	O53
‹CD1›	DTBB	O45	O6	O6 BLK	2654	30CC			TBA	O56
‹QD1›	DTBB	O78	O7	O7 BLK	107	94F-2B			TBA	O35
‹QD1›	DTBB	O77	O8	O8 BLK	2604	94F-2B			TBA	O36
			O9	O9 BLK	SP					
			10	10 BLK	SP					
			11	11 BLK	SP					
			12	12 BLK	SP					

CABLE: C871 CONNECTIONS: 284 FIRE PROTECTION PANEL
339 JB298 PEECC LEVEL 3

FROM LOCATION 284			CABLE		DEVICE			TO LOCATION 339		
INT LOC	TERM BD	TERM	PIN	COND	WIRE #	DEVICE	DESC	INT LOC	TERM BD	TERM
	TBA	O98	O1	O1 BLK	547	120VAC	L		TBF	OO7
	TBA	O99	O2	O2 BLK	2503 7	120VAC	N		TBF	OO8
			O3	O3 BLK	SP					

NOTES FOR CABLE C871

NUMBER NOTES

1 ADD A 3 TO 4 INCH WHITE SLEEVE, PER NEC CODE, TO INDICATE AC NEUTRAL ON CONDUCTOR 02.

CABLE: C872 CONNECTIONS: 284 FIRE PROTECTION PANEL
339 JB298 PEECC LEVEL 3

FROM LOCATION 284			CABLE		DEVICE			TO LOCATION 339		
INT LOC	TERM BD	TERM	PIN	COND	WIRE #	DEVICE	DESC	INT LOC	TERM BD	TERM
	TBA	O34	O1	O1 BLK	3210	94F-1A	NO1		TBE	OO2
	TBA	O33	O2	O2 BLK	3211	94F-1A	NO2		TBE	OO8
	TBA	O38	O3	O3 BLK	3210	94F-2A	NO1		TBE	OO4
	TBA	O37	O4	O4 BLK	3211	94F-2A	NO2		TBE	O10
	TBA	O42	O5	O5 BLK	3210	94F-4A	NO1		TBE	OO6
	TBA	O41	O6	O6 BLK	3211	94F-4A	NO2		TBE	O12
	TBA	O44	O7	O7 BLK	3210	45CP-1A	NO1		TBE	OO1
	TBA	O43	O8	O8 BLK	3211	45FCP-1A	NO2		TBE	OO7
	TBA	O46	O9	O9 BLK	3210	45FCP-2A	NO1		TBE	OO3
	TBA	O45	10	10 BLK	3211	45CP-2A	NO2		TBE	OO9
	TBA	O48	11	11 BLK	3210	45CP-4A	NO1		TBE	OO5
	TBA	O47	12	12 BLK	3211	45CP-4A	NO2		TBE	O11

CABLE: C874 CONNECTIONS: 284 FIRE PROTECTION PANEL
339 JB298 PEECC LEVEL 3

FROM LOCATION 284			CABLE		DEVICE			TO LOCATION 339		
INT LOC	TERM BD	TERM	PIN	COND	WIRE #	DEVICE	DESC	INT LOC	TERM BD	TERM
	TERM	OO3	O1	O1 BLK	556	88RC-1	L1		AC BKR	12A
	TERM	OO4	O2	O2 BLK	558	88RC-1	L2		AC BKR	12B
	TERM	OO5	O3	O3 BLK	559	88RC-1	L3		AC BKR	12C

CABLE: S875 CONNECTIONS: 101 TURBINE CONTROL PANEL
115 JB002 ACCESSORY BASE LEVEL 3

FROM LOCATION 101			CABLE		DEVICE			TO LOCATION 115		
INT LOC	TERM BD	TERM	PIN	COND	WIRE #	DEVICE	DESC	INT LOC	TERM BD	TERM
<QD2>	DTBC	002	01	O1 BLK	241	20AA-1	01		TBH	007
<QD2>	DTBC	006	02	O2 BLK	217	20AB-1	01		TBH	008
			03	O3 BLK	SP					
			04	O4 BLK	SP					
<QD2>	DTBB	023	05	O5 BLK	107	63LF-1	C		TBC	008
<QD2>	DTBB	024	06	O6 BLK	684	63LF-1	NC		TBG	005
			07	O7 BLK	SP					
			08	O8 BLK	SP					
<QD2>	DTBA	039	09	O9 BLK	5620	33FK-1	NO		TBG	009
<QD2>	DTBA	073	10	10 BLK	5619	33FK-2	NO		TBG	010
<QD2>	DTBA	019	11	11 BLK	166	33FL-1	NO2		TBG	011
<QD2>	DTBA	017	12	12 BLK	169	33FL-2	NO2		TBG	012
<QD2>	DTBA	018	13	13 BLK	107	P125VDC	COM		TBC	001
<QD2>	DTBA	067	14	14 BLK	9295	63LF-8	NC		TBG	013
<QD2>	DTBB	005	15	15 BLK	1220	63LF-9	NC		TBG	014
<QD2>	DTBC	049	16	16 BLK	5627	20FK-1	01		TBG	015
<QD2>	DTBC	050	17	17 BLK	108	20FK-1	02		TBG	010
<P>	PTBA	63	18	18 BLK	232	20FL-1	01		TBG	016
<P>	PTBA	64	19	19 BLK	233	20FL-1	02		TBG	017

CABLE: S876 CONNECTIONS: 101 TURBINE CONTROL PANEL
114 JB001 ACCESSORY BASE LOW LEVEL

FROM LOCATION 101			CABLE		DEVICE			TO LOCATION 114		
INT LOC	TERM BD	TERM	PIN	COND	WIRE #	DEVICE	DESC	INT LOC	TERM BD	TERM
				01 SHD			SHD			
			01	01 ORN	SP					
			02	01 BLK	SP					
				02 SHD			SHD			
			03	02 ORN	SP					
			04	02 BLK	SP					
				03 SHD			SHD			
			05	03 ORN	SP					
			06	03 BLK	SP					
<R>	QTBA	SHD		04 SHD	E308	77FD-1	SHD		TBC	003
<R>	QTBA	55	07	04 ORN	309	77FD-1	SIG+		TBC	002
<R>	QTBA	56	08	04 BLK	308	77FD-1	SIG-		TBC	001
<S>	QTBA	SHD		05 SHD	E310	77FD-2	SHD		TBC	006
<S>	QTBA	55	09	05 ORN	311	77FD-2	SIG+		TBC	005
<S>	QTBA	56	10	05 BLK	310	77FD-2	SIG-		TBC	004
<T>	QTBA	SHD		06 SHD	E1368	77FD-3	SHD		TBC	009
<T>	QTBA	55	11	06 ORN	1369	77FD-3	SIG+		TBC	008
<T>	QTBA	56	12	06 BLK	1368	77FD-3	SIG-		TBC	007
<R>	QTBA	SHD		07 SHD	E362	65FP-1	SHD		TBC	012
<R>	QTBA	035	13	07 ORN	363	65FP-1	YEL		TBC	010
<R>	QTBA	033	14	07 BLK	362	65FP-1	GRN		TBC	011
<S>	QTBA	SHD		08 SHD	E364	65FP-1	SHD		TBC	015
<S>	QTBA	035	15	08 ORN	365	65FP-1	RED		TBC	013
<S>	QTBA	033	16	08 BLK	364	65FP-1	WHT		TBC	014
<T>	QTBA	SHD		09 SHD	E2388	65FP-1	SHD		TBC	018
<T>	QTBA	035	17	09 ORN	2389	65FP-1	ORN		TBC	016
<T>	QTBA	033	18	09 BLK	2388	65FP-1	BLU		TBC	017

CABLE: S877 CONNECTIONS: 101 TURBINE CONTROL PANEL
174 JB79 WATER INJECTION SKID LEVEL 1

FROM LOCATION 101			CABLE		DEVICE			TO LOCATION 174		
INT LOC	TERM BD	TERM	PIN	COND	WIRE #	DEVICE	DESC	INT LOC	TERM BD	TERM
<R>	TBQC	SHD		01 SHD	E6978	97WN-1	SHD		TBD	003
<R>	TBQC	081	01	01 ORN	6978	97WN-1	POS		TBD	002
<R>	TBQC	082	02	01 BLK	6979	97WN-1	NEG		TBD	001
<R>	TBQC	SHD		02 SHD	E6974	96WN-4	SHD		TBD	006
<R>	TBQC	056	03	02 ORN	6974	96WN-4	POS		TBD	005
<R>	TBQC	057	04	02 BLK	6975	96WN-4	NEG		TBD	004
<R>	TBQC	SHD		03 SHD	E6976	96WP-1	SHD		TBD	009
<R>	TBQC	059	05	03 ORN	6976	96WP-1	POS		TBD	008
<R>	TBQC	060	06	03 BLK	6977	96WP-1	NEG		TBD	007
<S>	TBQF	SHD		04 SHD	E3900	96WF-1	SHD		TBC	003
<S>	TBQF	035	07	04 ORN	3900	96WF-1	POS		TBC	002
<S>	TBQF	036	08	04 BLK	3901	96WF-1	NEG		TBC	001
<S>	TBQF	SHD		05 SHD	E3902	96WF-2	SHD		TBC	006
<S>	TBQF	039	09	05 ORN	3902	96WF-2	POS		TBC	005
<S>	TBQF	040	10	05 BLK	3903	96WF-2	NEG		TBC	004
<S>	TBQF	SHD		06 SHD	E3904	96WF-3	SHD		TBC	009
<S>	TBQF	041	11	06 ORN	3904	96WF-3	POS		TBC	008
<S>	TBQF	042	12	06 BLK	3905	96WF-3	NEG		TBC	007
				07 SHD	SP					
			13	07 ORN	SP					
			14	07 BLK	SP					
				08 SHD	SP					
			15	08 ORN	SP					
			16	08 BLK	SP					
				09 SHD	SP					
			17	09 ORN	SP					
			18	09 BLK	SP					

CABLE: S878 CONNECTIONS: 101 TURBINE CONTROL PANEL
236 TURBINE ROOF LOW LEVEL

FROM LOCATION 101			CABLE		DEVICE			TO LOCATION 236		
INT LOC	TERM BD	TERM	PIN	COND	WIRE #	DEVICE	DESC	INT LOC	TERM BD	TERM
<S>	TBQC	SHD		01 SHD	E2049	96PLP-1	SHD		TBA	012
<S>	TBQC	069	01	01 ORN	2049	96PLP-1	POS		TBA	010
<S>	TBQC	070	02	01 BLK	2050	96PLP-1	NEG		TBA	011
<S>	TBQC	SHD		02 SHD	E2051	96PLS-1	SHD		TBA	006
<S>	TBQC	071	03	02 ORN	2051	96PLS-1	POS		TBA	004
<S>	TBQC	072	04	02 BLK	2052	96PLS-1	NEG		TBA	005
<S>	TBQC	SHD		03 SHD	E2053	96PWP-1	SHD		TBA	009
<S>	TBQC	077	05	03 ORN	2053	96PWP-1	POS		TBA	007
<S>	TBQC	079	06	03 BLK	2054	96PWP-1	NEG		TBA	008
				04 SHD						
			07	04 ORN	SP					
			08	04 BLK	SP					
				05 SHD						
			09	05 ORN	SP					
			10	05 BLK	SP					
				06 SHD						
			11	06 ORN	SP					
			12	06 BLK	SP					

CABLE: S879 CONNECTIONS: 101 TURBINE CONTROL PANEL
173 JB72 WATER INJECTION SKID LEVEL 3

FROM LOCATION 101			CABLE		DEVICE			TO LOCATION 173		
INT LOC	TERM BD	TERM	PIN	COND	WIRE #	DEVICE	DESC	INT LOC	TERM BD	TERM
<QD2>	DTBA	002	01	01 BLK	107	P125VDC	COM		TBA	016
<QD2>	DTBA	001	02	02 BLK	2685	52WN-1	NO		TBB	010
<QD2>	DTBC	082	03	03 BLK	214	20WN-1	0 1		TBB	019
<QD2>	DTBC	083	04	04 BLK	2124	20WN-1	FU-04		TBB	020
<QD2>	DTBC	014	05	05 BLK	7599	4WN-1X	0 1		TBB	021
<QD2>	DTBC	015	06	06 BLK	7598	4WN-1X	FU-05		TBB	022
<QD2>	DTBA	037	07	07 BLK	2137	63WN-1	NO		TBB	001
<QD2>	DTBB	029	08	08 BLK	1694	63WN-3	NC		TBB	003
<QD2>	DTBB	027	09	09 BLK	1600	26JS-2	NC		TBB	004
<QD2>	DTBA	055	10	10 BLK	9109	30WN-1	NC		TBB	006
<QD2>	DTBA	035	11	11 BLK	9110	84WN-1	NO		TBB	008
			12	12 BLK	SP					
			13	13 BLK	SP					
			14	14 BLK	SP					
			15	15 BLK	SP					
			16	16 BLK	SP					
			17	17 BLK	SP					
			18	18 BLK	SP					
			19	19 BLK	SP					

CABLE: C880 CONNECTS: 101 TURBINE CONTROL PANEL
942 CUSTOMER SUPPLIED MCC

FROM LOCATION 101			CABLE		DEVICE			TO LOCATION 942		
INT LOC	TERM BD	TERM	PIN	COND	WIRE #	DEVICE	DESC	INT LOC	TERM BD	TERM
<QD2>	DTBB	003	0 1	0 1 BLK	2040	L52FD1		MCC-203A	TBD	TBD
<QD2>	DTBB	004	0 2	0 2 BLK	107	L52FD1		MCC-203A	TBD	TBD
<QD2>	DTBB	007	0 3	0 3 BLK	2041	L52FD2		MCC-203B	TBD	TBD
<QD2>	DTBB	008	0 4	0 4 BLK	107	L52FD2		MCC-203B	TBD	TBD
<QD2>	DTBC	073	0 5	0 5 BLK	2042	L4FD1		MCC-203A	TBD	TBD
<QD2>	DTBC	074	0 6	0 6 BLK	2043	L4FD1		MCC-203A	TBD	TBD
<QD2>	DTBC	076	0 7	0 7 BLK	2044	L4FD2		MCC-203B	TBD	TBD
<QD2>	DTBC	077	0 8	0 8 BLK	2045	L4FD2		MCC-203B	TBD	TBD
<QD2>	DTBA	011	0 9	0 9 BLK	2046	49FD1		MCC-203A	TBD	TBD
<QD2>	DTBA	012	1 0	1 0 BLK	107	49FD1		MCC-203A	TBD	TBD
<QD2>	DTBA	013	1 1	1 1 BLK	2047	49FD2		MCC-203B	TBD	TBD
<QD2>	DTBA	014	1 2	1 2 BLK	107	49FD2		MCC-203B	TBD	TBD
			1 3	1 3 BLK						
			1 4	1 4 BLK						
			1 5	1 5 BLK						
			1 6	1 6 BLK						
			1 7	1 7 BLK						
			1 8	1 8 BLK						
			1 9	1 9 BLK						

CABLE: S881 CONNECTS: 101 TURBINE CONTROL PANEL
429 88AB-1 MCC CUBICLE

FROM LOCATION 101			CABLE		DEVICE			TO LOCATION 429		
INT LOC	TERM BD	TERM	PIN	COND	WIRE #	DEVICE	DESC	INT LOC	TERM BD	TERM
<QD2>	DTBA	048	0 1	0 1 BLK	2030	52AB-1	NO		TBA	001
<QD2>	DTBA	049	0 2	0 2 BLK	2031	52AB-1	COM		TBA	002
<QD2>	DTBA	065	0 3	0 3 BLK	2032	49AB-1	NO		TBA	003
<QD2>	DTBA	066	0 4	0 4 BLK	2033	49AB-1	COM		TBA	004
<QD2>	DTBC	010	0 5	0 5 BLK	2034	4AB-1	2		TBA	005
<QD2>	DTBC	011	0 6	0 6 BLK	2035	4AB-1	1		TBA	006
			0 7	0 7 BLK						
			0 8	0 8 BLK						

CABLE: S882 CONNECTS: 101 TURBINE CONTROL PANEL
231 JB019B TURBINE OFF BASE RACK LEVEL-3

FROM LOCATION 101			CABLE		DEVICE			TO LOCATION 235		
INT LOC	TERM BD	TERM	PIN	COND	WIRE #	DEVICE	DESC	INT LOC	TERM BD	TERM
			0 1	0 1 BLK						
<QD2>	DTBC	046	0 2	0 2 BLK	219	20PL-1	0 1		TBC	011
<QD2>	DTBC	029	0 3	0 3 BLK	7749	20BP-1	0 1		TBC	010
<QD2>	DTBC	030	0 4	0 4 BLK	108	20BP-1	0 2		TBD	010
<QD2>	DTBC	058	0 5	0 5 BLK	7247	20PW-1	0 1		TBB	009
<QD2>	DTBC	057	0 6	0 6 BLK	108	20PW-1	0 2		TBD	019
<QD2>	DTBC	062	0 7	0 7 BLK	221	20PL-2	0 1		TBC	008
<QD2>	DTBC	061	0 8	0 8 BLK	108	20PL-2	0 2		TBD	012
<QD2>	DTBC	054	0 9	0 9 BLK	7144	20PL-3	0 1		TBB	010
<QD2>	DTBC	053	1 0	1 0 BLK	108	20PL-3	0 2		TBD	017
<QD2>	DTBC	025	1 1	1 1 BLK	7262	20PL-4	0 1		TBB	011
<QD2>	DTBC	026	1 2	1 2 BLK	108	20PL-4	0 2		TBD	017
<QD2>	DTBA	041	1 3	1 3 BLK	107	33PL-1	C		TBD	001
<QD2>	DTBA	040	1 4	1 4 BLK	5645	33PL-1	NO		TBC	005
<QD2>	DTBA	043	1 5	1 5 BLK	107	33PL-2	C		TBD	002
<QD2>	DTBA	042	1 6	1 6 BLK	5159	33PL-2	NO		TBC	006
<QD2>	DTBA	045	1 7	1 7 BLK	107	33PW-1	C		TBD	009
<QD2>	DTBA	044	1 8	1 8 BLK	5160	33PW-1	NO		TBC	012
			1 9	1 9 BLK						

CABLE: C883 CONNECTS: 101 TURBINE CONTROL PANEL
942 CUSTOMER SUPPLIED MCC

FROM LOCATION 101			CABLE		DEVICE			TO LOCATION 942		
INT LOC	TERM BD	TERM	PIN	COND	WIRE #	DEVICE	DESC	INT LOC	TERM BD	TERM
<QD2>	DTBC	079	0 1	0 1 BLK	2011	L4DW-1	C	MCC-400A	TBD	TBD
<QD2>	DTBC	080	0 2	0 2 BLK	2012	L4DW-1	NO	MCC-400A	TBD	TBD
<QD2>	DTBC	085	0 3	0 3 BLK	2013	L4DW-2	C	MCC-400B	TBD	TBD
<QD2>	DTBC	086	0 4	0 4 BLK	2014	L4DW-2	NO	MCC-400B	TBD	TBD
<QD2>	DTBB	009	0 5	0 5 BLK	2018	52DW-1	C	MCC-400A	TBD	TBD
<QD2>	DTBB	010	0 6	0 6 BLK	2019	52DW-1	NO	MCC-400A	TBD	TBD
<QD2>	DTBB	011	0 7	0 7 BLK	2020	52DW-2	C	MCC-400B	TBD	TBD
<QD2>	DTBB	012	0 8	0 8 BLK	2021	52DW-2	NO	MCC-400B	TBD	TBD
<QD2>	DTBB	017	0 9	0 9 BLK	2026	49DW-1	C	MCC-400A	TBD	TBD
<QD2>	DTBB	018	1 0	1 0 BLK	2027	49DW-1	NC	MCC-400A	TBD	TBD
<QD2>	DTBB	019	1 1	1 1 BLK	2028	49DW-2	C	MCC-400B	TBD	TBD
<QD2>	DTBB	020	1 2	1 2 BLK	2029	49DW-2	NC	MCC-400B	TBD	TBD
			1 3	1 3 BLK						
			1 4	1 4 BLK						
			1 5	1 5 BLK						
			1 6	1 6 BLK						
			1 7	1 7 BLK						
			1 8	1 8 BLK						
			1 9	1 9 BLK						

CABLE: S884 CONNECTS: 429 88AB-1 MCC CUBICLE
392 JB004 ACCESSORY BASE LEVEL 4

FROM LOCATION 429			CABLE		DEVICE			TO LOCATION 392		
INT LOC	TERM BD	TERM	PIN	COND	WIRE #	DEVICE	DESC	INT LOC	TERM BD	TERM
	AB1-TB	T1	0 1	0 1 BLK	T1-AB-1	88AB-1	T1		TBVV	001
	AB1-TB	T2	0 2	0 2 BLK	T2-AB-1	88AB-1	T2		TBVV	002
	AB1-TB	T3	0 3	0 3 BLK	T3-AB-1	88AB-1	T3		TBVV	003

CABLE: C885 CONNECTS: 942 CUSTOMER SUPPLIED MCC
175 WATER INJECTION SKID 480 VOLT SUPPLY

FROM LOCATION 942			CABLE		DEVICE			TO LOCATION 175		
INT LOC	TERM BD	TERM	PIN	COND	WIRE #	DEVICE	DESC	INT LOC	TERM BD	TERM
	T1	1	O1	O1 BLK	L1	3PH SUPPLY	L1		SUPPLY PWR	A
	T2	2	O2	O2 BLK	L2	3PH SUPPLY	L2		SUPPLY PWR	B
	T3	2	O2	O3 BLK	L3	3PH SUPPLY	L3		SUPPLY PWR	C

CABLE: S886 CONNECTS: 429 88AB-1 MCC CUBICLE
115 JB002 ACCESSORY BASE LEVEL-3

FROM LOCATION 429			CABLE		DEVICE			TO LOCATION 115		
INT LOC	TERM BD	TERM	PIN	COND	WIRE #	DEVICE	DESC	INT LOC	TERM BD	TERM
	TBB	1	0 1	0 1 BLK	8900	23AB-1	T1		TBE	003
	TBB	2	0 2	0 2 BLK	8901	23AB-1	T2		TBE	004

CABLE: C887 CONNECTS: 942 CUSTOMER SUPPLIED MCC
941 LIQUID FUEL FORWARDING LF-JB-2

FROM LOCATION 942			CABLE		DEVICE			TO LOCATION 941		
INT LOC	TERM BD	TERM	PIN	COND	WIRE #	DEVICE	DESC	INT LOC	TERM BD	TERM
MCC-1004A	T1	1	0 1	0 1 BLK	T1	P-1004A	T1		TBA	001
MCC-1004A	T2	2	0 2	0 2 BLK	T2	P-1004A	T2		TBA	002
MCC-1004A	T3	2	0 2	0 3 BLK	T3	P-1004A	T2		TBA	003

CABLE: C888 CONNECTS: 942 CUSTOMER SUPPLIED MCC
941 LIQUID FUEL FORWARDING LF-JB-2

FROM LOCATION 942			CABLE		DEVICE			TO LOCATION 941		
INT LOC	TERM BD	TERM	PIN	COND	WIRE #	DEVICE	DESC	INT LOC	TERM BD	TERM
MCC-1004S	T1	1	0 1	0 1 BLK	T1	P-1004S	T1		TBA	005
MCC-1004S	T2	2	0 2	0 2 BLK	T2	P-1004S	T2		TBA	006
MCC-1004S	T3	2	0 2	0 3 BLK	T3	P-1004S	T2		TBA	007

CABLE: C889 CONNECTS: 942 CUSTOMER SUPPLIED MCC
940 DEMIN WATER FORWARDING PF-JB-2

FROM LOCATION 942			CABLE		DEVICE			TO LOCATION 940		
INT LOC	TERM BD	TERM	PIN	COND	WIRE #	DEVICE	DESC	INT LOC	TERM BD	TERM
MCC-400A	T1	1	0 1	0 1 BLK	T1	P-0403A	T1		TBA	001
MCC-400A	T2	2	0 2	0 2 BLK	T2	P-0403A	T2		TBA	002
MCC-400A	T3	2	0 2	0 3 BLK	T3	P-0403A	T2		TBA	003

CABLE: C890 CONNECTS: 942 CUSTOMER SUPPLIED MCC
940 DEMIN WATER FORWARDING PF-JB-2

FROM LOCATION 942			CABLE		DEVICE			TO LOCATION 940		
INT LOC	TERM BD	TERM	PIN	COND	WIRE #	DEVICE	DESC	INT LOC	TERM BD	TERM
MCC-400B	T1	1	0 1	0 1 BLK	T1	P-0403S	T1		TBA	004
MCC-400B	T2	2	0 2	0 2 BLK	T2	P-0403S	T2		TBA	005
MCC-400B	T3	2	0 2	0 3 BLK	T3	P-0403S	T2		TBA	006

CABLE: S891 CONNECTS: 101 TURBINE CONTROL PANEL
430 DEMIN WATER FORWARDING PF-JB-1

FROM LOCATION 101			CABLE		DEVICE			TO LOCATION 430		
INT LOC	TERM BD	TERM	PIN	COND	WIRE #	DEVICE	DESC	INT LOC	TERM BD	TERM
<QD2>	DTBB	013	0 1	0 1 BLK	2022	PSL-0403	C		TBB	004
<QD2>	DTBB	014	0 2	0 2 BLK	2023	PSL-0403	NO		TBB	005
			0 3	0 3 BLK	SP					
			0 4	0 4 BLK	SP					

CABLE: S892 CONNECTIONS: 101 TURBINE CONTROL PANEL
430 DEMIN WATER FORWARDING PF-JB-1

FROM LOCATION 101			CABLE		DEVICE			TO LOCATION 430		
INT LOC	TERM BD	TERM	PIN	COND	WIRE #	DEVICE	DESC	INT LOC	TERM BD	TERM
<S>	TBQC	SHD		01 SHD	E2922	PT-0403	SHD		TBA	010
<S>	TBQC	045	01	01 ORN	2922	PT-0403	POS		TBA	002
<S>	TBQC	046	02	01 BLK	2923	PT-0403	NEG		TBA	001

CABLE: S893 CONNECTS: 101 TURBINE CONTROL PANEL
427 LIQUID FUEL FORWARDING SKID LF-JB-1

FROM LOCATION 101			CABLE		DEVICE			TO LOCATION 427		
INT LOC	TERM BD	TERM	PIN	COND	WIRE #	DEVICE	DESC	INT LOC	TERM BD	TERM
<QD2>	DTBA	005	0 1	0 1 BLK	2036	PSL-1004	C		TBB	004
<QD2>	DTBA	006	0 2	0 2 BLK	107	PSL-1004	NO		TBB	005

CABLE: S894 CONNECTIONS: 101 TURBINE CONTROL PANEL
427 LIQUID FUEL FORWARDING SKID JB01

FROM LOCATION 101			CABLE		DEVICE			TO LOCATION 427		
INT LOC	TERM BD	TERM	PIN	COND	WIRE #	DEVICE	DESC	INT LOC	TERM BD	TERM
<S>	TBQC	SHD		01 SHD	E2924	PT-1004	SHD		TBA	010
<S>	TBQC	047	01	01 ORN	2924	PT-1004	POS		TBA	002
<S>	TBQC	048	02	01 BLK	2925	PT-1004	NEG		TBA	001

A | N° PLANO: AGM-02-0204-PLA-E-0076

NOTES:

1. FOR WIRE INTERCONNECTION REFER TO AGM-02-0204-PLA-E-0058 (INTERCONNECTION WIRING DIAGRAM) & AGM-02-0204-PLA-E-0006 (CABLE SUMMARY).
2. FOR INSTRUMENT LOCATIONS REFER TO AGM-02-0204-PLA-M-0075 (FUEL MANAGEMENT MECHANICAL ARRANGEMENT).
3. FOR INSTRUMENT SET POINTS REFER TO AGM-02-0204-PLA-I-0046 (DEVICE SUMMARY).

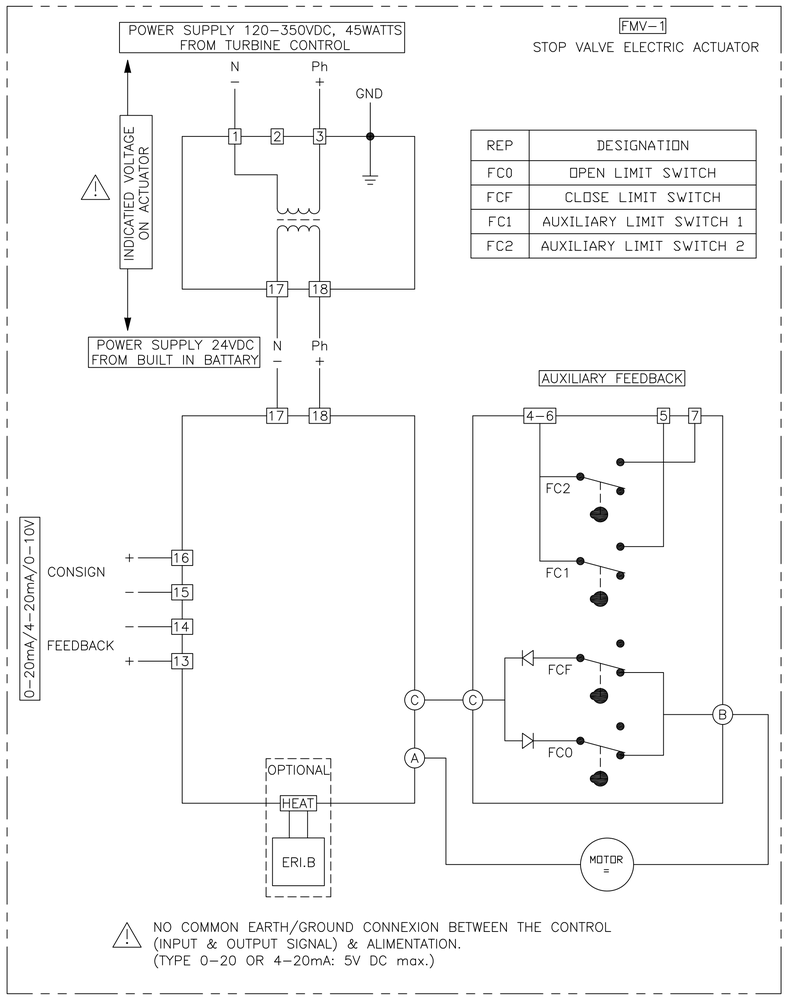

REP	DESIGNATION
FCO	OPEN LIMIT SWITCH
FCF	CLOSE LIMIT SWITCH
FC1	AUXILIARY LIMIT SWITCH 1
FC2	AUXILIARY LIMIT SWITCH 2

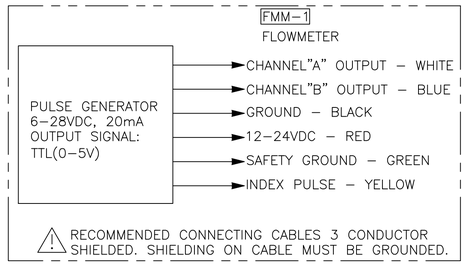

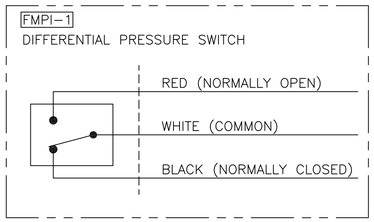

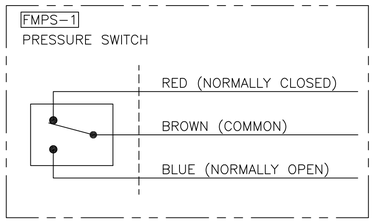

N° DE DOCUMENTO	DESCRIPCIÓN	REV.	FECHA
AGM–02–0204–PLA–I–0046	DEVICE SUMMARY		
AGM–02–0204–PLA–I–0006	CABLE SUMMARY		
AGN–02–0204–PLA–E–0058	INTERCONNECTION WIRING DIAGRAM		
AGM–02–0204–PLA–M–0075	FUEL MANAGEMENT MECHANICAL ARRANGEMENT		

DOCUMENTOS DE REFERENCIA

REV.	FECHA	REVISIONES O MODIFICACIONES	DIBUJO	REVISO	APROBO
A	07/07/11	ISSUED FOR REVIEW	SAB	CB	TK

REF. FABRICANTE	FABRICANTE	O/C:
REF. FABRICANTE		

DERWICK ASSOCIATES CORP. | ProEnergy SERVICES | CORPOELEC CORPORACIÓN ELÉCTRICA NACIONAL | La Electricidad de Caracas | GERENCIA FUNCIONAL DE INGENIERÍA Y PROYECTOS | SENECA

AMPLIACIÓN DE LA CAPACIDAD DE GENERACIÓN Y TRANSPORTE DE ELECTRICIDAD EN LA ISLA DE MARGARITA

FUEL MANAGEMENT
DUAL FUEL MOD. UNITS 298034 & 298035
(ELECTRICAL SCHEMATIC)

PLANO N°:	REV:		
PROYECTO N°: 409–2956–1			
CALCULO:	PROYECTO:	ESCALA: NONE	PLANO No: AGM–02–0204–PLA–E–0076
REVISADO: C. Brown	CALCULO:	FECHA: 07/07/11	
DIBUJO: S. Boerckel	REVISADO: J. Castillo	DISK. N°	
APROBADO: T. Koontz	DIBUJO:	ESC./PLOTEO:	
ARCHIVO:	APROBADO: M. Monticelli	ARCHIVO:	PAGINA: 1 DE: 6 — REV. A

F_A1_11 – 841x594mm

INTERCONNECTION POINTS

AGM-02-0204-PLA-G-0061

409-2956-DFMIP

CORPOELEC EMPRESA ELÉCTRICA SOCIALISTA	**AMPLIACIÓN DE LA CAPACIDAD DE GENERACIÓN Y TRANSPORTE DE ELECTRICIDAD EN LA ISLA DE MARGARITA (AGM)**	DERWICK DERWICK ASSOCIATES CORP.

SERVICIO DE ADECUACIÓN A SISTEMA DUAL DE DOS (2) UNIDADES, MARCA GENERAL ELECTRIC, MODELO 7001EA QUE SERÁN INSTALADAS EN LA PLANTA JUAN BAUTISTA ARISMENDI

Rev.	Fecha	Breve Descripción del Cambio	Total Pág.	Elab. por DERWICK	Rev. por DERWICK	Aprob. Por CORPOELEC
B	07/07/2011	ADDED REFERENCE TO ONE LINE DIAGRAM AGM-02-0204-PLA-E-0008	11	DOMINGO GUZMÁN	IKER CANDINA	JESÚS MANUEL TIRADO
A	23/06/2011	EMISIÓN PARA COMENTARIOS DE CORPOELEC	11	DOMINGO GUZMÁN	IKER CANDINA	JESÚS MANUEL TIRADO

TABLE OF CONTENTS

NO TABLE OF CONTENTS ENTRIES FOUND.

1. PURPOSE

The purpose of this document is to identify interconnection points for interfacing of the Dual Fuel Modification Package. This document also includes interconnections with the turbine control system. However a specific termination schedule for the turbine control system will be provided separately with the control system upgrade.

2. SCOPE

This document identifies the drawings for the mechanical, electrical, instrumentation, and controls interconnection points to accomplish the Dual Fuel Modifications Package

3. LOCATION

La Planta de Generación Juan Bautista Arismendi estará ubicada en la zona de El Guamache, municipio Tubores (ver Figura 1 y Figura 2), al lado oeste de la planta de Distribución de combustible El Guamache de PDVSA.

Figura 1. Ubicación de la Nueva Planta de Generación Juan Bautista Arismendi

Fig. 2. Parcela de Ubicación de Nueva Planta de Generación Juan Bautista Arismendi

3.1. ÁREA Y UBICACIÓN

La parcela ocupará un área aproximada de 50 hectáreas, la cual forma un polígono de cuatro (04) lados, definidos por los siguientes puntos de coordenadas UTM - REGVEN:

Vértices de Linderos		
Punto	**Norte**	**Este**
220A	1.203.129,416	386.707,723
220B	1.203.060,674	387.201,966
221A	1.202.267,719	387.261,708
221B	1.202.232,067	386.775,330

Elevación Sobre El Nivel Del Mar (m.s.n.m.): 5 m.

4. REFERENCES

The drawings and documents used as references to develop and support the technical content of this document are:

AGM-02-0204-ESP-P-0004	Design Basis
AGM-02-0204-MED-G-0002	Functional Description
AGM-02-0204-PLA-G-0057	Plot Plan
AGM-02-0204-PLA-P-0009	Process Flow Diagram
AGM-02-0204-FOP-P-0002	POF Description System Ops.
AGM-02-0204-PLA-G-0060	Flow and Process Specifications
AGM-02-0204-ESP-P-0055	Gas Turbine Liquid Fuel Specification
AGM-02-0204-ESP-P-0056	Gas Turbine Demineralized Water Specification

5. ENVIRONMENTAL AND METEOROLOGICAL CONDITIONS

On table 1, are shown parameters and values related to environmental and meteorological conditions used at reference for the selected site at Margarita Island.

Tabla 1: Condiciones Ambientales del Área de Influencia del Proyecto

Parámetro	Valor
Temperatura media:	27,0 ºC
Temperatura máxima:	36,5 ºC
Temperatura mínima:	22,5 ºC
Punto de rocío medio:	18,0 ºC
Presión atmosférica media a nivel del mar:	1,013 bar
Pluviosidad media anual:	399 mm
Pluviosidad anual Península de Macanao:	300-500 mm
Humedad relativa media:	74 %
Velocidad media del viento:	13,9 km/h
Velocidad máxima sostenida del viento:	99,0 km/h
Dirección predominante de viento:	E - NE

6. CODES AND STANDARDS

The codes and standards listed below will be used during the design, fabrication and or installation of the dual fuel modification.

Codes and Standards	
IEEE	Institue of Electrical and Electronic Engineers
UL	Underwriters Labratories (electrical components)
ASME	American Society of Mecanical Engineers – B31.1 (piping fabrication)
NEC	National Electric Code
NEMA	National Electrical Manufacturer's Association
ANSI	American National Standards Institute

7. DUAL FUEL MODIFICATION PACKAGE INTERFACING CRITERIA

As indicated on document AGM-02-0204-ESP-P-0004 Design Basis section 14 System Integration and Interconnection Points, the identification will be the first task to be accomplished.

All drawings that were initially supplied by the OEM as documentation for the unit configuration were modified to include requirements for the dual fuel modification. These drawings are listed below is

section 11 and outline all the changes that occurred due to the implementation of the dual fuel modification.

8. EXISTING SYSTEM ON TURBINE THAT REQUIRE MODIFICATION.

See section 11 below.

9. NEW SYSTEMS THAT WILL BE ADDED TO THE TURBINE

See section 11 below.

10. ADDITIONAL BALANCE OF PLANT EQUIPMENT THAT WILL NEED TO BE SUPPORT FOR DUAL FUEL OPERATIONS.

See section 11 below.

11. INTERCONNECTING POINTS OVERVIEW

Interconnection points for the integration of the dual fuel modification are included in the list of drawings below.

Note: Other interconnection points for the turbine generator that were not affected by the dual fuel modification may or may not be included in these drawings.

1) Outline, GT Package Electrical Connection (ML 301) – AGM-02-0204-PLA-E-0002
2) Outline, GT Package Connections – Piping (ML 313) – AGM-02-0204-PLA-M-0003
3) Outline, GT Package Connections – Piping Notes (ML 314) – AGM-02-0204-PLA-M-0004
4) Interconnection Wiring Diagram – (ML 445) – AGM-02-0204-PLA-E-0058
5) Turbine Connection Diagram – (ML 401) – AGM-02-204-PLA-E-0007
6) Cable Summary – (ML 463) – AGM-02-0204-PLA-E-0006
7) Liquid Fuel Forwarding Skid – General Arrangement – AGM-02-0204-PLA-M-0034
8) Liquid Fuel Forwarding Skid – Electrical Schematic – AGM-02-0204-PLA-E-0036
9) Demineralized Water Forwarding Skid – General Arrangement – AGM-02-0204-PLA-M-00038
10) Demineralized Water Forwarding Skid – Electrical Schematic – AGM-02-0204-PLA-E-0040

11) Water Injection Skid – General Arrangement – AGM-02-0204-PLA-M-0041
12) Water Injection Skid – Electric Schematic – AGM-02-0204-PLA-E-0043
13) Liquid Fuel Management Spool – General Arrangement – AGM-02-0204-PLA-M-0075
14) One Line Diagram (AGM-02-0204-PLA-E-0008)

0 — N° PLANO: AGM-02-0204-PLA-I-0006

NOTES:

1. FLOW DIVIDER DESIGNED FOR #2 DISTILLATE FUEL. ACCORDING TO GE FUEL SPECIFICATION, REFER TO AGM-02-0204-ESP-P-0055.
2. SPECIFICATIONS AND COMPLIMENTARY DOCUMENTS ARE PROVIDED BY CUSTOMER AS PART OF THE ORIGINAL UNIT DOCUMENTATION.
3. FOR DIMENSION REFER TO AGM-02-0204-PLA-I-0046 (DEVICE SUMMARY)

PARTS LIST

ITEM	DESCRIPTION	VENDER/PART NUMBER	QTY
1	0.50"OD x 0.06"Wall TUBING - SS	N/A	48"
2	0.50" OD TUBE x $\frac{1}{2}$" MALE NPT ADAPTOR	SWAGELOK / SS-8-TA-1-8	6
3	MAGNETIC SPEED PICKUP	AL TEK / 70085-1010-403	3
4	5/8" TYPE-A PLAIN WASHER CS	N/A	3
5	FLOW DIVIDER ASSEMBLY	ROPER TYPE 19	1

I M P O R T A N T E

ESTE PLANO FUE ELABORADO EN AUTOCAD V.2008 CUALQUIER MODIFICACION REALIZADA EN CAMPO DEBERA SER NOTIFICADO A LA UNIDAD RESPONSABLE.
QUEDA PROHIBIDO CORREGIR ESTE PLANO SIN AUTORIZACION DE ESTA UNIDAD.

ALL DIMENSIONS IN BRACKETS [ ] ARE MILLIMETER; EXPRESSED DIMENSIONS ARE INCHES

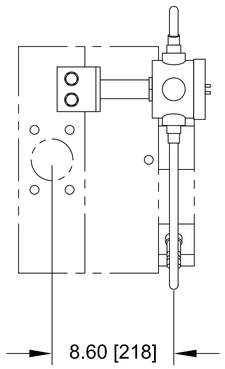

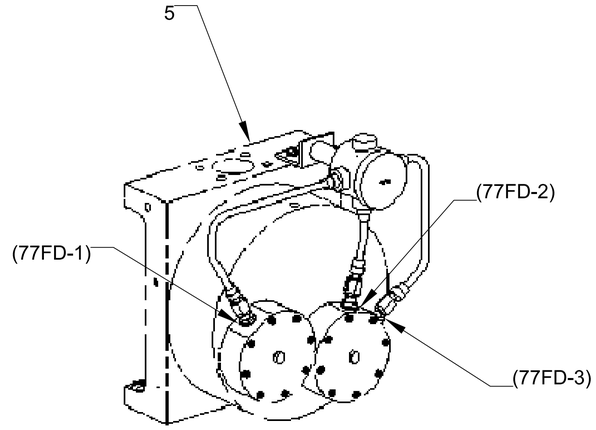

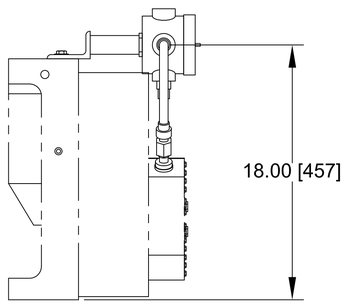

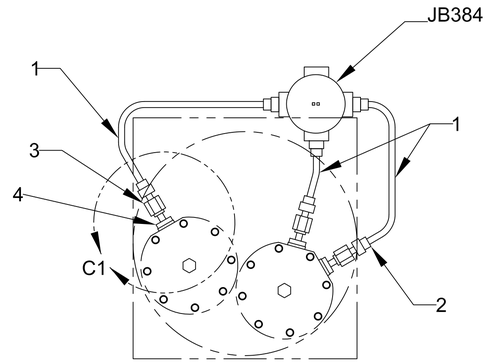

WIRING DIAGRAM

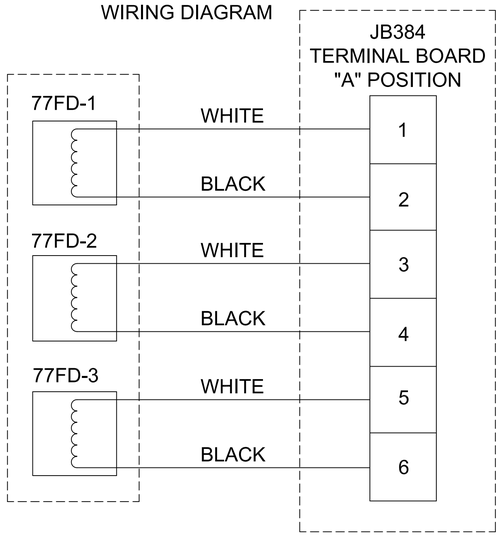

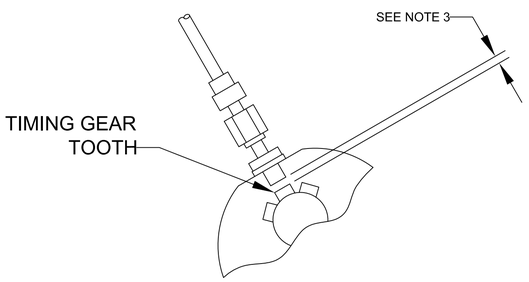

ENLARGED VIEW C-1

0	07/07/11	ISSUED FOR CONSTRUCTION	SAB	CB	TK
REV.	FECHA	REVISIONES O MODIFICACIONES	DIBUJO	REVISO	APROBO

REF. FABRICANTE		
REF. FABRICANTE	FABRICANTE	O/C:

AGM-02-0204-PLA-I-0046	DEVICE SUMMARY		
AGM-02-0204-ESP-P-0055	LIQUID FUEL SPECIFICATION		
215A4435	TUBE & FITTING ASSEMBLY		
348A9200	APPLIED PRATICES		
N° DE DOCUMENTO	DESCRIPCIÓN	REV.	FECHA

DOCUMENTOS DE REFERENCIA

DERWICK — ProEnergy SERVICES — CORPOELEC — La Electricidad de Caracas — SENECA

AMPLIACIÓN DE LA CAPACIDAD DE GENERACIÓN Y TRANSPORTE DE ELECTRICIDAD EN LA ISLA DE MARGARITA

FLOW DIVIDER & MAK PICKUP
DUAL FUEL MOD. UNITS 298034 & 298035
(MLI 0508)

PLANO N°: 409-2956-DF0508FDM	REV: 0		
PROYECTO N°: 409-2956-1			
CALCULO:	PROYECTO:	ESCALA: 1:5	PLANO No:
REVISADO: C. Brown	CALCULO:	FECHA: 07/07/11	AGM-02-0204-PLA-I-0006
DIBUJO: S. Boerckel	REVISADO: J. Castillo	DISK. N°	
APROBADO: T. Koontz	DIBUJO:	ESC./PLOTEO:	
ARCHIVO:	APROBADO: M. Monticelli	ARCHIVO:	PAGINA: 1 DE: 1 — REV. 0

F_A1_11 – 841x594mm

LINEA DE CORTE DE ORIGINAL
LINEA DE CORTE DE COPIA

N° PLANO: AGM-02-0204-PLA-I-0011 | 0

IMPORTANTE

ESTE PLANO FUE ELABORADO EN AUTOCAD V.2008 CUALQUIER MODIFICACION REALIZADA EN CAMPO DEBERA SER NOTIFICADO A LA UNIDAD RESPONSABLE.
QUEDA PROHIBIDO CORREGIR ESTE PLANO SIN AUTORIZACION DE ESTA UNIDAD.

ALL DIMENSIONS IN BRACKETS [ ] ARE MILLIMETER; EXPRESSED DIMENSIONS ARE INCHES

NOTES:

1. GENERAL MACHINING APPLIED PRACTICES ARE PER 348A9200.
2. PIPING APPLIED PRACTICES ARE PER 351A3700.
3. STRUCTURAL WELDS ARE PER P8A-AGI. FIGURE PER APPENDIX II. FILLER METAL COLUMN AB PER APPENDIX I.
4. INSTALL AND SUPPORT TUBING PER 215A4435 AND 362A1025.
5. TUBE RUNS ARE ILLUSTRATIVE ONLY.
6. SYSTEM PARAMETERS AND SPECIFICATIONS ARE BASED ON GE DRAWINGS 196D6058 (PROVIDED BY CUSTOMER). INCLUDING REQUIREMENTS FOR DUAL FUEL SYSTEMS PER CUSTOMER SCOPE OF WORK.

PARTS LIST

ITEM	QTY	DESCRIPTION	PART No	VENDOR
1	1	JUNCTION BOX	A36H308ALLP	HOFFMAN
2	3	PRESSURE TRANSMITTER	3051CG5A22A1B4Q4	ROSEMOUNT

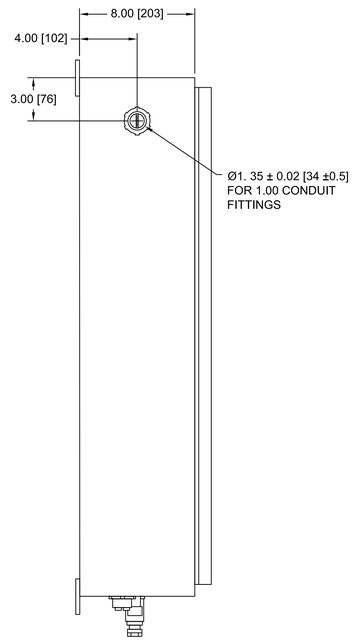

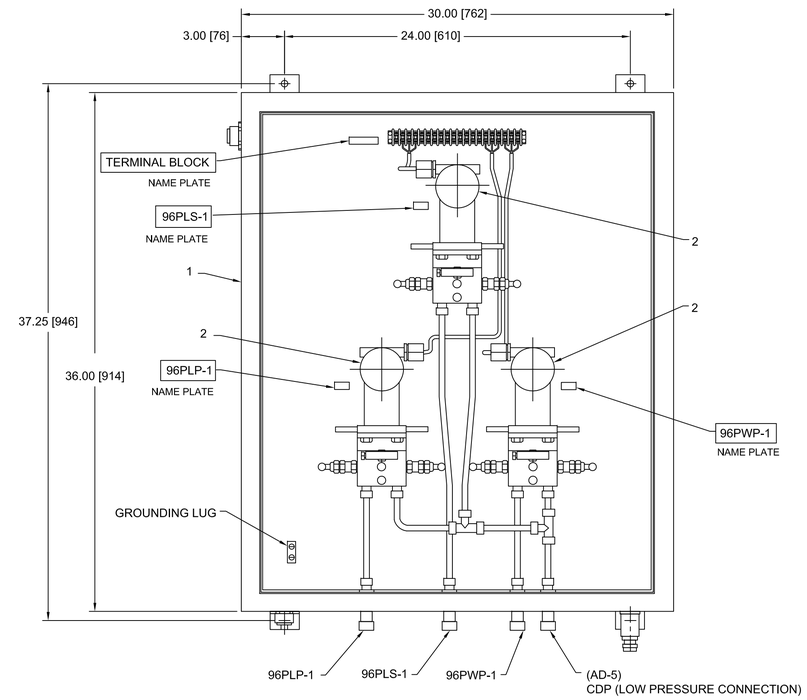

DOOR OMITTED FOR OR CLARITY

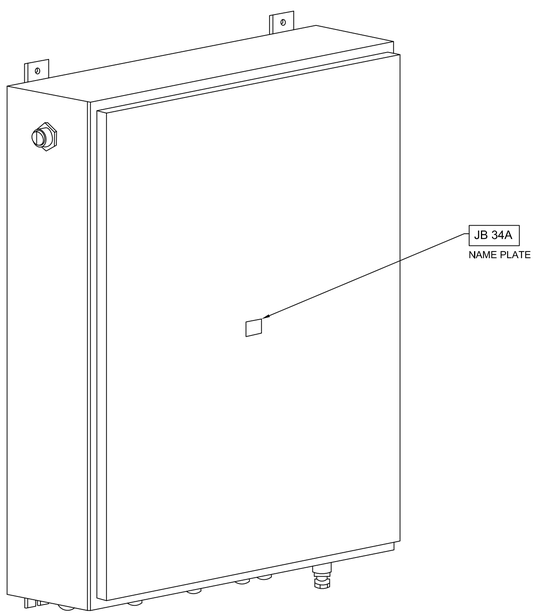

ISOMETRIC VIEW

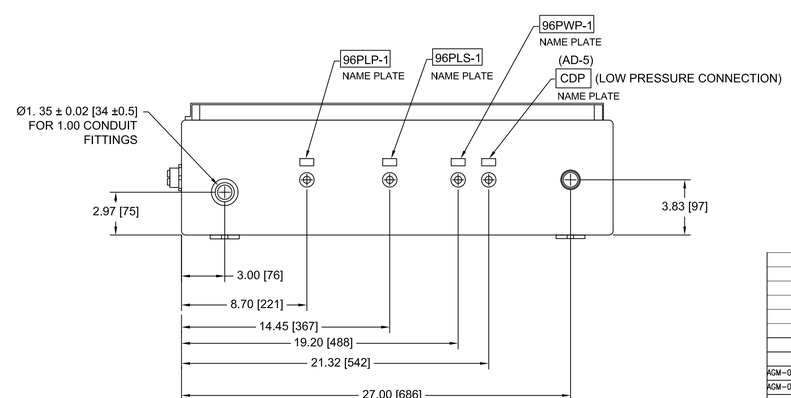

N° DE DOCUMENTO	DESCRIPCIÓN	REV.	FECHA
AGM-02-0204-PLA-I-0046	DEVICE SUMMARY		
AGM-02-0204-PLA-I-0012	PRESSURE TRANSDUCER PANEL ARRANGEMENT		

DOCUMENTOS DE REFERENCIA

REV.	FECHA	REVISIONES O MODIFICACIONES	DIBUJO	REVISO	APROBO
0	13/07/11	ISSUED FOR CONSTRUCTION, SEE NOTE:6	SAB	CB	TK

REF. FABRICANTE		
REF. FABRICANTE	FABRICANTE	O/C:

DERWICK Derwick Associates Corp. | ProEnergy SERVICES | CORPOELEC | La Electricidad de Caracas | GERENCIA FUNCIONAL DE INGENIERÍA Y PROYECTOS | SENECA

AMPLIACIÓN DE LA CAPACIDAD DE GENERACIÓN Y TRANSPORTE DE ELECTRICIDAD EN LA ISLA DE MARGARITA
PRESSURE TRANSDUCER PANEL ASSEMBLY-PURGE PROTECTION
DUAL FUEL MOD. UNITS 298034 & 298035
(MLI 0557T)

PLANO N°:	REV:		
PROYECTO N°: 409-2956-1			
CALCULO:	PROYECTO:	ESCALA: 1:5	PLANO No: AGM-02-0204-PLA-I-0011
REVISADO: C. Brown	CALCULO:	FECHA: 13/07/11	
DIBUJO: S. Boerckel	REVISADO: J. Castillo	DISK. N°	
APROBADO: T. Koontz	DIBUJO:	ESC./PLOTEO:	
ARCHIVO:	APROBADO: M. Monticelli	ARCHIVO:	PAGINA: 1 DE: 1 — REV. 0

F_A1_11 – 841x594mm

LINEA DE CORTE DE COPIA
LINEA DE CORTE DE ORIGINAL

N° PLANO: AGM-02-0204-PLA-I-0012 | 0

IMPORTANTE
ESTE PLANO FUE ELABORADO EN AUTOCAD V.2008
CUALQUIER MODIFICACION REALIZADA EN CAMPO
DEBERA SER NOTIFICADO A LA UNIDAD
RESPONSABLE.
EL PERSONAL NO CORREGIR ESTE PLANO SIN
AUTORIZACION DE ESTA UNIDAD.

ALL DIMENSIONS IN BRACKETS [ ] ARE MILLIMETER, EXPRESSED DIMENSIONS ARE INCHES

NOTES

1. GENERAL MACHINING APPLIED PRACTICES ARE PER 348A9200.
2. PIPING APPLIED PRACTICES ARE PER 351A3700.
3. PIPING WELDS ARE PER P8A–AG3, FILLER MATERIAL IS PER COLUMN 3 AU–L UNLESS OTHERWISE SPECIFIED IN THIS DOCUMENT.
4. STRUCTURAL WELDS ARE PER P8A –AG1, FILLER MATERIAL IS PER COLUMN AB UNLESS OTHERWISE SPECIFIED.
5. INSTALL AND SUPPORT TUBING PER 215A4435 AND 362A1025.
6. INSTALL TUBE UNIONS AS REQUIRED.
7. TUBE RUNS ARE ILLUSTRATIVE ONLY.
8. CLEAN AND PAINT PER ML ITEM 0108.
9. FLOW DIRECTION IS DESIGNATED WITH AN ARROW SYMBOL.
10. SLOPE .25 INCH [6.4] PER FOOT MINIMUM.
11. LINEAR DIMENSIONS IN BRACKETS [ ] ARE IN MILLIMETERS AND ARE FOR REFERENCE ONLY. ALL DIMENSIONS OF THE MANUFACTURED PART (S) MUST EQUAL THE DECIMAL – INCH DIMENSIONS AND, WHEN REQUIRED, BE RECORDED IN DECIMAL – INCH UNITS. MILLIMETER DIMENSIONS SHOWN MAY NOT CONVERT EXACTLY FROM INCHES DUE TO DIMENSIONAL ROUNDING.
12. SYSTEM PARAMETERS AND SPECIFICATIONS ARE BASED ON GE DRAWING 117E4274 (PROVIDED BY CUSTOMER). INCLUDING REQUIRMENTS FOR DUAL FUEL SYSTEMS PER CUSTOMER SCOPE OF WORK.

PARTS LIST		
ITEM	QTY	DESCRIPTION
1	1	(JB 34A) JUNCTION BOX
2	20FT [6096]	UNISTRUT
3	10	UNISTRUT CLAMP
4	8	6"x6" [152x152] PLATE
5	45FT [13716]	1/2"OD x 0.060"Wall SS TUBING
6	16FT [4877]	2"x2" ANGLE
7	20	1/2"MNPT x 1/2"OD TUBE SWAGELOK FITTING
8	7	COUPLING SLEEVE

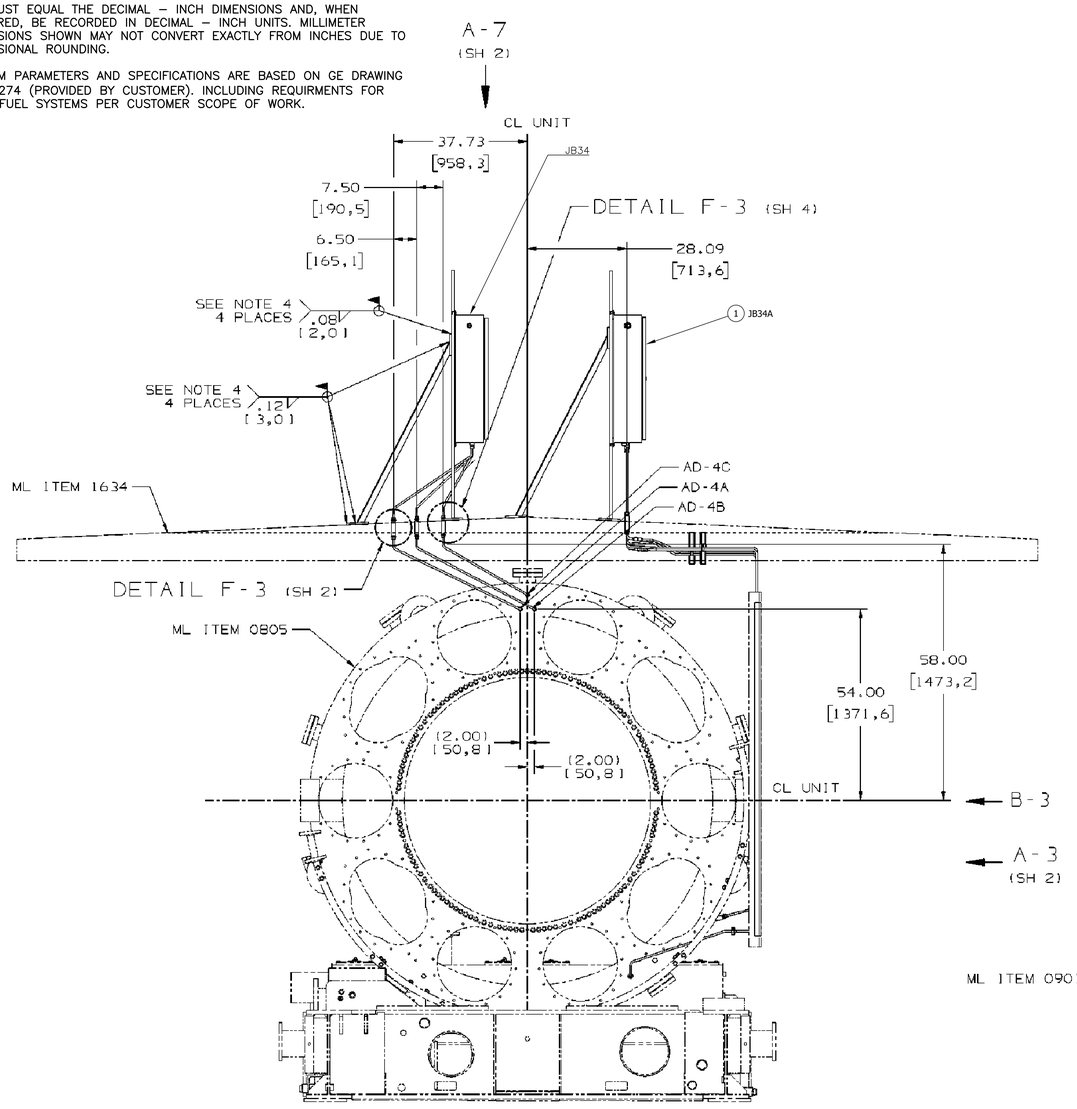

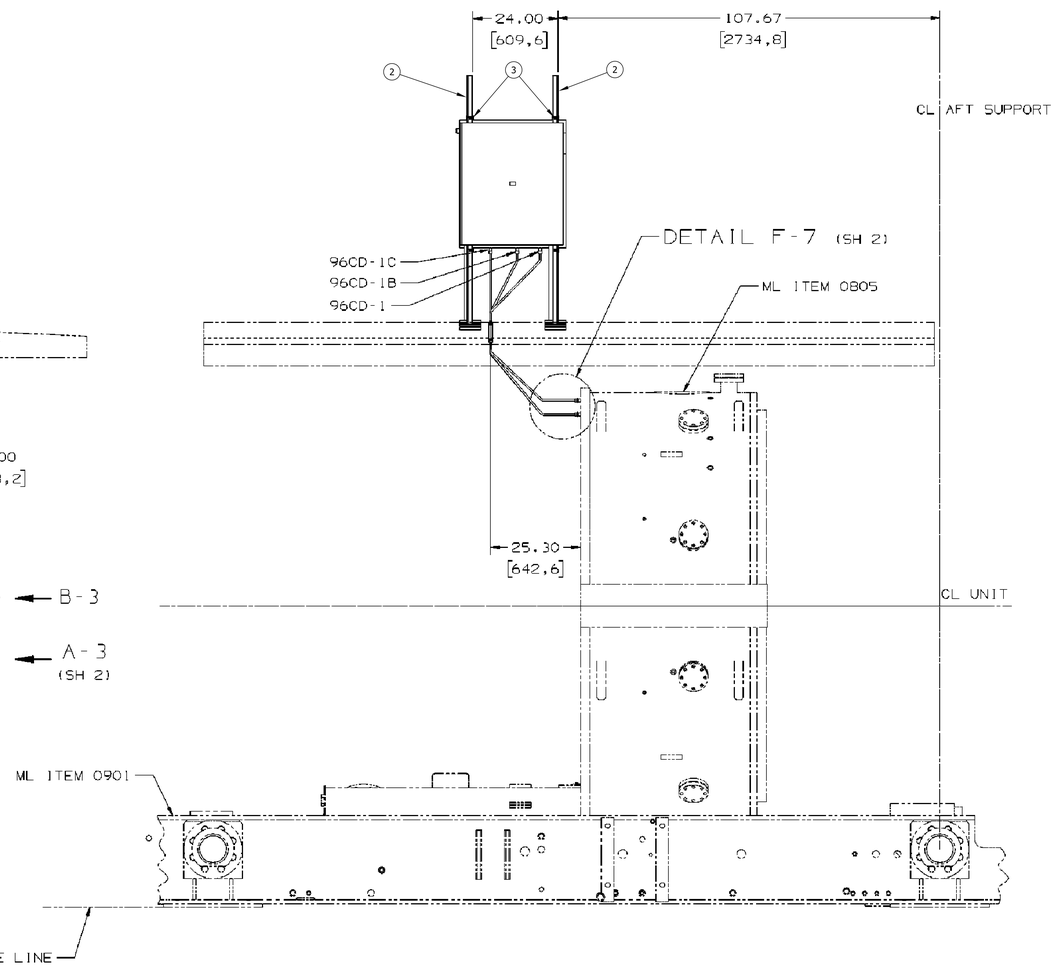

VIEW B-3 (C-5)
(JB34)

G7 MSDM (SST TRANSDUCER BOX ONLY) KG/Cm² GAUGES

G6 MSDM (CS TRANSDUCER BOX ONLY) KG/Cm² GAUGES

G5 MSDM (SST TRANSDUCER BOX ONLY) BAR GAUGES

G4 MSDM (CS TRANSDUCER BOX ONLY) BAR GAUGES

G3 MSDM (SST TRANSDUCER BOX ONLY) KPA GAUGES

G2 SUMMARY FOR OFF BASE LAGGING

G1 MSDM (CS TRANSDUCER BOX ONLY) KPA GAUGES

REV.	FECHA	REVISIONES O MODIFICACIONES	DIBUJO	REVISO	APROBO
0	14/07/11	ISSUED FOR CONSTRUCTION, SEE NOTE 12	SAB	CB	TK

REF. FABRICANTE		
REF. FABRICANTE	FABRICANTE	O/C:

DOCUMENTOS DE REFERENCIA			
AGM-02-0204-ESP-G-0061	INTERCONNECTION POINTS		
AGM-02-0204-PLA-I-0046	DEVICE SUMMARY		
N° DE DOCUMENTO	DESCRIPCIÓN	REV.	FECHA

DERWICK | ProEnergy | CORPOELEC | La Electricidad de Caracas | SENECA

AMPLIACIÓN DE LA CAPACIDAD DE GENERACIÓN Y TRANSPORTE DE ELECTRICIDAD EN LA ISLA DE MARGARITA

PLANO N°: | REV.:

PROYECTO N°: 409-2956-1

PRESSURE TRANSDUCER PANEL ARRANGEMENT DUAL FUEL MOD. UNITS 298034 & 298035 (MLI 0557T)

CALCULÓ:	PROYECTO:	ESCALA: 1:10	PLANO No:
REVISADO: C. Brown	CALCULÓ:	FECHA: 14/07/11	AGM-02-0204-PLA-I-0012
DIBUJÓ: S. Boerckel	REVISADO: J. Castillo	DISK. N°	
APROBADO: T. Koontz	DIBUJO:	ESC./PLOTEO:	REV. 0
ARCHIVO:	APROBADO: M. Montbeelli	ARCHIVO:	PAGINA: 1 DE: 4

F_A0_11 – 1189x841mm

N° PLANO: AGM-02-0204-PLA-I-0012 | 0

IMPORTANTE
ESTE PLANO FUE ELABORADO EN AUTOCAD V.2008
CUALQUIER MODIFICACION REALIZADA EN CAMPO
DEBERA SER NOTIFICADO A LA UNIDAD
RESPONSABLE.
EL NO HACERLO CORREGIR ESTE PLANO SIN
AUTORIZACION DE ESTA UNIDAD.

ALL DIMENSIONS IN BRACKETS [ ] ARE MILLIMETER, EXPRESSED DIMENSIONS ARE INCHES

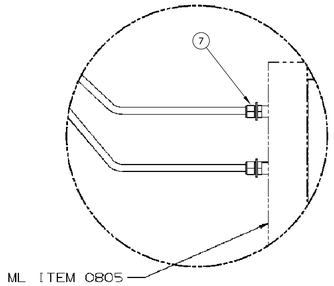

DETAIL F-7 (SH 1)
3 PLACES

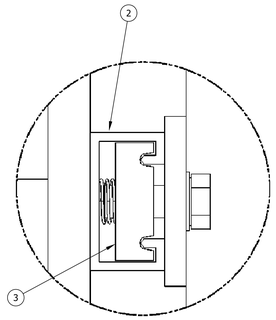

DETAIL F-5 (SH 1)
(8 PLACES)

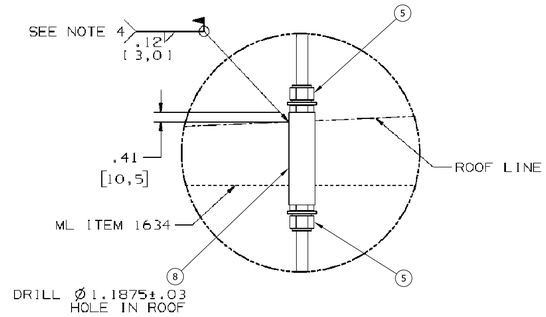

DETAIL F-3 (SH 1)
(7 PLACES)

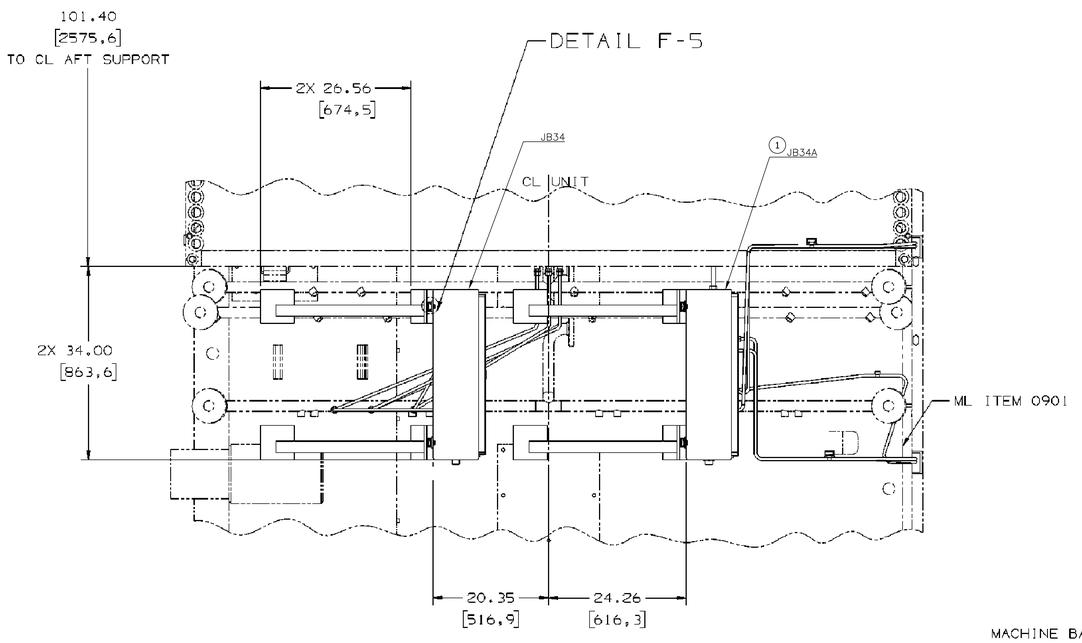

VIEW A-7 (SH 1)

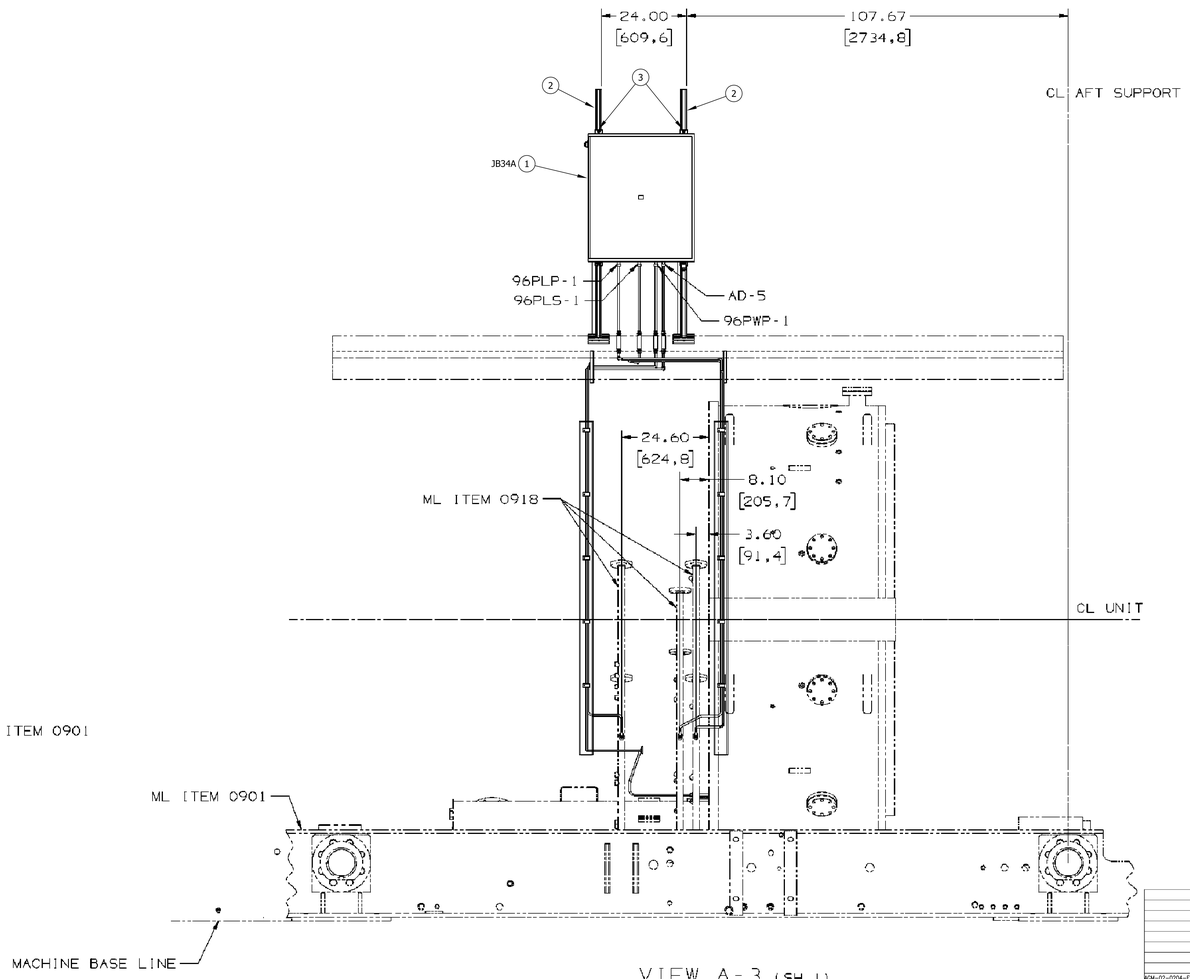

VIEW A-3 (SH 1)
(JB34A)

N° DE DOCUMENTO	DESCRIPCIÓN	REV.	FECHA
AGM-02-0204-ESP-G-0061	INTERCONNECTION POINTS		
AGM-02-0204-PLA-I-0046	DEVICE SUMMARY		

DOCUMENTOS DE REFERENCIA

REV.	FECHA	REVISIONES O MODIFICACIONES	DIBUJO	REVISO	APROBO
0	14/07/11	ISSUED FOR CONSTRUCTION, SEE NOTE 12 SHEET 1	SAB	GB	TK

REF. FABRICANTE		
REF. FABRICANTE	FABRICANTE	O/C:

DERWICK Derwick Associates Ecuador | ProEnergy Services | CORPOELEC Venezuela Electricidad | La Electricidad de Caracas | SENECA Servicios Nacional de Ingeniería y Proyectos

AMPLIACIÓN DE LA CAPACIDAD DE GENERACIÓN Y TRANSPORTE DE ELECTRICIDAD EN LA ISLA DE MARGARITA

PRESSURE TRANSDUCER PANEL ARRANGEMENT DUAL FUEL MOD. UNITS 298034 & 298035 (MLI 0557T)

PLANO N°:	REV:		
PROYECTO N°: 409-2956-1			
CALCULO:	PROYECTO:	ESCALA: 1:15	PLANO No:
REVISADO: C. Brown	CALCULO:	FECHA: 14/07/11	AGM-02-0204-PLA-I-0012
DIBUJO: S. Boerckel	REVISADO: J. Castillo	DISK. N°	
APROBADO: T. Koontz	DIBUJO:	ESC./PLOTEO:	REV. 0
ARCHIVO:	APROBADO: M. Montilvelli	ARCHIVO:	PAGINA: 2 DE: 4

F_A0_11 – 1189x841mm

N° PLANO: AGM-02-0204-PLA-I-0012 | 0

IMPORTANTE
ESTE PLANO FUE ELABORADO EN AUTOCAD V.2008
CUALQUIER MODIFICACION REALIZADA EN CAMPO
DEBERA SER NOTIFICADO A LA UNIDAD
RESPONSABLE.
NO ESTA PERMITIDO CORREGIR ESTE PLANO SIN
AUTORIZACION DE ESTA UNIDAD.

ALL DIMENSIONS IN BRACKETS [ ] ARE MILLIMETER, EXPRESSED
DIMENSIONS ARE INCHES

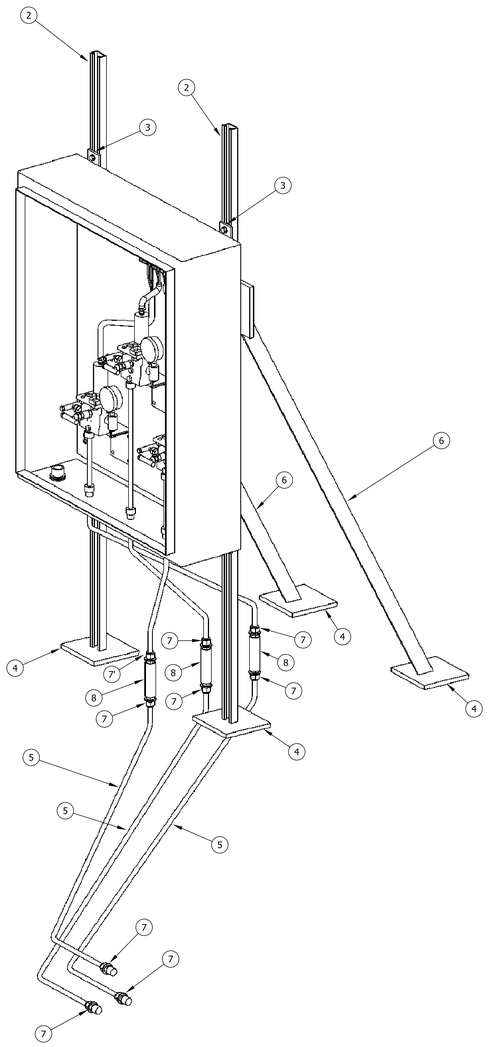

ISOMETRIC VIEW
(JB 34)

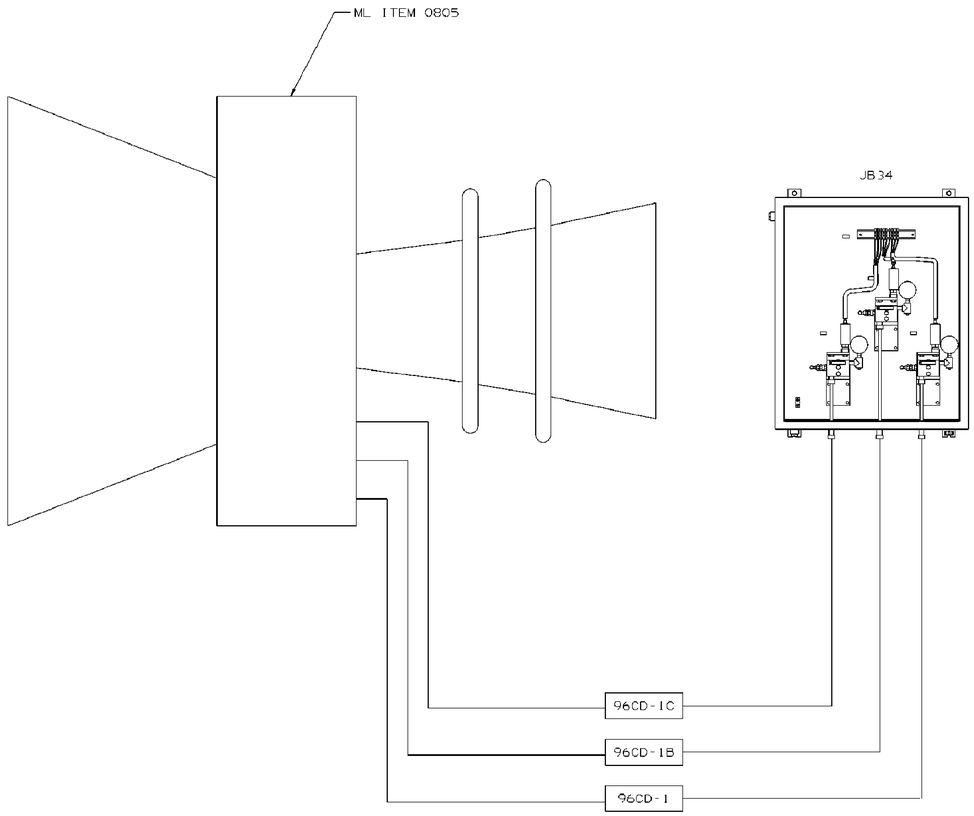

SCHEMATIC DIAGRAM

N° DE DOCUMENTO	DESCRIPCIÓN	REV.	FECHA
AGM-02-0204-ESP-G-0061	INTERCONNECTION POINTS		
AGM-02-0204-PLA-I-0046	DEVICE SUMMARY		

DOCUMENTOS DE REFERENCIA

REV.	FECHA	REVISIONES O MODIFICACIONES	DIBUJO	REVISO	APROBO
0	14/07/11	ISSUED FOR CONSTRUCTION, SEE NOTE 12 SHEET 1	SAB	CB	TK

REF. FABRICANTE	FABRICANTE	O/C:
REF. FABRICANTE		

DERWICK | ProEnergy | CORPOELEC | Electricidad de Caracas | SENECA

AMPLIACIÓN DE LA CAPACIDAD DE GENERACIÓN Y TRANSPORTE DE ELECTRICIDAD EN LA ISLA DE MARGARITA

PRESSURE TRANSDUCER PANEL ARRANGEMENT
DUAL FUEL MOD. UNITS 298034 & 298035
(MLI 0557T)

PLANO N°:	REV: 0		
PROYECTO N°: 409-2956-1			
CALCULO:	PROYECTO:	ESCALA: 1:15	PLANO No: AGM-02-0204-PLA-I-0012
REVISADO: C. Brown	CALCULO:	FECHA: 14/07/11	
DIBUJO: S. Boerckel	REVISADO: J. Castillo	DISK. N°	
APROBADO: T. Koontz	DIBUJO:	ESC./PLOTEO:	REV: 0
ARCHIVO:	APROBADO: M. Montiel	ARCHIVO:	PAGINA: 3 DE: 4

F_A0_L1 – 1189x841mm

N° PLANO: AGM-02-0204-PLA-I-0012 | 0

IMPORTANTE
ESTE PLANO FUE ELABORADO EN AUTOCAD V.2008
CUALQUIER MODIFICACION REALIZADA EN CAMPO
DEBERA SER NOTIFICADO A LA UNIDAD
RESPONSABLE.
EL NO CUMPLIMIENTO CORREGIR ESTE PLANO SIN
AUTORIZACION DE ESTA UNIDAD.

ALL DIMENSIONS IN BRACKETS [ ] ARE MILLIMETER, EXPRESSED
DIMENSIONS ARE INCHES

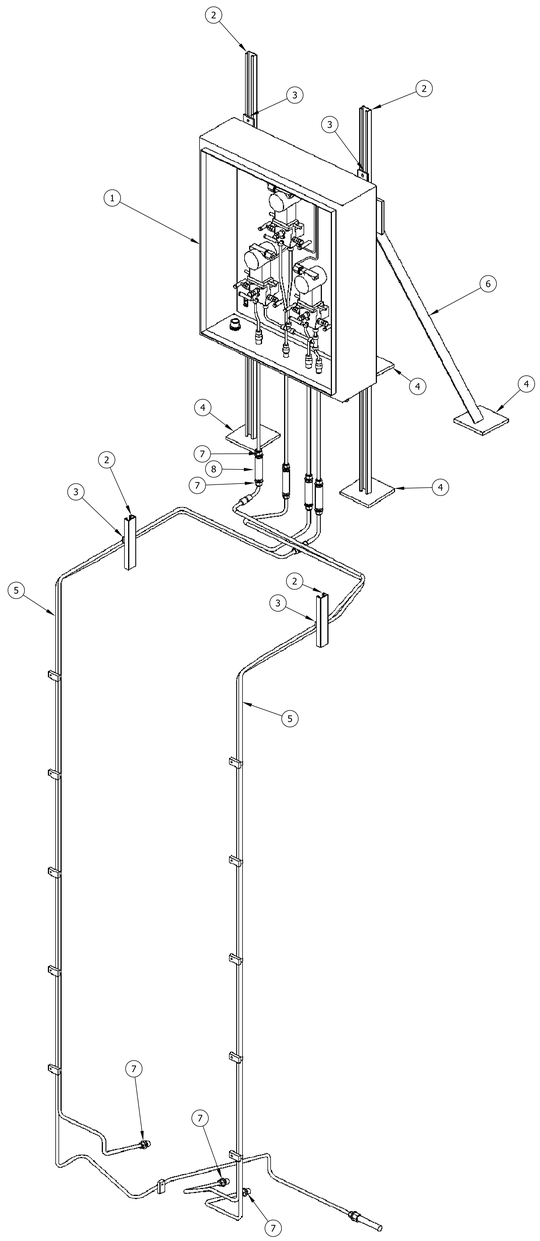

ISOMETRIC VIEW
(JB34A)

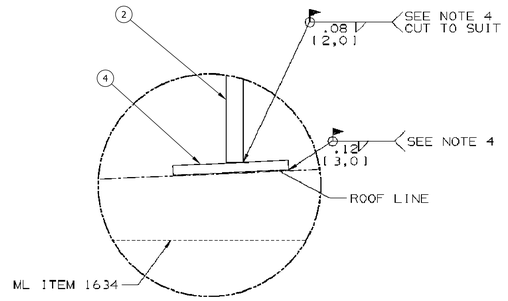

DETAIL F-3 (SH 1)
(8 PLACES)

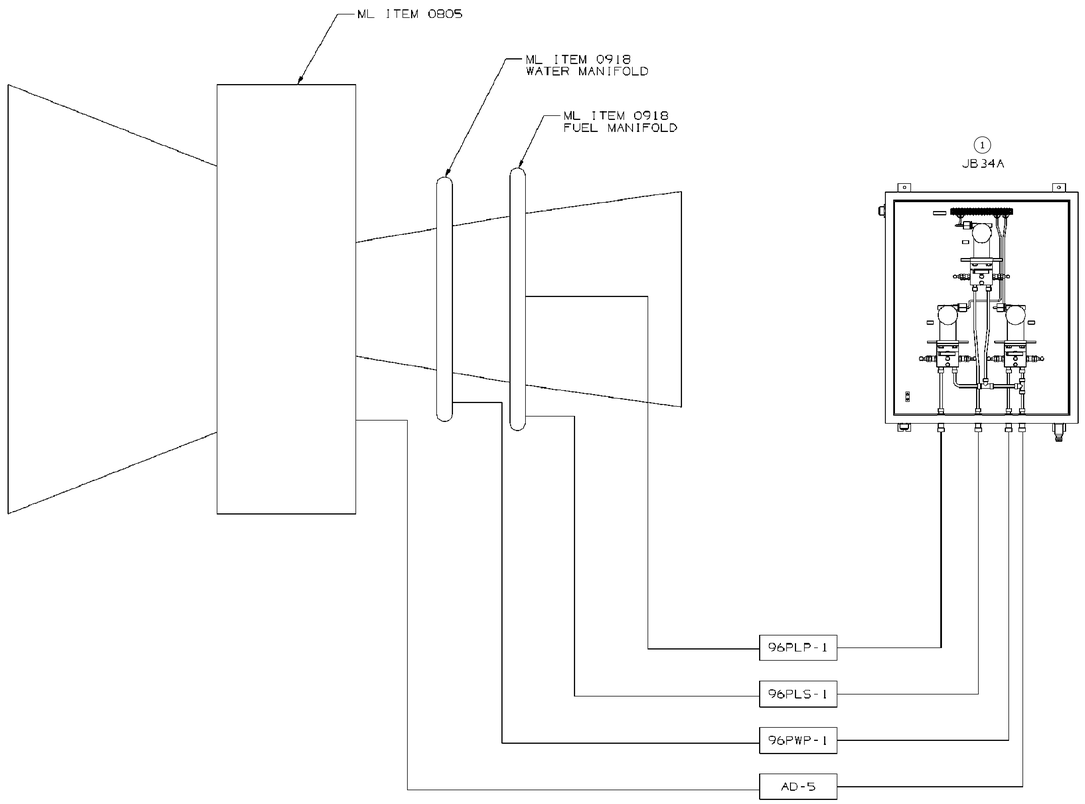

SCHEMATIC DIAGRAM
(JB34A)

0	14/07/11	ISSUED FOR CONSTRUCTION, SEE NOTE 12 SHEET 1	SAB	CB	TK
REV.	FECHA	REVISIONES O MODIFICACIONES	DIBUJO	REVISO	APROBO

REF. FABRICANTE		
REF. FABRICANTE	FABRICANTE	O/C:

AGM-02-0204-ESP-G-0061	INTERCONNECTION POINTS		
AGM-02-0204-PLA-I-0046	DEVICE SUMMARY		
N° DE DOCUMENTO	DESCRIPCIÓN	REV.	FECHA

DOCUMENTOS DE REFERENCIA

DERWICK Energy Associates Group | ProEnergy Services a Wood Group Company | CORPOELEC Corporación Venezolana de Electricidad | La Electricidad de Caracas | GERENCIA FUNCIONAL DE INGENIERIA Y PROYECTOS | SENECA

AMPLIACIÓN DE LA CAPACIDAD DE GENERACIÓN Y TRANSPORTE DE ELECTRICIDAD EN LA ISLA DE MARGARITA

PLANO N°: | REV:

PRESSURE TRANSDUCER PANEL ARRANGEMENT
DUAL FUEL MOD. UNITS 298034 & 298035
(MLI 0557T)

PROYECTO N°: 409-2956-1

CALCULO:	PROYECTO:	ESCALA: 1:15	PLANO No:
REVISADO: C. Brown	CALCULO:	FECHA: 14/07/11	AGM-02-0204-PLA-I-0012
DIBUJO: S. Boerckel	REVISADO: J. Castillo	DISK. N°:	
APROBADO: T. Koontz	DIBUJO:	ESC./PLOTEO:	REV. 0
ARCHIVO:	APROBADO: M. MontiCastillo	ARCHIVO:	PAGINA: 4 DE: 4

F_A0_11 – 1189x841mm

LINEA DE CORTE DE ORIGINAL
LINEA DE CORTE DE COPIA

N° PLANO: AGM-02-0204-PLA-I-0015 | 0

NOTES:
1. NUMBERS 1–10 ISOLATION VALVE ARE TO BE CONNECTION TO CORRESPONDING NUMBERS ON SELECTOR VALVE.
2. SYSTEM PARAMETERS AND SPECIFICATIONS ARE BASED ON TYPICAL REQUIREMENTS FOR 7EA DLN 1.0 DUAL FUEL SYSTEMS AND CUSTOMER SCOPE OF WORK.

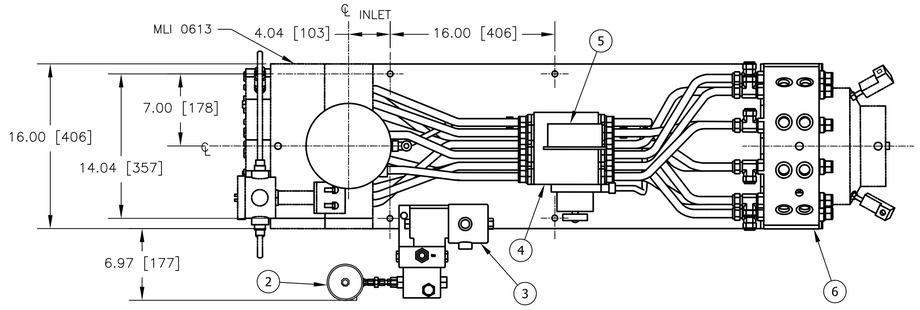

VIEW F–5

IMPORTANTE
ESTE PLANO FUE ELABORADO EN AUTOCAD V.2008 CUALQUIER MODIFICACION REALIZADA EN CAMPO DEBERA SER NOTIFICADO A LA UNIDAD RESPONSABLE.
QUEDA PROHIBIDO CORREGIR ESTE PLANO SIN AUTORIZACION DE ESTA UNIDAD.

ALL DIMENSIONS IN BRACKETS [ ] ARE MILLIMETER; EXPRESSED DIMENSIONS ARE INCHES

PARTS LIST

ITEM	QTY	DESCRIPTION	VENDOR/MODEL
1	1	FLOW DIVIDER	ROPER INDUSTRIES / FIG 20095 TYPE 19
2	1	PRESSURE REGULATOR	FISHER / MODEL 1301F
3	1	HYDRAULIC VALVE	PARKER / D3W1BVDEV14X2692
3A	1	FILTER	PARKER / F315P110QH14928
4	1	SELECTOR VALVE	TRILINE / 224B9577
5	1	PRESSURE GAUGE	ASHCROFT / 45–1279SS–02L–XLL–1000psi/kPa
6	1	ISOLATION VALVE	TRILINE / N2984517

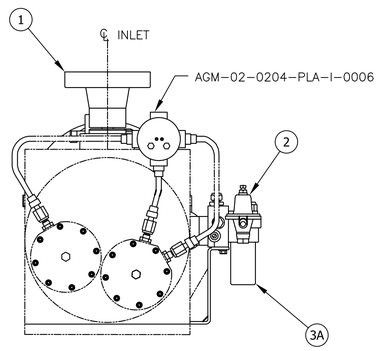

VIEW D–8

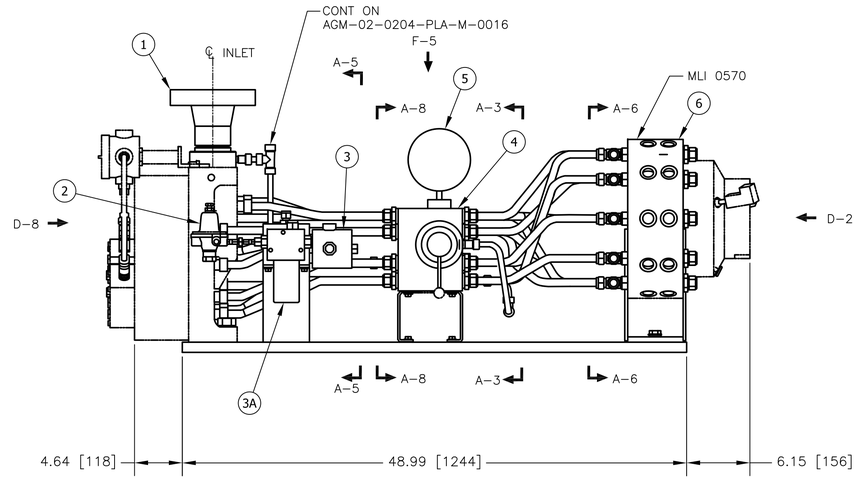

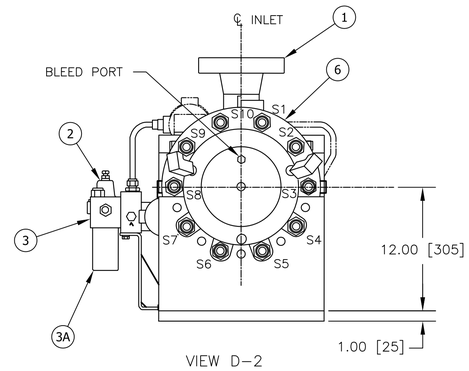

VIEW D–2

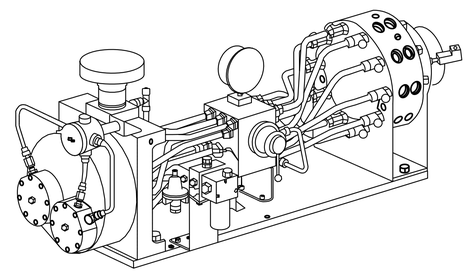

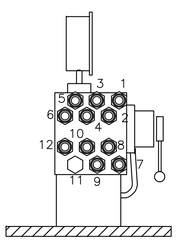

SECTION A–8

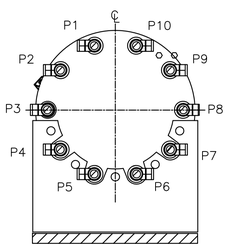

SECTION A–6

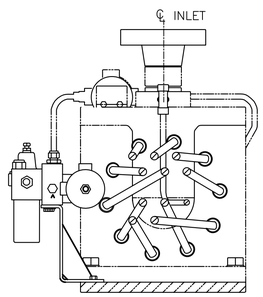

SECTION A–5

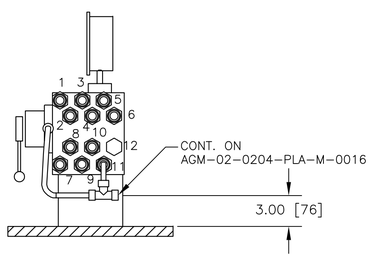

SECTION A–3

N° DE DOCUMENTO	DESCRIPCIÓN	REV.	FECHA
AGM–02–0204–PLA–M–0016	LIQUID FUEL PIPING ARRANGEMENT		
AGM–02–0204–PLA–I–0006	FLOE DIVIDER & MAG PICKUP		

DOCUMENTOS DE REFERENCIA

REV.	FECHA	REVISIONES O MODIFICACIONES	DIBUJO	REVISO	APROBO
0	14/07/11	ISSUED FOR CONSTRUCTION	SAB	CB	TK

REF. FABRICANTE		
REF. FABRICANTE	FABRICANTE	O/C:

DERWICK ASSOCIATES CORP. · ProEnergy SERVICES · CORPOELEC · La Electricidad de Caracas · GERENCIA FUNCIONAL DE INGENIERIA Y PROYECTOS · SENECA

AMPLIACIÓN DE LA CAPACIDAD DE GENERACIÓN Y TRANSPORTE DE ELECTRICIDAD EN LA ISLA DE MARGARITA

FLOW DIVIDER
DUAL FUEL MOD. UNITS 298034 & 298035
(MLI 0910)

PLANO N°:	REV:		
PROYECTO N°: 409–2956–1			
CALCULO:	PROYECTO:	ESCALA: 1:7	PLANO No: AGM–02–0204–PLA–I–0015
REVISADO: C. Brown	CALCULO:	FECHA: 14/07/11	
DIBUJO: S. Boerckel	REVISADO: J. Castillo	DISK. N°	
APROBADO: T. Koontz	DIBUJO:	ESC./PLOTEO:	
ARCHIVO:	APROBADO: M. Monticelli	ARCHIVO:	PAGINA: 1 DE: 1 — REV. 0

F_A1_11 – 841x594mm

LINEA DE CORTE DE COPIA
LINEA DE CORTE DE ORIGINAL

LINEA DE CORTE DE ORIGINAL
LINEA DE CORTE DE COPIA

N° PLANO: AGM-02-0204-PLA-I-0017 | 1

I M P O R T A N T

ESTE PLANO FUE ELABORADO EN AUTOCAD V.2008 CUALQUIER MODIFICACION REALIZADA EN CAMPO DEBERA SER NOTIFICADO A LA UNIDAD RESPONSABLE.
QUEDA PROHIBIDO CORREGIR ESTE PLANO SIN AUTORIZACION DE ESTA UNIDAD.

ALL DIMENSIONS IN BRACKETS [ ] ARE MILLIMETER, EXPRESSED DIMENSIONS ARE INCHES

NOTES:

1. FOR INSTRUMENT SETTINGS REFER TO AGM-02-0204-PLA-I-0046 (DEVICE SUMMARY) MLI 0414.
2. FOR MECHANICAL SEE: PANEL MOUNTED TO LIQUID FUEL DUPLEX FILTERS. REFER TO AGM-02-0204-PLA-M-0016.
3. FOR ELECTRICAL REFER TO AGM-02-0204-PLA-E-0006 & AGM-02-0204-PLA-E-0032

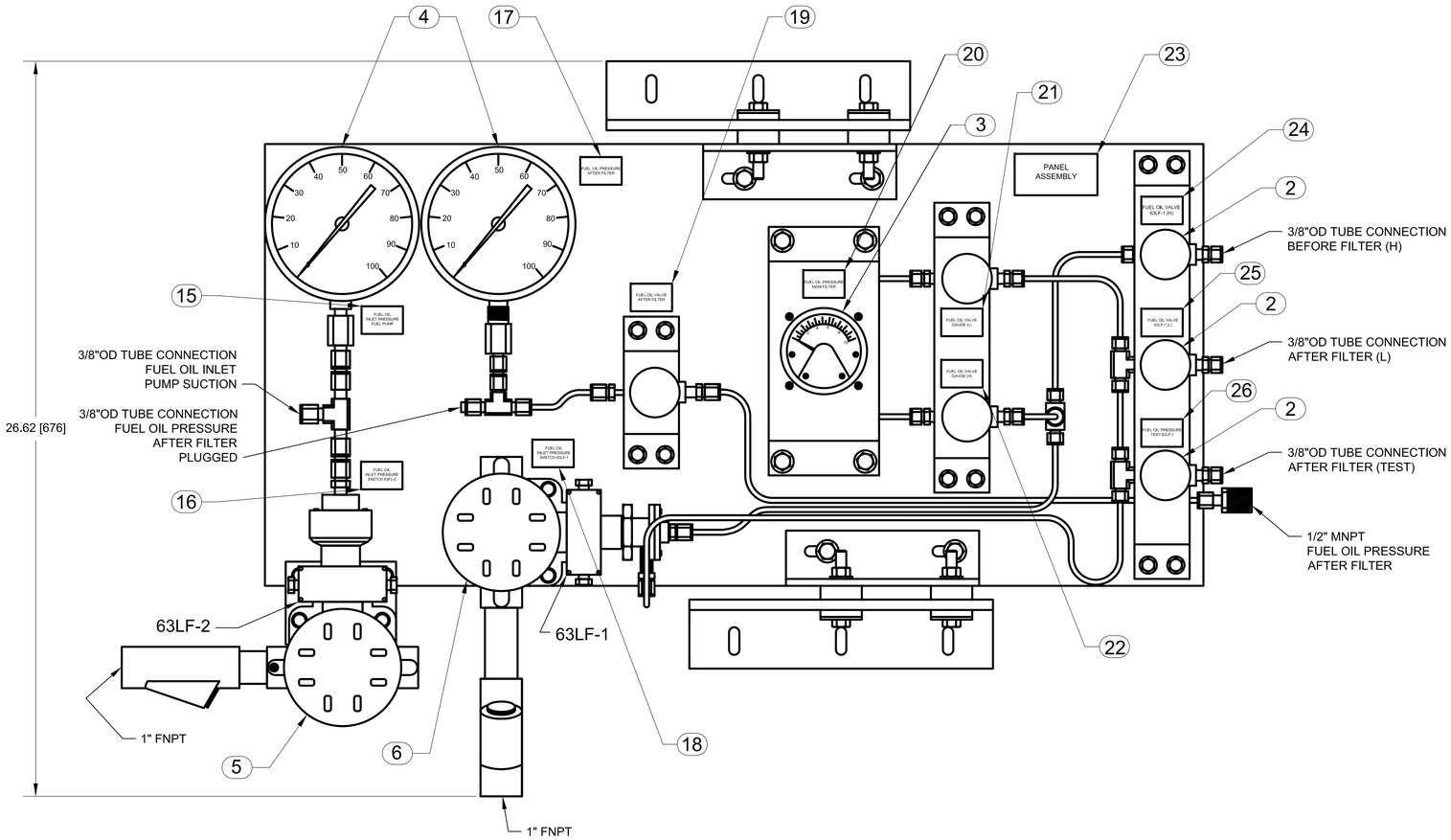

ITEM	QTY	DEVICE No	PART NUMBER	DESCRIPTION
2	6	-------	SS-1RF4	SWAGELOK NEEDLE VALVE
3	1	-------	120SA-10-VO	MID-WEST INSTRUMENT U.S.A. D/P GAUGE MODEL 120
4	2	-------	45-1279-88-04L-100#	ASHCROFT DURAGAUGE
5	1	63FL-2	4B3-P45-M4-C1A-TTWVXZ	SOR PRESSURE SWITCH
6	1	63FL-1	101B3-P3-M4-C1A-TTWVX4	SOR PRESSURE SWITCH

ITEM	LABELS
15	FUEL OIL INLET PRESSURE FUEL PUMP
16	FUEL OIL INLET PRESSURE SWITCH 63LF-2
17	FUEL OIL PRESSURE AFTER FILTER
18	FUEL OIL INLET PRESSURE SWITCH 63LF-1
19	FUEL OIL VALVE AFTER FILTER
20	FUEL OIL PRESSURE MAIN FILTER
21	FUEL OIL VALVE GAUGE (L)
22	FUEL OIL VALVE GAUGE (H)
23	LIQUID FUEL PANEL ASSEMBLY
24	FUEL OIL VALVE 63LF-1(H)
25	FUEL OIL VALVE 63LF-1(L)
26	FUEL OIL PRESSURE TEST 63LF-1

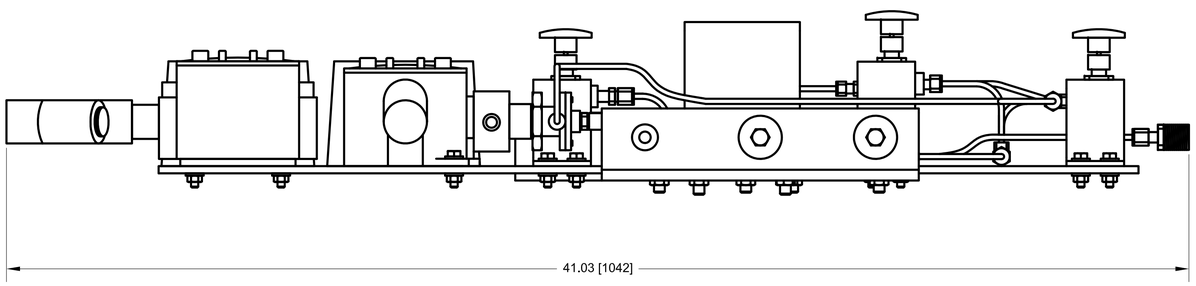

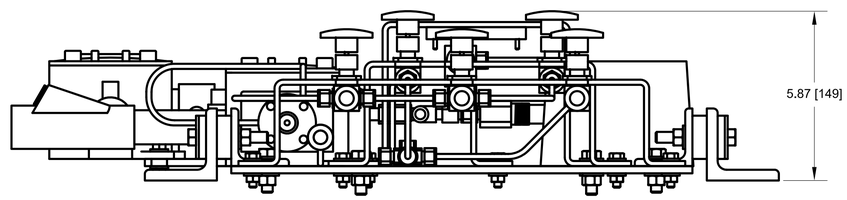

REV.	FECHA	REVISIONES O MODIFICACIONES	DIBUJO	REVISO	APROBO
1	26/05/11	REVISED PER INELMECA COMMENTS	SAB	CB	TK
0	10/03/11	ISSUED FOR FABRICATION	SAB	CB	TK

REF. FABRICANTE		
REF. FABRICANTE	FABRICANTE	O/C:

N° DE DOCUMENTO	DESCRIPCIÓN	REV.	FECHA
AGM-02-0204-PLA-M-0016	LIQUID FUEL PIPING ARRANGEMENT		
AGM-02-0204-PLA-I-0046	DEVICE SUMMARY		
AGM-02-0204-PLA-E-0032	CONDUIT ARRANGEMENT – FIELD WIRING		
AGM-02-0204-PLA-E-0006	CABLE SUMMARY		

DOCUMENTOS DE REFERENCIA

DERWICK Associates Corp. | ProEnergy SERVICES | CORPOELEC | La Electricidad de Caracas | GERENCIA FUNCIONAL DE INGENIERIA Y PROYECTOS | SENECA

AMPLIACIÓN DE LA CAPACIDAD DE GENERACIÓN Y TRANSPORTE DE ELECTRICIDAD EN LA ISLA DE MARGARITA

LIQUID FUEL PANEL ASSEMBLY
DUAL FUEL MOD. UNITS 298034 & 298035
(MLI 0910)

PLANO N°: | REV:
PROYECTO N°: 409-2956-1

CALCULO:	PROYECTO:	ESCALA: 1:2.50	PLANO No: AGM-02-0204-PLA-I-0017
REVISADO:	CALCULO:	FECHA: 26/05/11	
DIBUJO: SAB	REVISADO: J. Castillo	DISK. N°	
APROBADO: TK	DIBUJO:	ESC./PLOTEO:	
ARCHIVO:	APROBADO: M. Monticelli	ARCHIVO:	PAGINA: 1 DE: 1 — REV. 1

F_A1_11 – 841x594mm

LINEA DE CORTE DE COPIA
LINEA DE CORTE DE ORIGINAL

LINEA DE CORTE DE ORIGINAL
LINEA DE CORTE DE COPIA

N° PLANO: AGM-02-0204-PLA-I-0019 | 0

NOTES:

1. GENERAL MACHINING APPLIED PRACTICES ARE PER 348A9200.
2. PIPING APPLIED PRACTICES ARE PER 351A3700.
3. CLEAN AND PAINT PER MLI 0108.
4. ALL TUBING TO THE BE Ø.375 [9.5] OD UNLESS OTHERWISE SPECIFIED.
5. SYSTEM PAREMETERS AND SPECIFICATIONS ARE BASED ON TYPICAL REQUIREMENTS FOR 7EA DLN 1.0 DUAL FUEL SYSTEMS AND CUSTOMER SCOPE OF WORK.

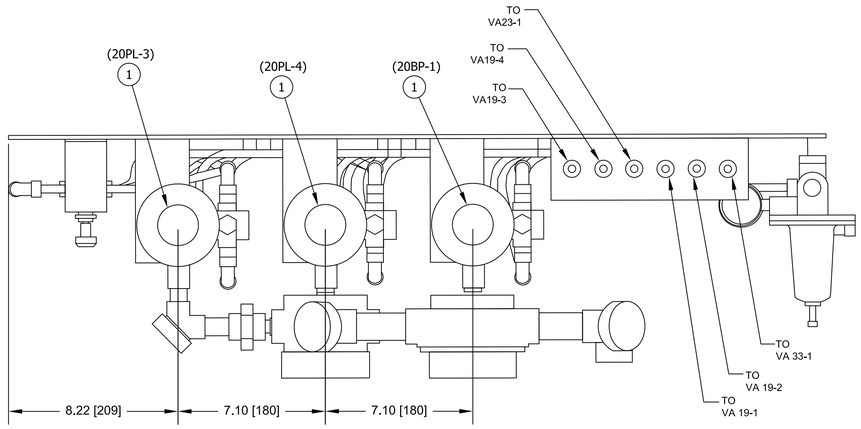

PARTS LIST			
ITEM No	DEVICE No	DESCRIPTION	VENDOR/MODEL
1	20PW-1 20PW-2 20PL-1 20PL-3 20PL-4 20BP-1	SOLENOID VALVE	ASCO / HV270888001
2	VPR54-1	REGULATING VALVE	FISCHER / 1301F

I M P O R T A N T E

ESTE PLANO FUE ELABORADO EN AUTOCAD V.2008
CUALQUIER MODIFICACION REALIZADA EN CAMPO DEBERA SER NOTIFICADO A LA UNIDAD RESPONSABLE.
QUEDA PROHIBIDO CORREGIR ESTE PLANO SIN AUTORIZACION DE ESTA UNIDAD.

ALL DIMENSIONS IN BRACKETS [ ] ARE MILLIMETER; EXPRESSED DIMENSIONS ARE INCHES

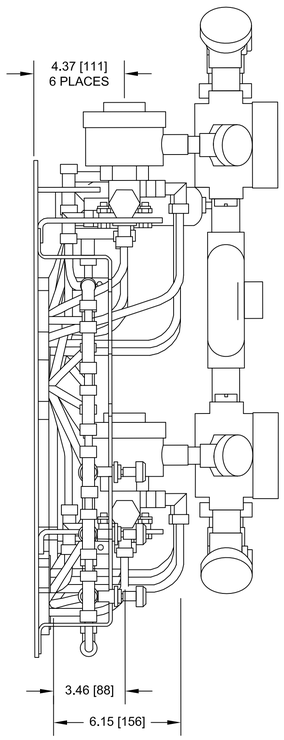

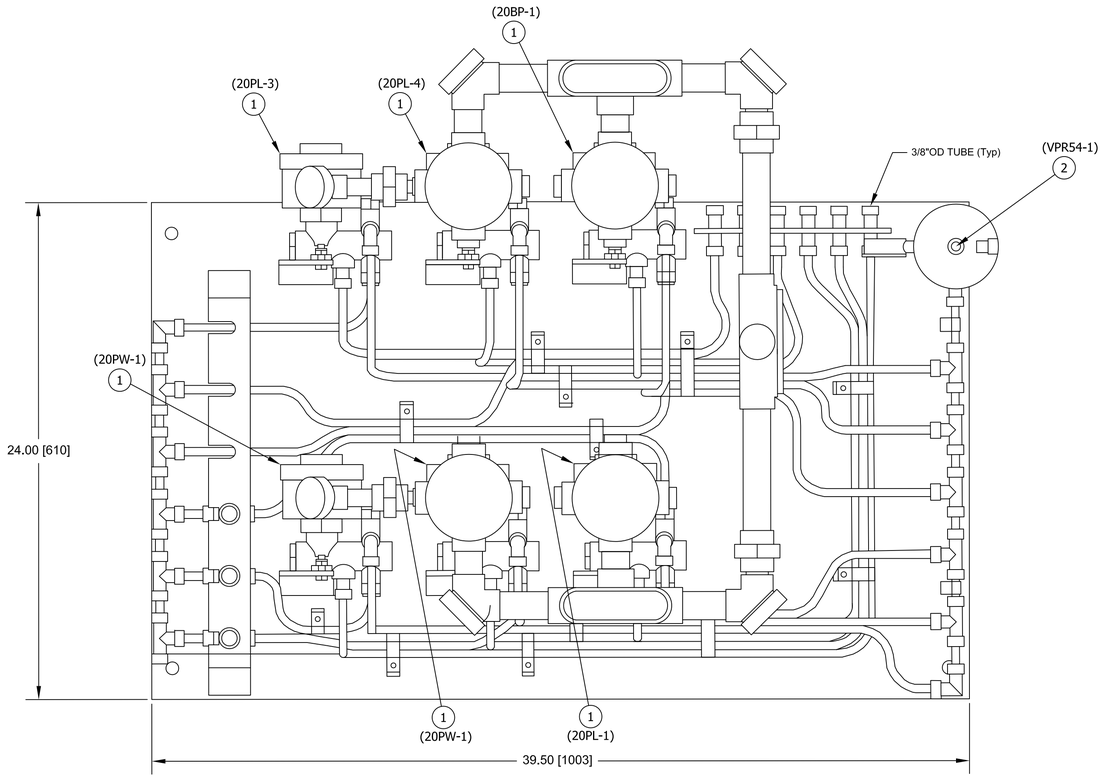

N° DE DOCUMENTO	DESCRIPCIÓN	REV.	FECHA
AGM-02-0204-PLA-E-0058	INTERCONNECTION WIRE DIAGRAM		
AGM-02-0204-PLA-I-0046	DEVICE SUMMARY		

DOCUMENTOS DE REFERENCIA

REV.	FECHA	REVISIONES O MODIFICACIONES	DIBUJO	REVISO	APROBO
0	01/06/11	ISSUED FOR CONSTRUCTION	SAB	CB	TK

REF. FABRICANTE		
REF. FABRICANTE	FABRICANTE	O/C:

DERWICK | ProEnergy SERVICES | CORPOELEC | La Electricidad de Caracas | SENECA

AMPLIACIÓN DE LA CAPACIDAD DE GENERACIÓN Y TRANSPORTE DE ELECTRICIDAD EN LA ISLA DE MARGARITA

FUEL NOZZLE PURGE PANEL ASSEMBLY
DUAL FUEL MOD. UNITS 298034 & 298035
(MLI 0918)

PLANO N°:	REV:		
PROYECTO N°: 409-2956-1			
CALCULO:	PROYECTO:	ESCALA: NONE	PLANO No:
REVISADO: C. Brown	CALCULO:	FECHA: 01/06/11	AGM-02-0204-PLA-I-0019
DIBUJO: S. Boerckel	REVISADO: J. Castillo	DISK. N°	
APROBADO: T. Koontz	DIBUJO:	ESC./PLOTEO:	
ARCHIVO:	APROBADO: M. Monticelli	ARCHIVO:	PAGINA: 1 DE: 3 — REV. 0

F_A1_11 – 841x594mm

LINEA DE CORTE DE COPIA
LINEA DE CORTE DE ORIGINAL

LINEA DE CORTE DE ORIGINAL
LINEA DE CORTE DE COPIA

N° PLANO: AGM-02-0204-PLA-I-0019 | 0

I M P O R T A N T E

ESTE PLANO FUE ELABORADO EN AUTOCAD V.2008
CUALQUIER MODIFICACION REALIZADA EN CAMPO DEBERA SER NOTIFICADO A LA UNIDAD RESPONSABLE.
QUEDA PROHIBIDO CORREGIR ESTE PLANO SIN AUTORIZACION DE ESTA UNIDAD.

ALL DIMENSIONS IN BRACKETS [ ] ARE MILLIMETER, EXPRESSED DIMENSIONS ARE INCHES

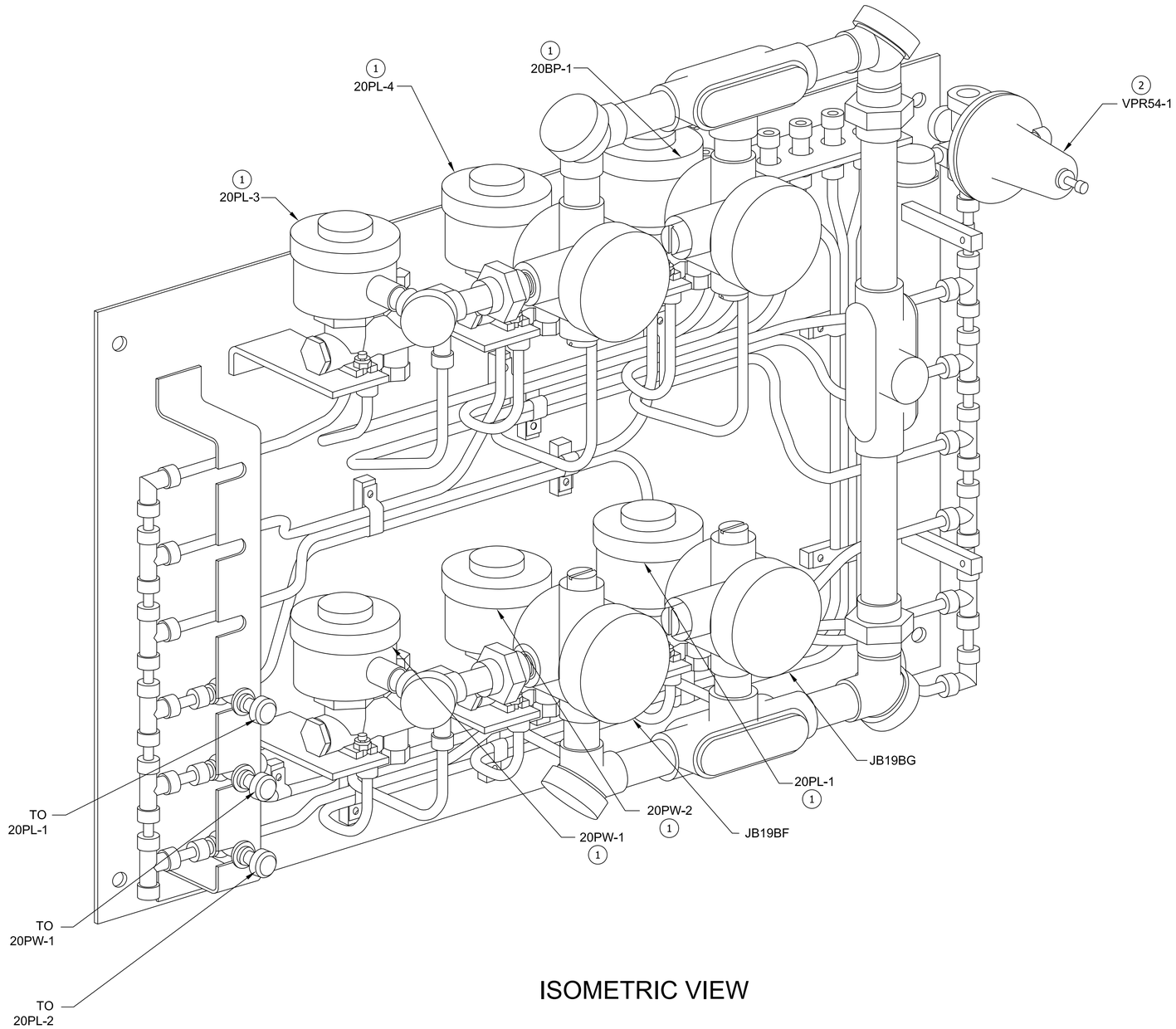

ISOMETRIC VIEW

N° DE DOCUMENTO	DESCRIPCIÓN	REV.	FECHA
AGM-02-0204-PLA-E-0058	INTERCONNECTION WIRE DIAGRAM		
AGM-02-0204-PLA-I-0046	DEVICE SUMMARY		

DOCUMENTOS DE REFERENCIA

REV.	FECHA	REVISIONES O MODIFICACIONES	DIBUJO	REVISO	APROBO
0	01/06/11	ISSUED FOR CONSTRUCTION	SAB	CB	TK

REF. FABRICANTE		
REF. FABRICANTE	FABRICANTE	O/C:

DERWICK ENGINEERING ASSOCIATES CORP. — ProEnergy SERVICES — CORPOELEC CORPORACION ELECTRICA NACIONAL — La Electricidad de Caracas — GERENCIA FUNCIONAL DE INGENIERIA Y PROYECTOS — SENECA

PLANO N°: | REV:

PROYECTO N°: 409-2956-1

FUEL NOZZLE PURGE PANEL ASSEMBLY
DUAL FUEL MOD. UNITS 298034 & 298035
(MLI 0918)

CALCULO:	PROYECTO:	ESCALA: NONE	PLANO No: AGM-02-0204-PLA-I-0019
REVISADO: C. Brown	CALCULO:	FECHA: 01/06/11	
DIBUJO: S. Boerckel	REVISADO: J. Castillo	DISK. N°	
APROBADO: T. Koontz	DIBUJO:	ESC./PLOTEO:	
ARCHIVO:	APROBADO: M. Monticelli	ARCHIVO:	PAGINA: 2 DE: 3 — REV. 0

F_A1_11 – 841x594mm

LINEA DE CORTE DE COPIA
LINEA DE CORTE DE ORIGINAL

LINEA DE CORTE DE ORIGINAL
LINEA DE CORTE DE COPIA

N° PLANO: AGM-02-0204-PLA-I-0019 | 0

IMPORTANTE

ESTE PLANO FUE ELABORADO EN AUTOCAD V.2008
CUALQUIER MODIFICACION REALIZADA EN CAMPO
DEBERA SER NOTIFICADO A LA UNIDAD
RESPONSABLE.
QUEDA PROHIBIDO CORREGIR ESTE PLANO SIN
AUTORIZACION DE ESTA UNIDAD.

ALL DIMENSIONS IN BRACKETS [ ] ARE MILLIMETER; EXPRESSED DIMENSIONS ARE INCHES

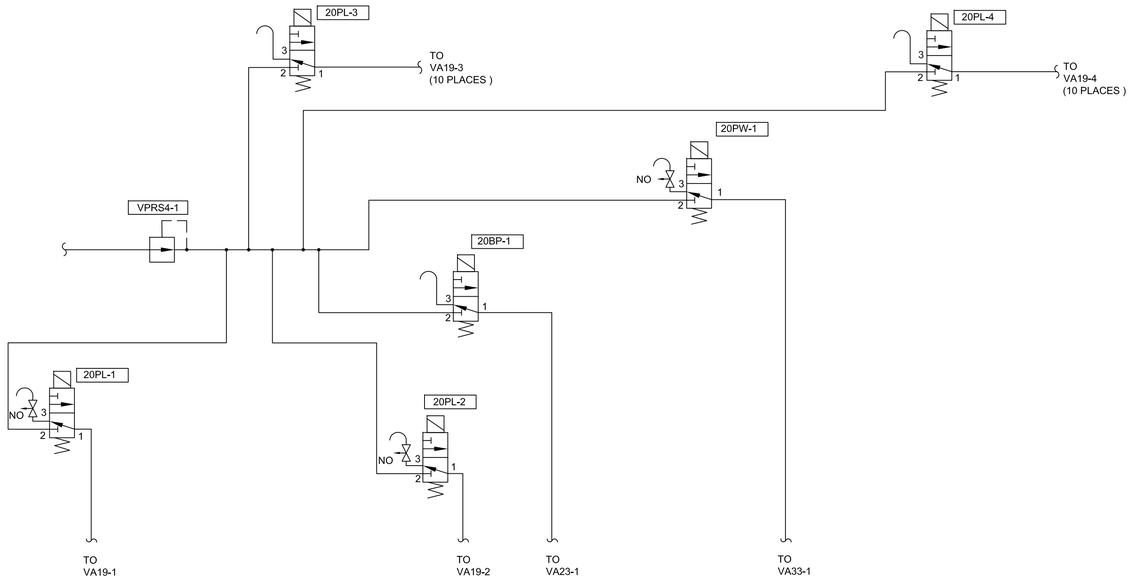

SCHEMATIC DIAGRAM

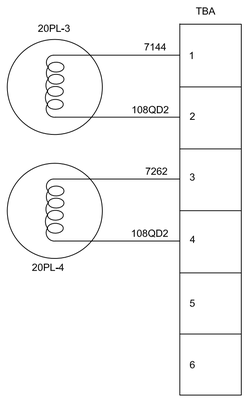

WIRING DIAGRAM FOR DEVICES
20PL-3 & 20PL-4 IN JB19BD

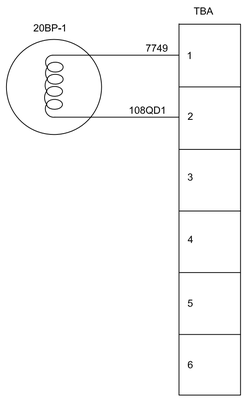

WIRING DIAGRAM FOR DEVICES
20BP-1 IN JB19BE

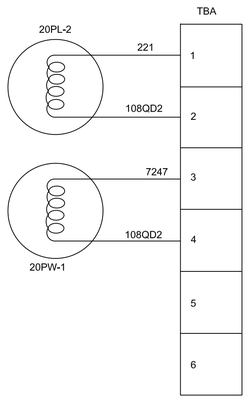

WIRING DIAGRAM FOR DEVICES
20PL-2 & 20PW-1 IN JB19BF

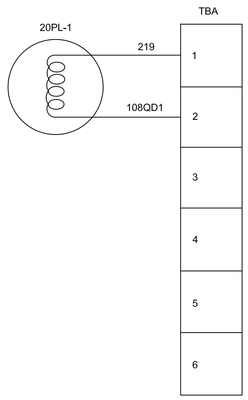

WIRING DIAGRAM FOR DEVICE
20PL-1 IN JB19BG

N° DE DOCUMENTO	DESCRIPCIÓN	REV.	FECHA
AGM-02-0204-PLA-E-0058	INTERCONNECTION WIRE DIAGRAM		
AGM-02-0204-PLA-I-0046	DEVICE SUMMARY		

DOCUMENTOS DE REFERENCIA

REV.	FECHA	REVISIONES O MODIFICACIONES	DIBUJO	REVISO	APROBO
0	01/06/11	ISSUED FOR CONSTRUCTION	SAB	CB	TK

REF. FABRICANTE		
REF. FABRICANTE	FABRICANTE	O/C:

DERWICK Derwick Associates Corp. | ProEnergy Services | CORPOELEC Corporación Eléctrica Nacional | La Electricidad de Caracas | Gerencia Funcional de Ingeniería y Proyectos | SENECA

PLANO N°: | REV:

PROYECTO N°: 409-2956-1

FUEL NOZZLE PURGE PANEL ASSEMBLY
DUAL FUEL MOD. UNITS 298034 & 298035
(MLI 0918)

CALCULO:	PROYECTO:	ESCALA: NONE	PLANO No: AGM-02-0204-PLA-I-0019
REVISADO: C. Brown	CALCULO:	FECHA: 01/06/11	
DIBUJO: S. Boerckel	REVISADO: J. Castillo	DISK. N°	
APROBADO: T. Koontz	DIBUJO:	ESC./PLOTEO:	
ARCHIVO:	APROBADO: M. Monticelli	ARCHIVO:	PAGINA: 3 DE: 3 — REV. 0

F_A1_11 – 841x594mm

LINEA DE CORTE DE COPIA
LINEA DE CORTE DE ORIGINAL

LINEA DE CORTE DE ORIGINAL
LINEA DE CORTE DE COPIA

N° PLANO: AGM-02-0204-PLA-I-0023 | 0

NOTES:

1. FOR MECHANICAL AND INSTRUMENT CONNECTIONS, REFER TO AGM-02-0204-PLA-M-0022.
2. FOR ELECTRICAL CONNECTIONS, REFER TO AGM-02-0204-PLA-E-0001 AND AGM-02-0204-PLA-E-0058.
3. FOR INSTRUMENT SETTINGS, REFER TO AGM-02-0204-PLA-I-0046 (DEVICE SUMMARY MLI 0414).
4. SYSTEM PARAMETERS AND SPECIFICATIONS ARE BASED ON TYPICAL REQUIREMENTS FOR 7EA DLN 1.0 DUAL FUEL SYSTEMS AND CUSTOMER SCOPE OF WORK.

BILL OF MATERIALS

ITEM	QTY.	PART NUMBER	DESCRIPTION
1	1	REF. DWGS: FSBPA-000	BOOSTER PANEL ASSEMBLY
2	1	GP-22HD	GP FILTER PORO-STONE (FA4-1)
3	1	67DFR-239	PRESSURE REGULATOR (VPR68-1)
4	2	HV2708881	SOLENOID VALVE (20AA-1) (20AB-1)

IMPORTANTE

ESTE PLANO FUE ELABORADO EN AUTOCAD V.2008 CUALQUIER MODIFICACION REALIZADA EN CAMPO DEBERA SER NOTIFICADO A LA UNIDAD RESPONSABLE.
QUEDA PROHIBIDO CORREGIR ESTE PLANO SIN AUTORIZACION DE ESTA UNIDAD.

ALL DIMENSIONS IN BRACKETS [ ] ARE MILLIMETER; EXPRESSED DIMENSIONS ARE INCHES

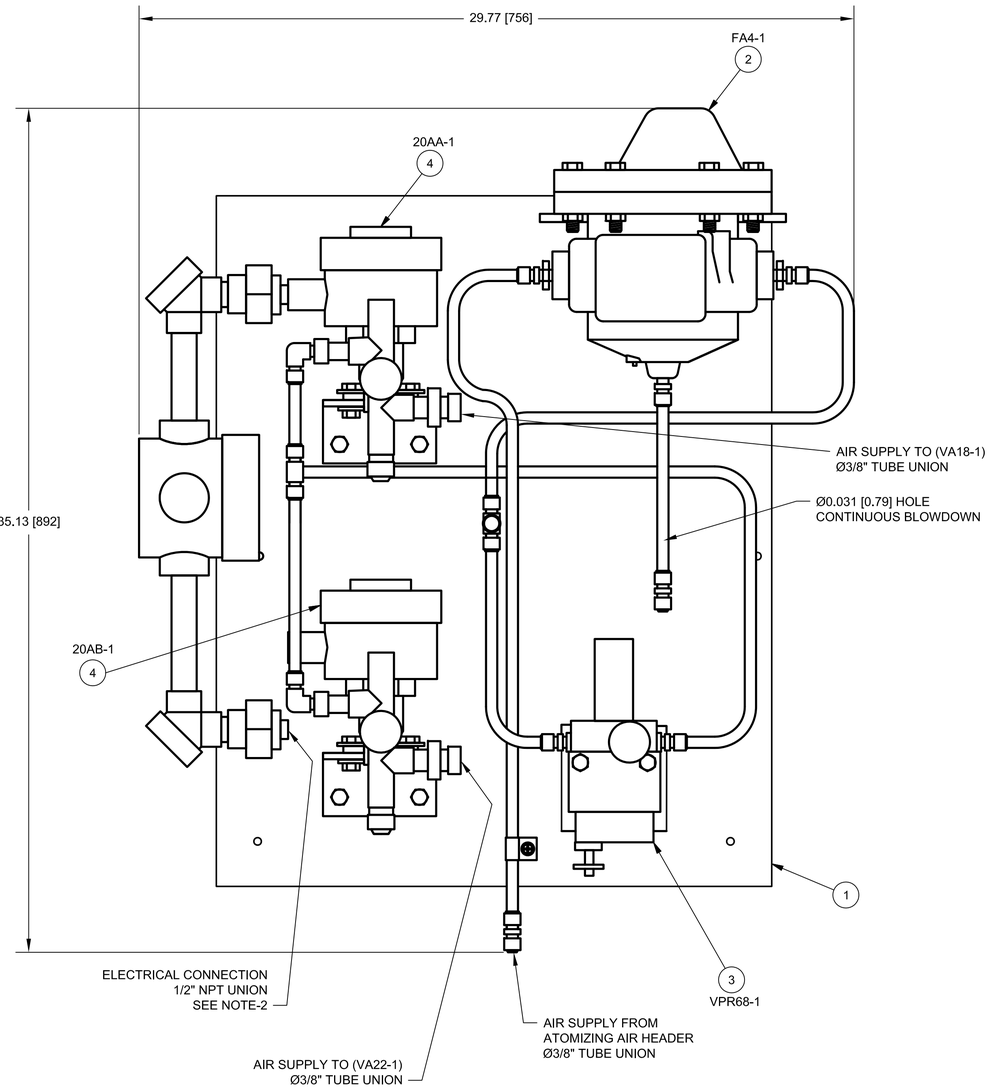

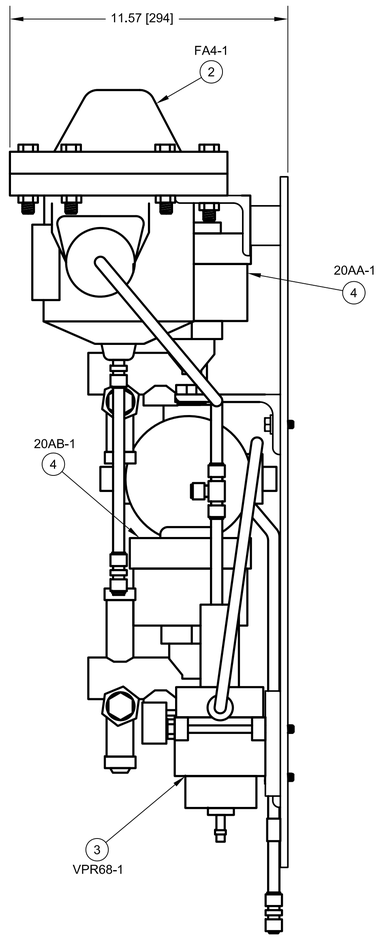

REV.	FECHA	REVISIONES O MODIFICACIONES	DIBUJO	REVISO	APROBO
0	18/07/11	ISSUED FOR FABRICATION	SAB	CB	TK

REF. FABRICANTE		
REF. FABRICANTE	FABRICANTE	O/C:

AGM-02-0204-PLA-P-0053	ATOMIZING AIR P & ID	A	05/03/11
AGM-02-0204-PLA-M-0022	ATOMIZING AIR PIPING ARRANGEMENT – ACCESSORY	0	11/03/11
AGM-02-0204-PLA-I-0046	DEVICE SUMMARY	0	10/03/11
AGM-02-0204-PLA-E-0058	INTERCONNECTION WIRING DIAGRAM	0	11/03/11
AGM-02-0204-PLA-E-0001	CONDUIT ARRANGEMENT, LIQUID FUEL	0	15/03/11
N° DE DOCUMENTO	DESCRIPCIÓN	REV.	FECHA

DOCUMENTOS DE REFERENCIA

DERWICK | ProEnergy SERVICES | CORPOELEC | La Electricidad de Caracas | GERENCIA FUNCIONAL DE INGENIERIA Y PROYECTOS | SENECA

AMPLIACIÓN DE LA CAPACIDAD DE GENERACIÓN Y TRANSPORTE DE ELECTRICIDAD EN LA ISLA DE MARGARITA

ATOMIZING AIR BOOSTER PANEL ARRANGEMENT
DUAL FUEL MOD. UNITS 298034 & 298035
(MLI 0922B)

PLANO N°:	REV:	PROYECTO N°: 409-2956-1	
CALCULO:		PROYECTO:	ESCALA: 1:5
REVISADO: C. Brown		CALCULO:	FECHA: 18/07/11
DIBUJO: S. Boerckel		REVISADO: J. Castillo	DISK. N°
APROBADO: T. Koontz		DIBUJO:	ESC./PLOTEO:
ARCHIVO:		APROBADO: M. Monticelli	ARCHIVO:

PLANO No: AGM-02-0204-PLA-I-0023
PAGINA: 1 DE: 1
REV. 0

F_A1_11 – 841x594mm

LINEA DE CORTE DE COPIA
LINEA DE CORTE DE ORIGINAL

N° PLANO: AGM-02-0204-PLA-M-0003 | 0

IE2

NOTES:

1. FOR DESCRIPTIONS OF GAS TURBINE PACKAGE CONNECTIONS SEE AGM-02-0204-PLA-M-0004 (OUTLINE-GT PACKAGE CONNECTIONS - PIPING NOTES) ML-0314. (THIS LIST IS NOT ALL INCLUSIVE. SEE ML-0302 & 0326. FOR OTHER GAS TURBINE PKG CONNECTIONS)
2. SEE TABLES ON SHEET-3 & 4 FOR LOCATIONS OF GAS TURBINE PKG CONNECTION. "X" DIM'S ARE FROM DATUM-A-. "Y" DIM'S ARE FORM DATUM-B-. DATUMS A & B PASS THRU THE ANCHOR SUPPORT AS SHOWN. "Z" DIM'S ARE FROM DATUM-C-. THE MACHINE BASE LINE.
3. NS & FS DENOTES NEAR SIDE AND FAR SIDE IN REF TO DATUM-B-.
4. SITE CONTRACTOR TO CUT OPENINGS IN OFF-BASE ENCLOSURE WALL FOR INSTALLATION OF ALL PIPING RUNS PENETRATING ENCLOSURE WALL. (THESE CONNECTIONS ARE IDENTIFIED WITH AN ASTRISK (*) ON SHEET 4 NEXT TO THE APPLICABLE CONNECTIONS). SEE ML-1634 FOR TYPICAL METHOD OF SEALING PIPE AT ENCLOSURE OPENINGS WITH FLASHING.
5. SYSTEM PARAMETERS AND SPECIFICATIONS ARE BASED ON GE DRAWING 204D1301 (PROVIDED BY CUSTOMER). INCLUDING REQUIREMENTS FOR DUAL FUEL SYSTEMS PER CUSTOMER SCOPE OF WORK.

IMPORTANTE

ESTE PLANO FUE ELABORADO EN AUTOCAD V.2008 CUALQUIER MODIFICACION REALIZADA EN CAMPO DEBERA SER NOTIFICADO A LA UNIDAD RESPONSABLE.
QUEDA PROHIBIDO CORREGIR ESTE PLANO SIN AUTORIZACION DE ESTA UNIDAD.

ALL DIMENSIONS IN BRACKETS [ ] ARE MILLIMETER, EXPRESSED DIMENSIONS ARE INCHES

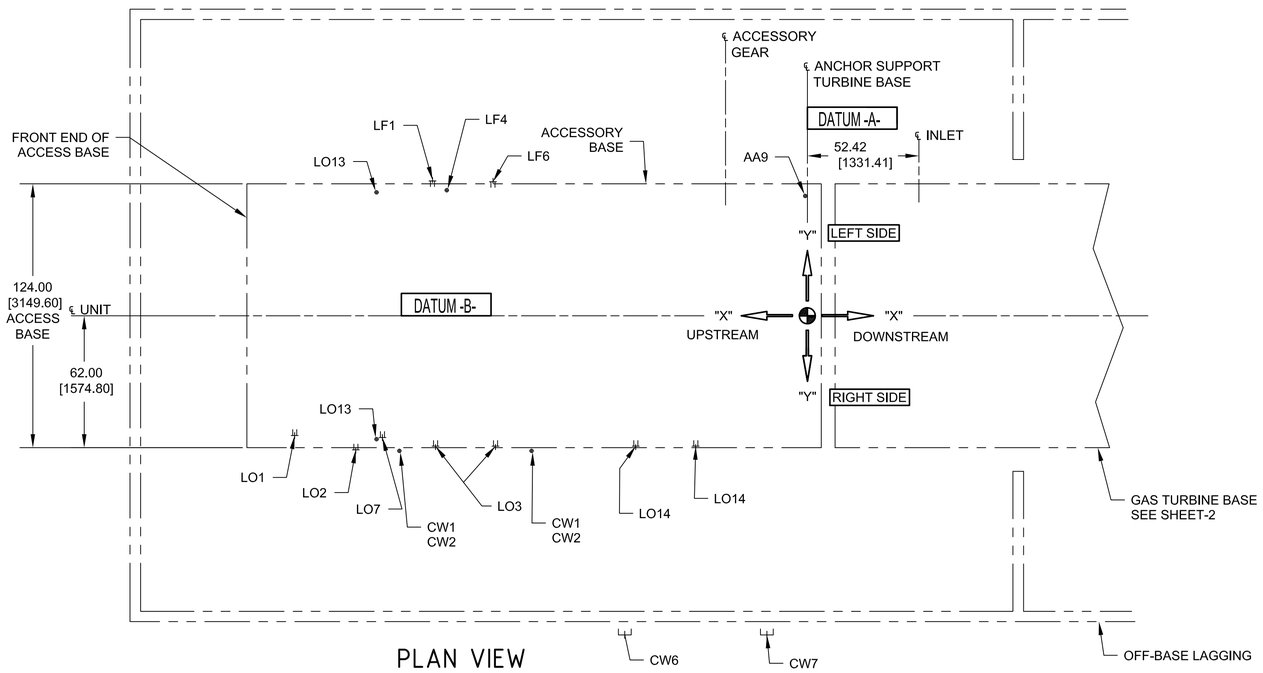

PLAN VIEW

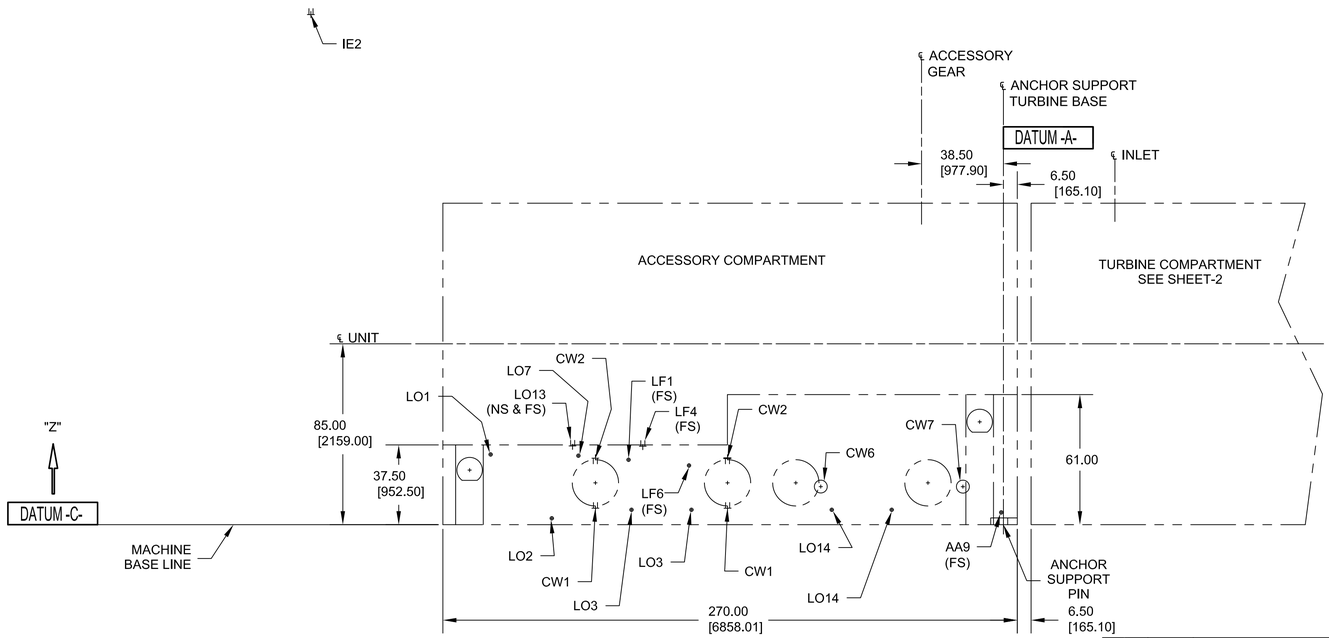

ELEVATION VIEW

REV.	FECHA	REVISIONES O MODIFICACIONES	DIBUJO	REVISO	APROBO
0	08/07/11	ISSUED FOR CONSTRUCTION – SEE NOTE 5	SAB	CB	TK

REF. FABRICANTE		
REF. FABRICANTE	FABRICANTE	O/C:

N° DE DOCUMENTO	DESCRIPCIÓN	REV.	FECHA
ACGM-02-0204-ESP-G-0061	INTERCONNECTION POINTS		
ACGM-02-0204-PLA-M-0004	OUTLINE-GT PACKAGE CONNECTIONS – PIPING (NOTES)		

DOCUMENTOS DE REFERENCIA

DERWICK ASSOCIATES CORP. | ProEnergy SERVICES | CORPOELEC | La Electricidad de Caracas | SENECA

AMPLIACIÓN DE LA CAPACIDAD DE GENERACIÓN Y TRANSPORTE DE ELECTRICIDAD EN LA ISLA DE MARGARITA

PLANO N°: | REV:

OUTLINE-GT PACKAGE CONNECTIONS-PIPING DUAL FUEL MOD. UNITS 298034 & 298035 (MLI 0313)

PROYECTO N°: 409-2956-1

CALCULO:	PROYECTO:	ESCALA: NONE	PLANO No: AGM-02-0204-PLA-M-0003
REVISADO: C. Brown	CALCULO:	FECHA: 08/07/11	
DIBUJO: S. Boerckel	REVISADO: J. Castillo	DISK. N°	
APROBADO: T. Koontz	DIBUJO:	ESC./PLOTEO:	
ARCHIVO:	APROBADO: M. Monticelli	ARCHIVO:	PAGINA: 1 DE: 4 — REV. 0

F_A1_11 – 841x594mm

LINEA DE CORTE DE ORIGINAL
LINEA DE CORTE DE COPIA

N° PLANO: AGM-02-0204-PLA-M-0003 0

IMPORTANTE

ESTE PLANO FUE ELABORADO EN AUTOCAD V.2008 CUALQUIER MODIFICACION REALIZADA EN CAMPO DEBERA SER NOTIFICADO A LA UNIDAD RESPONSABLE.
QUEDA PROHIBIDO CORREGIR ESTE PLANO SIN AUTORIZACION DE ESTA UNIDAD.

ALL DIMENSIONS IN BRACKETS [ ] ARE MILLIMETER; EXPRESSED DIMENSIONS ARE INCHES

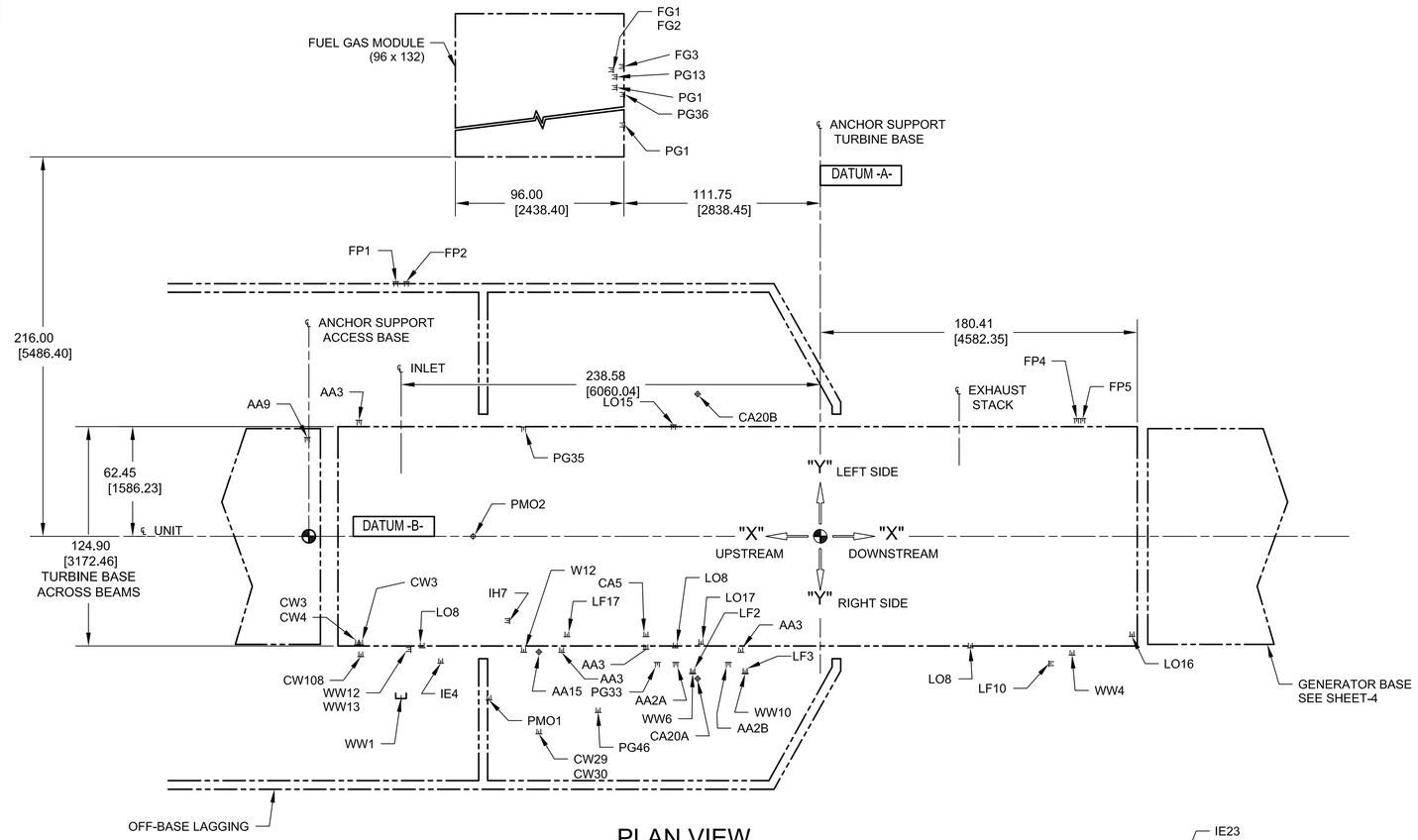

PLAN VIEW

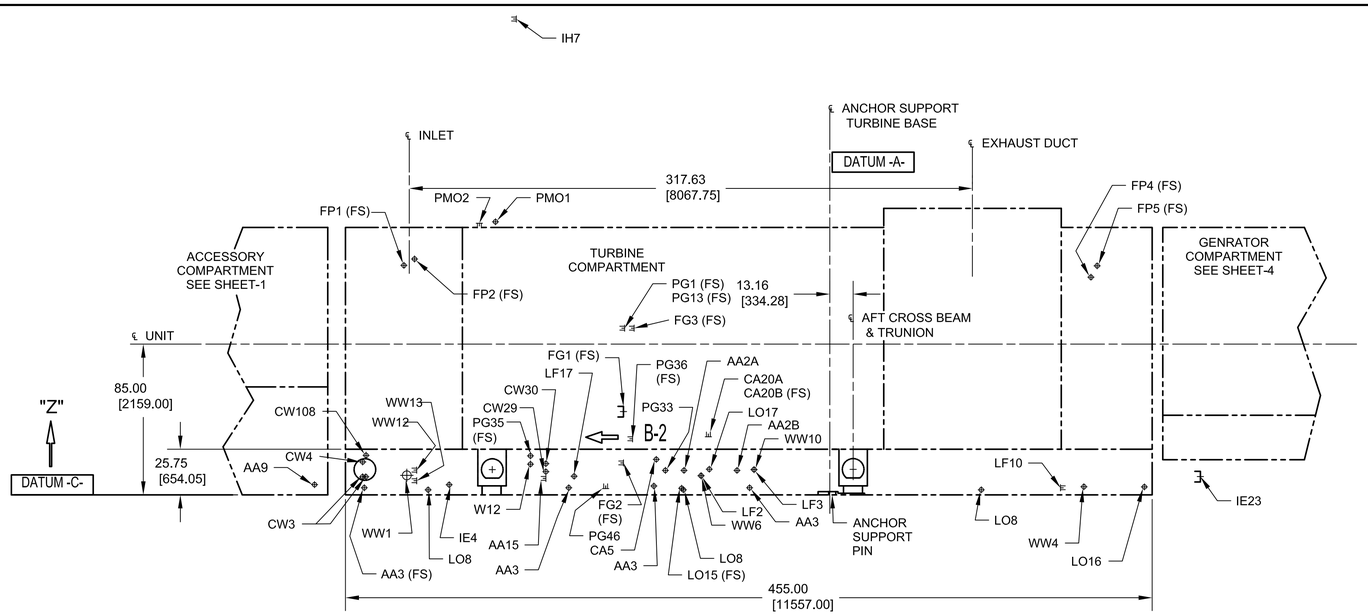

ELEVATION VIEW

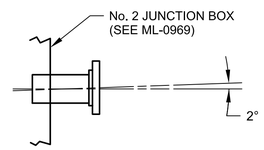

VIEW B-2
(ENLARGED)
(CONN LO10)

N° DE DOCUMENTO	DESCRIPCIÓN	REV.	FECHA
AGM-02-0204-ESP-G-0061	INTERCONNECTION POINTS		
AGM-02-0204-PLA-M-0004	OUTLINE-GT PACKAGE CONNECTIONS - PIPING (NOTES)		

DOCUMENTOS DE REFERENCIA

REV.	FECHA	REVISIONES O MODIFICACIONES	DIBUJO	REVISO	APROBO
0	08/07/11	ISSUED FOR CONSTRUCTION - SEE NOTE:5 (SHT-1)	SAB	CB	TK

REF. FABRICANTE		
REF. FABRICANTE	FABRICANTE	O/C:

DERWICK ASSOCIATES CORP. · ProEnergy SERVICES · CORPOELEC · La Electricidad de Caracas · SENECA

AMPLIACIÓN DE LA CAPACIDAD DE GENERACIÓN Y TRANSPORTE DE ELECTRICIDAD EN LA ISLA DE MARGARITA

OUTLINE-GT PACKAGE CONNECTIONS-PIPING DUAL FUEL MOD. UNITS 298034 & 298035 (MLI 0313)

PLANO N°:	REV:		
PROYECTO N°: 409-2956-1			
CALCULO:	PROYECTO:	ESCALA: NONE	PLANO No: AGM-02-0204-PLA-M-0003
REVISADO: C. Brown	CALCULO:	FECHA: 08/07/11	
DIBUJO: S. Boerckel	REVISADO: J. Castillo	DISK. N°	
APROBADO: T. Koontz	DIBUJO:	ESC./PLOTEO:	
ARCHIVO:	APROBADO: M. Monticelli	ARCHIVO:	PAGINA: 2 DE: 4 REV. 0

F_A1_11 - 841x594mm

LINEA DE CORTE DE COPIA
LINEA DE CORTE DE ORIGINAL

LINEA DE CORTE DE ORIGINAL
LINEA DE CORTE DE COPIA

N° PLANO: AGM-02-0204-PLA-M-0003 / 0

IMPORTANTE

ESTE PLANO FUE ELABORADO EN AUTOCAD V.2008
CUALQUIER MODIFICACION REALIZADA EN CAMPO
DEBERA SER NOTIFICADO A LA UNIDAD
RESPONSABLE.
QUEDA PROHIBIDO CORREGIR ESTE PLANO SIN
AUTORIZACION DE ESTA UNIDAD.

ALL DIMENSIONS IN BRACKETS [ ] ARE MILLIMETER, EXPRESSED DIMENSIONS ARE INCHES

TABLE BELOW REFERS TO CONNECTIONS ON SHEET-1

SCHEM	CONN	"X"	"Y"	"Z"
0420	CW1	-191.75 [-4870]	-63.49 [-1613]	7.75 [167]
	CW1	-129.63 [-3293]	-63.49 [-1613]	7.75 [167]
	CW2	-191.75 [-4870]	-63.49 [-1613]	31.25 [794]
	CW2	-129.63 [-3293]	-63.49 [-1613]	31.25 [794]
	CW6	-85.80 [-2179]	-150.00 [-3810]	17.88 [454]
	CW7	-19.00 [-483]	-150.00 [-3810]	17.88 [454]
0471	IE2 (FS)	-287.05 [-7291]	225.29 [5722]	239.74 [6089]
0416	LO1	-241.00 [-6121]	-56.31 [-1430]	33.00 [838]
	LO2	-212.25 [-5391]	-63.00 [-1600]	3.00 [76]
	LO3	-174.78 [-4439]	-61.31 [-1557]	7.00 [178]
	LO3	-146.60 [-3724]	-61.31 [-1557]	7.00 [178]
	LO7	-199.75 [-5074]	-57.25 -1454]	32.41 [823]
	LO13	-202.50 [-5144]	-58.00 [-1473]	37.00 [940]
	LO13	-202.50 [-5144]	58.00 [1473]	37.00 [940]
	LO14	-80.65 [-2049]	-61.13 [-1557]	7.00 [178]
	LO14	-52.47 [-1333]	-61.13 [-1557]	7.00 [178]

TABLE BELOW REFERS TO CONNECTIONS ON SHEET-2

SCHEM	CONN	"X"	"Y"	"Z"
0417	CA5	-99.24 [-2521]	-57.18 [-1452]	20.00 [508]
	CA20A	-69.85 [-1774]	-81.00 [-2057]	32.75 [832]
	CA20B	-69.85 [-1774]	81.00 [2057]	32.75 [832]
0422	FG1	-117.75 [-2991]	316.00 [8026]	47.00 [1194]
	FG2	-117.75 [-2991]	316.00 [8026]	18.00 [457]
	FG3	-117.75 [-2991]	317.92 [8075]	94.00 [2388]
0426	FP1	-241.59 [-6136]	145.00 [3683]	129.43 [3288]
	FP2	-235.59 [-5984]	145.00 [3683]	133.01 [3378]
	FP4	145.92 [3706]	67.06 [1703]	122.75 [3118]
	FP5	149.42 [3795]	67.06 [1703]	129.17 [3281]
0442	IE4	-216.06 [-5488]	-72.25 [-1835]	5.71 [145]
0471	IE23	209.00 [5309]	-602.47 [-15303]	10.35 [263]

SCHEM	CONN	"X"	"Y"	"Z"
0432	IH7	-176.84 [-4492]	-48.06 [1221]	268.34 [6816]
	LO8	-226.58 [-5755]	-63.44 [-1611]	2.85 [72]
0416	LO8	-82.58 [-2098]	-63.44 [-1611]	2.85 [72]
	LO8	85.42 [2170]	-63.44 [-1611]	2.85 [72]
	LO15	-83.58 [-2123]	-63.44 [-1611]	3.72 [94]
0416	LO16	177.42 [4506]	-57.01 [-1448]	4.50 [114]
	LO17	-67.99 [1727]	-61.43 [-1560]	14.47 [367]
0477	PG36	-111.25 [-2826]	302.00 [7671]	31.75 [806]
0492	PMO1	-188.58 [-4790]	-93.20 [-2367]	154.00 [3912]
	PMO2	-197.68 [-5021]	0.00	153.19 [3891]
0462	W12	-168.84 [-4289]	-66.00 [1676]	17.30 [439]
0442	WW1	-238.58 [-6060]	-92.38 [-2346]	11.00 [279]
	WW4	143.32 [3640]	-67.62 [-1717]	4.58 [116]
	WW6	-72.66 [-1846]	-78.27 [-1988]	10.77 [274]
	WW10	-42.76 [-1086]	-78.27 [-1988]	14.24 [362]
	WW12	-233.03 [-5919]	-64.44 [-1637]	13.96 [354]
	WW13	-233.03 [-5919]	-64.44 [-1637	7.96 [202]

TABLE BELOW REFERS TO CUSTOMER CONNECTIONS DATUM POINT SHEET 2

SCHEM	CONN	"X"	"Y"	"Z"
0420	CW3	-261.5 [-6642]	-62.0 [-1575]	10.0 [254]
	CW3	-263.5 [-6693]	-62.0 [-1575]	10.0 [254]
	CW4	-263.5 [-6693]	-62.0 [-1575]	18.5 [470]
	CW29	-160.0 [-4064]	-112.5 [-2858]	13.08 [332]
	CW30	-160.0 [-4064]	-112.5 [-2858]	17.5 [445]
	CW108	-261.5 [-6642]	-68.5 [-1740]	22.0 [559]
0424	LF1	-467.0 [-11862]	63.5 [1613]	30.5 [775]
	LF4	-460.5 [-11697]	59.0 [1499]	37.5 [953]
	LF6	-439.0 [-11151]	63.0 [1600]	28.0 [711]
	LF2	-72.5 [-1842]	-78.0 [-1981]	11.0 [279]
	LF3	-42.5 [-1080]	-78.0 [-1981]	14.5 [368]
	LF10	130.0 [3302]	-72.5 [-1842]	4.0 [102]
	LF17	-144.0 [-3658]	-57.0 [-1448]	10.5 [267]
0425	AA3	-45.0 [-1143]	-66.0 [-1676]	4.0 [102]
	AA3	-147.0 [-3734]	-66.0 [-1676]	4.0 [102]
	AA3	-99.0 [-2515]	-64.0 [-1626]	5.0 [127]
	AA3	-262.5 [-6668]	66.0 [1676]	4.0 [102]
	AA9	-292.0 [-7417]	56.0 [1422]	6.0 [152]
0477	AA15	-160.15 [-4068]	-65.82 [-1672]	9.27 [235]
	AA2B	-52.36 [-1330]	-71.77 [-1823]	13.79 [350]
	AA2A	-82.26 [-2089]	-71.77 [-1823]	13.79 [350]
	PG1	-115.75 [-2940]	305.92 [7770]	94.00 [2388]
	PG13	-115.75 [-2940]	311.92 [7923]	94.00 [2388]
	PG33	-92.75 [-2356]	-71.77 [-1832]	13.79 [350]
	PG35	-168.84 [-4289]	62.22 [1580]	22.00 [599]
	PG46	-126.46 [-3212]	-100.32 [-2548]	3.55 [90]

REV.	FECHA	REVISIONES O MODIFICACIONES	DIBUJO	REVISO	APROBO
0	08/07/11	ISSUED FOR CONSTRUCTION – SEE NOTE:5 (SHT–1)	SAB	CB	TK

REF. FABRICANTE		
REF. FABRICANTE	FABRICANTE	O/C:

N° DE DOCUMENTO	DESCRIPCIÓN	REV.	FECHA
AGM–02–0204–ESP–G–0061	INTERCONNECTION POINTS		
AGM–02–0204–PLA–M–0004	OUTLINE–GT PACKAGE CONNECTIONS – PIPING (NOTES)		

DOCUMENTOS DE REFERENCIA

DERWICK Associates Corp. / ProEnergy SERVICES / CORPOELEC / La Electricidad de Caracas / GERENCIA FUNCIONAL DE INGENIERÍA Y PROYECTOS / SENECA

AMPLIACIÓN DE LA CAPACIDAD DE GENERACIÓN Y TRANSPORTE DE ELECTRICIDAD EN LA ISLA DE MARGARITA

OUTLINE–GT PACKAGE CONNECTIONS–PIPING
DUAL FUEL MOD. UNITS 298034 & 298035
(MLI 0313)

PLANO N°: REV:
PROYECTO N°: 409–2956–1

CALCULO:	PROYECTO:	ESCALA: NONE	PLANO No: AGM–02–0204–PLA–M–0003
REVISADO: C. Brown	CALCULO:	FECHA: 08/07/11	
DIBUJO: S. Boerckel	REVISADO: J. Castillo	DISK. N°	
APROBADO: T. Koontz	DIBUJO:	ESC./PLOTEO:	
ARCHIVO:	APROBADO: M. Monticelli	ARCHIVO:	PAGINA: 3 DE: 4 REV. 0

F_A1_11 – 841x594mm

LINEA DE CORTE DE COPIA
LINEA DE CORTE DE ORIGINAL

LINEA DE CORTE DE ORIGINAL
LINEA DE CORTE DE COPIA

N° PLANO: AGM-02-0204-PLA-M-0003 0

IMPORTANTE

ESTE PLANO FUE ELABORADO EN AUTOCAD V.2008
CUALQUIER MODIFICACION REALIZADA EN CAMPO DEBERA SER NOTIFICADO A LA UNIDAD RESPONSABLE.
QUEDA PROHIBIDO CORREGIR ESTE PLANO SIN AUTORIZACION DE ESTA UNIDAD.

ALL DIMENSIONS IN BRACKETS [ ] ARE MILLIMETER. EXPRESSED DIMENSIONS ARE INCHES

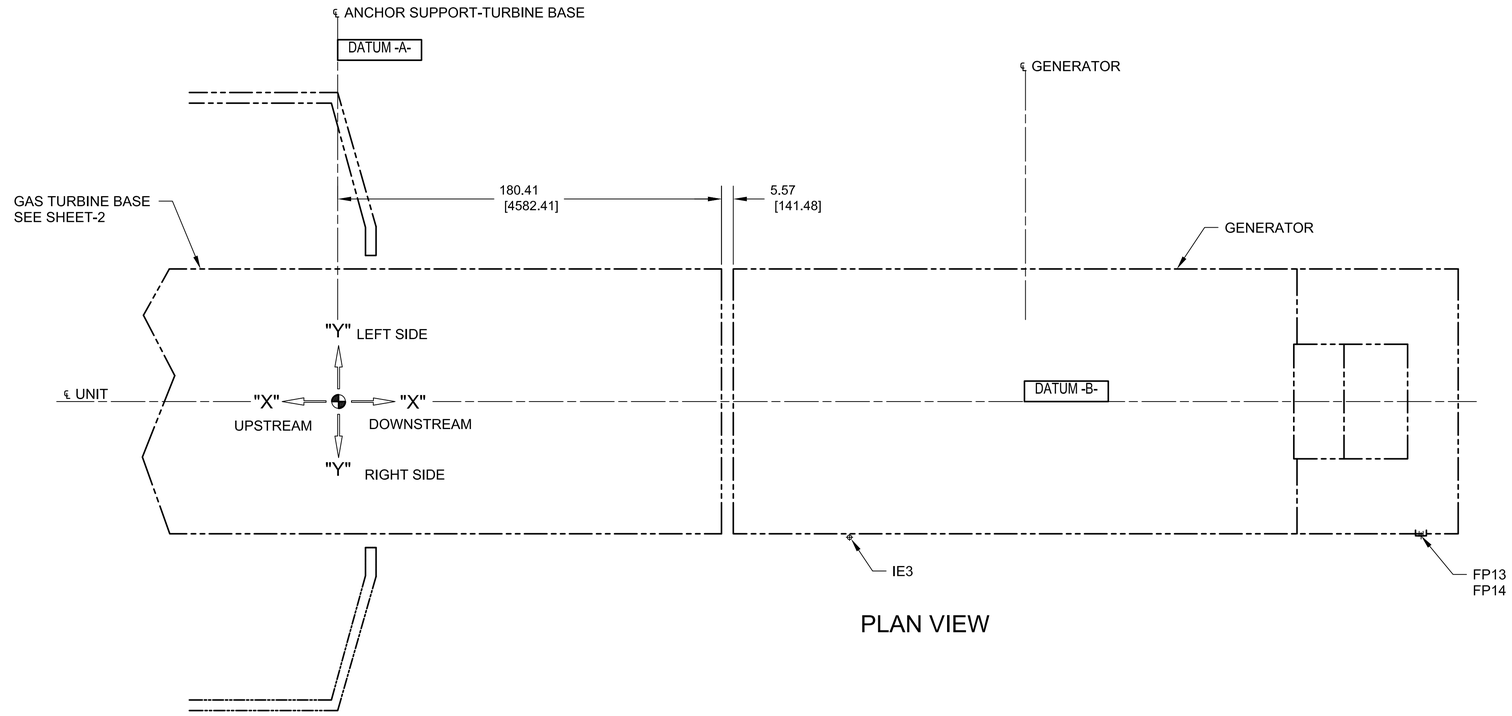

PLAN VIEW

SCHEM	CONN	"X"	"Y"	"Z"
0471	IE3	240.17 [6100]	-63.80 [-1621]	182.50 [4636]
0471	FP13	508.86 [12925]	-63.10 [-1603]	70.00 [1778]
0471	FP14	508.86 [12925]	-63.28 [-1607]	73.00 [1854]

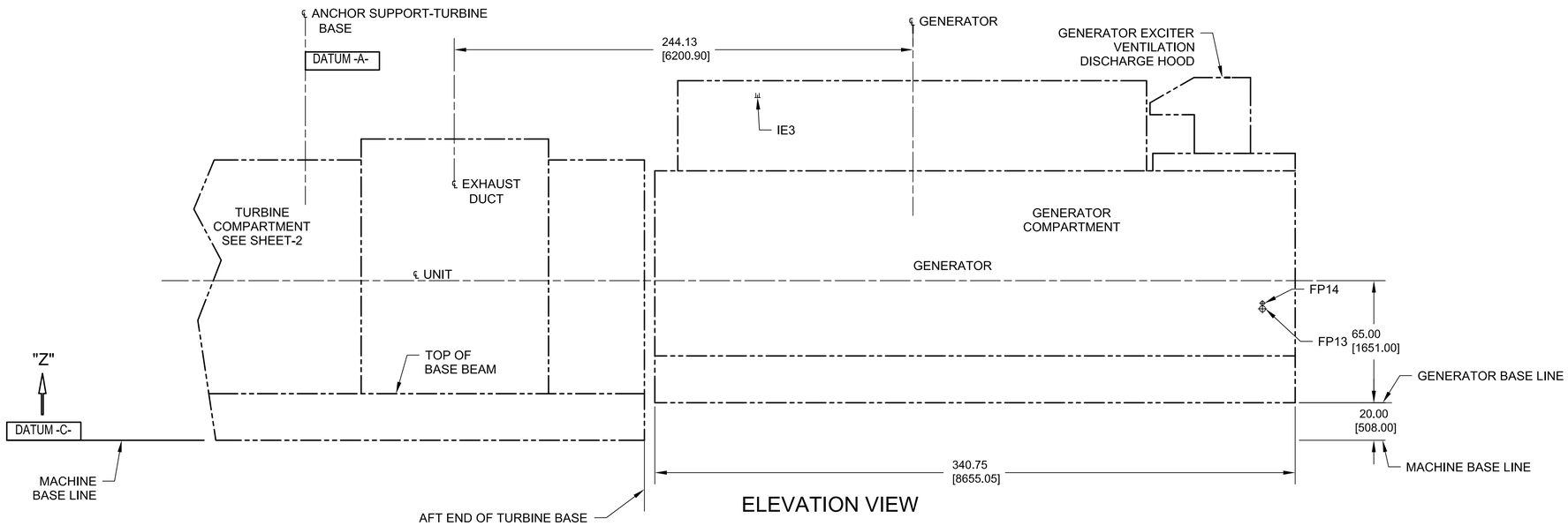

ELEVATION VIEW

REV.	FECHA	REVISIONES O MODIFICACIONES	DIBUJO	REVISO	APROBO
0	08/07/11	ISSUED FOR CONSTRUCTION – SEE NOTE:5 (SHT-1)	SAB	CB	TK

REF. FABRICANTE		
REF. FABRICANTE	FABRICANTE	O/C:

N° DE DOCUMENTO	DESCRIPCIÓN	REV.	FECHA
AGM-02-0204-ESP-G-0061	INTERCONNECTION POINTS		
AGM-02-0204-PLA-M-0004	OUTLINE-GT PACKAGE CONNECTIONS – PIPING (NOTES)		

DOCUMENTOS DE REFERENCIA

DERWICK ASSOCIATES CORP. ProEnergy SERVICES CORPOELEC La Electricidad de Caracas GERENCIA FUNCIONAL DE INGENIERIA Y PROYECTOS SENECA

AMPLIACIÓN DE LA CAPACIDAD DE GENERACIÓN Y TRANSPORTE DE ELECTRICIDAD EN LA ISLA DE MARGARITA

OUTLINE-GT PACKAGE CONNECTIONS-PIPING
DUAL FUEL MOD. UNITS 298034 & 298035
(MLI 0313)

PLANO N°: REV:
PROYECTO N°: 409-2956-1

CALCULO:	PROYECTO:	ESCALA: NONE	PLANO No:
REVISADO: C. Brown	CALCULO:	FECHA: 08/07/11	AGM-02-0204-PLA-M-0003
DIBUJO: S. Boerckel	REVISADO: J. Castillo	DISK. N°	
APROBADO: T. Koontz	DIBUJO:	ESC./PLOTEO:	
ARCHIVO:	APROBADO: M. Monticelli	ARCHIVO:	PAGINA: 4 DE: 4 REV. 0

F_A1_11 – 841x594mm

LINEA DE CORTE DE COPIA
LINEA DE CORTE DE ORIGINAL

N° PLANO:	
AGM-02-0204-PLA-M-0004	0

IMPORTANTE

ESTE PLANO FUE ELABORADO EN AUTOCAD V.2008
CUALQUIER MODIFICACION REALIZADA EN CAMPO DEBERA SER NOTIFICADO A LA UNIDAD RESPONSABLE.
QUEDA PROHIBIDO CORREGIR ESTE PLANO SIN AUTORIZACION DE ESTA UNIDAD.

ALL DIMENSIONS IN BRACKETS [ ] ARE MILLIMETER, EXPRESSED DIMENSIONS ARE INCHES

0

NOTES:

1. ORIGINAL GE DRAWING 362A2940 (PROVIDED BY CUSTOMER) MODIFIED TO INCLUDE CONNECTIONS PONITS FOR DUAL FUEL APPLICATION, PER CUSTOMER SCOPE OF WORK.

NOTES:
OUTLINE-GT PACKAGE CONNECTION OUTLINE-PIPING

N° DE DOCUMENTO	DESCRIPCIÓN	REV.	FECHA
AGM-02-0204-ESP-G-0061	INTERCONNECTION POINTS		
AGM-02-0204-PLA-M-0003	OUTLINE-GT PACKAGE CONNECTION - PIPING		

DOCUMENTOS DE REFERENCIA

REV.	FECHA	REVISIONES O MODIFICACIONES	DIBUJO	REVISO	APROBO
0	08/07/11	ISSUED FOR CONSTRUCTION	SB	CB	TK

REF. FABRICANTE		
REF. FABRICANTE	FABRICANTE	O/C:

DERWICK ASSOCIATES CORP. — ProEnergy SERVICES — CORPOELEC — La Electricidad de Caracas — GERENCIA FUNCIONAL DE INGENIERIA Y PROYECTOS — SENECA

AMPLIACIÓN DE LA CAPACIDAD DE GENERACIÓN Y TRANSPORTE DE ELECTRICIDAD EN LA ISLA DE MARGARITA

OUTLINE-GT PACKAGE CONNECTIONS-PIPING (NOTES)
DUAL FUEL MOD. UNITS 298034 & 298035
(MLI 0314)

PLANO N°:	REV:		
PROYECTO N°: 409-2956-1			
CALCULO:	PROYECTO:	ESCALA: NONE	PLANO No: AGM-02-0204-PLA-M-0004
REVISADO: C. Brown	CALCULO:	FECHA: 08/07/11	
DIBUJO: S. Boerckel	REVISADO: J. Castillo	DISK. N°	
APROBADO: T. Koontz	DIBUJO:	ESC./PLOTEO:	
ARCHIVO:	APROBADO: M. Monticelli	ARCHIVO:	PAGINA: 1 DE: 7 — REV. 0

F_A4_11 - 210x297mm

ALL DIMENSIONS IN BRACKETS [ ] ARE MILLIMETER; EXPRESSED DIMENSIONS ARE INCHES

GAS TURBINE PACKAGE CONNECTIONS

PURCHASER CONNECTS AT THESE POINTS. ACCESSORY BASE WILL EXPAND FROM IT'S FIXED END A MAXIMUM OF .30 INCHES FORWARD AND A MAXIMUM OF .08 INCHES LATERALLY. TURBINE BASE WILL EXPAND FROM ITS FIXED POINT A MAXIMUM OF .35 INCHES IN EACH DIRECTION AND A MAXIMUM OF .13 INCHES LATERALLY. ALL DEVICES AND EQUIPMENT MOUNTED ON ACCESSORY AND TURBINE BASES WILL MOVE A PROPORTIONATE AMOUNT. THEREFORE, PURCHASER'S PIPING SHOULD PERMIT THIS EXPANSION AND NOT PUT A STRAIN ON THE MACHINERY. SPRING HANGERS, COMPANION FLANGES, BOLTS, STUDS, NUTS AND GASKETS FOR PURCHASER CONNECTIONS ARE NOT FURNISHED.

IN ADDISTION TO THESE CONNECTIONS, FIELD AND BASE INTERCONNECTING PIPING, MAY AFFECT THE DESIGN OF THE PURCHASER'S PIPING. FOR INFORMATION CONCERNING THESE PIPING LOCATIONS, SEE ML ITEMS A184 (PIPING ARRANGEMENT – FIELD INTERCONNECT), AND 969A, (PIPING ARRANGEMENT – BASE INTERCONNECT).

FOR THE FUEL GAS AND WATER WASH SYSTEMS SUPPLIED ON THIS UNIT, THE INSTALLERS INTERCONNECTING PIPING DOWNSTREAM OF THE CUSTOMER'S LAST FILTER/SEPARATOR TO THE PACKAGE CONNECTION ON THE TURBINE OR ACCESSORY MODULE MUST BE AUSTENITIC STAINLESS STEEL.

SITE CONTRACTOR TO CUT OPENINGS IN OFF-BASE ENCLOSURE WALL FOR INSTALLATION OF FIELD RUN PIPING (THESE CONNECTIONS ARE IDENTIFIED WITH AN ASTERISK (*) NEXT TO THE APPLICABLE CONNECTION). SEE ML ITEM 1634 FOR TYPICAL METHOD OF SEALING PIPE AT ENCLOSURE OPENINGS WITH FLASHINGS (SUPPLIED).

FOR FIELD FLUSH OF LUBE OIL PIPING REFER TO INSTRUCTIONS UNDER ML A125. CLEAN OTHER EXTERNAL PIPING IN ACCORDANCE WITH STEEL STRUCTURE PAINTING COUNCIL STANDARD SSPC-SP-8 (WHICH DEFINES PICKLING OF PIPE).

PURCHASER CONNECTS AT THE POINTS LISTED BELOW. FOR LOCATIONS OF GAS TURBINE PACKAGE CONNECTIONS, SEE AGM-02-0204-PLA-M-0003 (ML ITEM 0313).

CA5 — 1.00 (1") CS FEMALE NPT – PLUGGED (1 CONN.) – AIR SUPPLY FOR SELF-CLEANING FILTERS. (SH. 2)

CA20 (A/B) — .75 (3/4") 304L SST FEMALE NPT – PLUGGED (2 CONN.) – LOW POINT DRAIN FOR INLET AIR HEATING PIPING. (SH. 2)

CW1 — .75 (3/4") CS FEMALE NPT – PLUGGED (2 CONN.) – LUBE OIL HEAT EXCHANGER WATER HEAD DRAIN. (SH. 1)

CW2 — .75 (3/4") CS FEMALE NPT – PLUGGED (2 CONN.) – LUBE OIL HEAT EXCHANGER WATER HEAD VENT. (SH. 1)

REV.	FECHA	REVISIONES O MODIFICACIONES	DIBUJO	REVISO	APROBO
0	08/07/11	ISSUED FOR CONSTRUCTION, SEE NOTE:1, SHT-1	SB	CB	TK

REF. FABRICANTE		
REF. FABRICANTE	FABRICANTE	O/C:

DERWICK ASSOCIATES CORP. — ProEnergy SERVICES — CORPOELEC — La Electricidad de Caracas — GERENCIA FUNCIONAL DE INGENIERIA Y PROYECTOS — SENECA

AMPLIACIÓN DE LA CAPACIDAD DE GENERACIÓN Y TRANSPORTE DE ELECTRICIDAD EN LA ISLA DE MARGARITA

OUTLINE–GT PACKAGE CONNECTIONS–PIPING (NOTES)
DUAL FUEL MOD. UNITS 298034 & 298035
(MLI 0314)

PLANO N°:	REV:		
PROYECTO N°: 409-2956-1			
CALCULO:	PROYECTO:	ESCALA: NONE	PLANO No: AGM-02-0204-PLA-M-0004
REVISADO: C. Brown	CALCULO:	FECHA: 08/07/11	
DIBUJO: S. Boerckel	REVISADO: J. Castillo	DISK. N°	
APROBADO: T. Koontz	DIBUJO:	ESC./PLOTEO:	
ARCHIVO:	APROBADO: M. Monticelli	ARCHIVO:	PAGINA: 2 DE: 7 REV. 0

ALL DIMENSIONS IN BRACKETS [ ] ARE MILLIMETER; EXPRESSED DIMENSIONS ARE INCHES

*CW6 6.00 (6”) 150# CS RAISED FACE FLANGE (1 CONN.) – COOLING WATER INLET TO LUBE OIL COOLER AND TURBINE SUPPORT LEGS. (SH. 1)

*CW7 6.00 (6”) 150# CS RAISED FACE FLANGE (1 CONN.) – COOLING WATER OUTLET FROM LUBE OIL COOLER AND TURBINE SUPPORT LEGS. (SH. 1)

FG1 6.00 (6”) 300# SST RAISED FACE FLANGE (1 CONN.) – FUEL GAS INLET. (SH. 2)

FG2 2.00 (2”) 300# SST RAISED FACE FLANGE (1 CONN.) – FUEL GAS STRAINER BLOWDOWN. (TO BE VENTED TO A SAFE AREA). (SH. 2)

FG3 1.00 (1”) CS 304 SST TUBE (1 CONN.)-GAS COMPARTMENT VALVE VENT. (SH. 2)

*FP1 2.00 (2”) CS FEMALE NPT (1 CONN.) – INITIAL DISCHARGE FOR FIRE PROTECTION SYSTEM, ACCESSORY AND TURBINE COMPARTMENTS. FOR PIPING REQUIREMENTS BETWEEN SKID AND ACCESSORY BASE, SEE NOTES DRAWING ON ML ITEM 0326. (SH. 2)

*FP2 .50 (1/2”) CS FEMALE NPT (1 CONN.) – EXTENDED DISCHARGE FOR FIRE PROTECTION SYSTEM, ACCESSORY AND TURBINE COMPARTMENTS. FOR PIPING REQUIREMENTS BETWEEN SKID AND ACCESSORY BASE, SEE NOTES DRAWING ON ML ITEM 0326. (SH. 2)

FP4 1.50 (1-1/2”) CS FEMALE NPT (1 CONN.) – INITIAL DISCHARGE FOR FIRE PROTECTION SYSTEM LOAD COMPARTMENT AND NO. 3 BEARING TUNNEL. FOR PIPING REQUIREMENTS BETWEEN SKID AND TURBINE BASE, SEE NOTES DRAWING ON ML ITEM 0326. (SH. 2)

FP5 .50 (1/2”) CS FEMALE NPT (1 CONN.) – EXTENDED DISCHARGE FOR FIRE PROTECTION SYSTEM LOAD COMPARTMENT AND NO. 3 BEARING TUNNEL. FOR PIPING REQUIREMENTS BETWEEN SKID AND TURBINE BASE, SEE NOTES DRAWING ON ML ITEM 0326. (SH. 2)

FP13 .50 (1/2”) CS FEMALE NPT (1 CONN.) - INITIAL DISCHARGE – GENERATOR COLLECTOR COMPARTMENT. (SH. 4)

FP14 .75 (3/4”) CS FEMALE NPT (C CONN.) – EXTENDED DISCHARGE – GENERATOR COLLECTOR COMPARTMENT. (SH. 4)

IE2 1.50 (1-1/2”) GALV CS FEMALE NPT (1 CONN.) – AIR INLET TO GAS TURBINE SELF-CLEANING FILTER COMPARTMENT. (SH. 1)

IE3 1.00 (1”) CS NPT (1 CONN.) – COMPRESSED AIR INLET FOR GENERATOR SELF- CLEANING FILTERS. (SH. 4)

REV.	FECHA	REVISIONES O MODIFICACIONES	DIBUJO	REVISO	APROBO
0	08/07/11	ISSUED FOR CONSTRUCTION, SEE NOTE:1, SHT-1	SB	CB	TK

REF. FABRICANTE		
REF. FABRICANTE	FABRICANTE	O/C:

DERWICK | ProEnergy SERVICES | CORPOELEC | La Electricidad de Caracas | GERENCIA FUNCIONAL DE INGENIERIA Y PROYECTOS | SENECA

AMPLIACIÓN DE LA CAPACIDAD DE GENERACIÓN Y TRANSPORTE DE ELECTRICIDAD EN LA ISLA DE MARGARITA

OUTLINE–GT PACKAGE CONNECTIONS–PIPING (NOTES)
DUAL FUEL MOD. UNITS 298034 & 298035
(MLI 0314)

PLANO N°:	REV:		
PROYECTO N°: 409-2956-1			
CALCULO:	PROYECTO:	ESCALA: NONE	PLANO No: AGM-02-0204-PLA-M-0004
REVISADO: C. Brown	CALCULO:	FECHA: 08/07/11	
DIBUJO: S. Boerckel	REVISADO: J. Castillo	DISK. N°	
APROBADO: T. Koontz	DIBUJO:	ESC./PLOTEO:	
ARCHIVO:	APROBADO: M. Monticelli	ARCHIVO:	PAGINA: 3 DE: 7 REV. 0

F_A4_11 – 210x297mm

IE4 1.00 (1”) CS FEMALE NPT VALVE – PLUGGED (1 CONN.) – INLET PLENUM DRAIN. THIS LINE MUST HAVE A SHUT-OFF VALVE AND, IF REQUIRED, BE HEAT TRACED TO PREVENT FREEZING IN THE WINTER. (SEE WATER WASH PIPING SCHEMATIC DIAGRAM, ML ITEM 0442). (SH. 2)

IE23 6.00 (6”) CS MALE NPT – CAPPED (1 CONN.) – EXHAUST STACK RAINWATER DRAIN. (SH. 2)

IH7 .50 (1/2”) SST NPT AIR SUPPLY TO VA20-1 FOR CONTROL (1 CONN._ - DRY INSTRUMENT AIR FROM CUSTOMER. (SH. 2: B-6, C-6)

LO1 2.00 (2”) CS FEMALE NPT – PLUGGED (1 CONN.) – LUBE OIL TANK FILL. (SH. 1)

LO2 2.00 (2”) CS FEMALE NPT – PLUGGED (1 CONN.) – LUBE OIL TANK DRAIN. (SH. 1)

LO3 .75 (3/4”) 316 SST FEMALE NPT MANUALLY OPERATED BALL VALVE – PLUGGED (2 CONN.) – LUBE OIL HEAT EXCHANGER SHELL DRAIN (LUBE OIL). (IT IS RECOMMENDED THAT THESE VALVES BE PADLOCKED IN CLOSED POSITION WHEN NOT IN USE). (SH. 1)

LO7 .50 (1/2”) CS FEMALE NPT – PLUGGED (1 CONN.) – GAUGE CABINET DRAIN. (SH. 1)

LO8 1.50 (1-1/2”) CS FEMALE NPT – PLUGGED (3 CONN.) – TURBINE BASE SUMP DRAINS, NORMALLY NO FLOW. FLOW OF LUBE OIL, FUEL OIL, OR WATER WOULD OCCUR ONLY IN THE EVENT OF COMPONENT LEAKAGE. (SH. 2)

LO13 .75 (3/4”) CS FEMALE NPT – PLUGGED (2 CONN.) – DRAIN FROM INSIDE ACCESSORY COMPARTMENT. NOTE: TO PREVENT LEAKAGE OF FIRE PROTECTION MEDIUM THESE DRAINS MUST REMAIN PLUGGED, OR IF A CONTINUOUS DRAIN IS DESIRED, IT MUST BE EQUIPPED WITH A WATER FILLED U-TRAP. NORMALLY NO FLOW. FLOW OF LUBE OIL OR WATER WOULD OCCUR ONLY IN THE EVENT OF COMPONENT LEAKAGE. (SH. 1)

LO14 .75 (3/4”) 316 SST FEMALE NPT MANUALLY OPERATED BALL VALVE – PLUGGED (2 CONN.) – LUBE FLUID FILTER CASING DRAIN. (IT IS RECOMMENDED THAT THESE VALVES BE PADLOCKED IN CLOSED POSITION WHEN NOT IN USE.). (SH. 1)

LO15 1.50 (1-1/2”) CS FEMALE NPT – PLUGGED (1 CONN.) – LUBE FLUID SURGE TANK DRAIN. (SH. 2)

LO16 1.50 (1-1/2”) CS FEMALE NPT – PLUGGED (1 CONN.) – LUBE FLUID AUXILIARY SURGE TANK DRAIN. (SH. 2)

REV.	FECHA	REVISIONES O MODIFICACIONES	DIBUJO	REVISO	APROBO
0	08/07/11	ISSUED FOR CONSTRUCTION, SEE NOTE:1, SHT-1	SB	CB	TK

REF. FABRICANTE		
REF. FABRICANTE	FABRICANTE	O/C:

DERWICK ASSOCIATES CORP. | ProEnergy SERVICES | CORPOELEC | La Electricidad de Caracas | GERENCIA FUNCIONAL DE INGENIERIA Y PROYECTOS | SENECA

AMPLIACIÓN DE LA CAPACIDAD DE GENERACIÓN Y TRANSPORTE DE ELECTRICIDAD EN LA ISLA DE MARGARITA

OUTLINE–GT PACKAGE CONNECTIONS–PIPING (NOTES)
DUAL FUEL MOD. UNITS 298034 & 298035
(MLI 0314)

PLANO N°:	REV:		
PROYECTO N°: 409-2956-1			
CALCULO:	PROYECTO:	ESCALA: NONE	PLANO No:
REVISADO: C. Brown	CALCULO:	FECHA: 08/07/11	AGM-02-0204-PLA-M-0004
DIBUJO: S. Boerckel	REVISADO: J. Castillo	DISK. N°	
APROBADO: T. Koontz	DIBUJO:	ESC./PLOTEO:	
ARCHIVO:	APROBADO: M. Monticelli	ARCHIVO:	PAGINA: 4 DE: 7 REV. 0

ALL DIMENSIONS IN BRACKETS [ ] ARE MILLIMETER; EXPRESSED DIMENSIONS ARE INCHES

LO17 .50 (1/2”) CS SOCKET WELD GATE VALVE (1 CONN.) – NO. 2 BEARING TELLTALE DRAIN. MUST BE OPERATED IN A FULLY OPEN CONDITION AND DRAINED TO SUITABLE COLLECTION OR DISPOSAL RECEPTACLE. THE DRAIN LINE CONNECTION MUST ALLOW FOR GAS VENTING AND GRAVITY OIL DRAIN TO THE RECEPTACLE. (SH. 2)

PG36 .50 (1/2”) SST FEMALE NPT (1 CONN.) – PURGE VALVE CONTROL AIR INLET. (SH. 2)

PM01 .375 (3/8”) 316 SST COMPRESSION TUBE FITTING (1 CONN.) – PERFORMANCE MONITORING – INLET PRESSURE PROBES. (THIS CONNECTION MUST BE RUN TO CONNECTION BDH IN THE PERFORMANCE MONITORING PACKAGE). (SH. 2)

PM02 .375 (3/8”) 316 SST COMPRESSION TUBE FITTING (1 CONN.) – PERFORMANCE MONITORING, BELLMOUTH PRESSURE. (THIS CONNECTION MUST BE RUN TO CONNECTION BDL IN THE PERFORMANCE MONITORING PACKAGE). (SH. 2)

*WW1 1.50 (1-1/2”) 150# 304L SST RAISED FACE FLANGE (1 CONN.) – OFF-LINE / ON-LINE COMPRESSOR WATER WASH INLET. THIS LINE MUST BE HEAT TRACED TO PREVENT FREEZING IN THE WINTER, SEE WATER WASH PIPING SCHEMATIC DIAGRAM ML ITEM 0442 FOR HEAT TRACING REQUIREMENTS. (SH. 2)

WW4 2.00 (2”) CS FEMALE NPT (1 CONN.) – TURBINE WATER WASH DRAIN. THIS LINE MUST HAVE A SHUT-OFF VALVE ATTACHED TO THE PURCHASER’S CONNECTION AND, IF REQUIRED, BE HEAT TRACED TO PREVENT FREEZING IN WINTER. SEE WATER WASH PIPING SCHEMATIC DIAGRAM ML ITEM 0442. (SH. 2)

WW6 1.00 (1”) CS FEMALE NPT VALVE (1 CONN.) – COMBUSTION WRAPPER WATER WASH DRAIN, FROM BOTTOM OF COMBUSTION CHAMBER. THIS LINE MUST BE HEAT TRACED TO PREVENT FREEZING IN THE WINTER, IF REQUIRED. REFER TO WATER WASH PIPING SCHEMATIC DIAGRAM, ML ITEM 0442. (SH. 2)

WW10 1.00 (1”) CS FEMALE NPT VALVE (1 CONN.) – WATER WASH DRAIN FROM TURBINE SHELL. THIS LINE MUST BE HEAT TRACED TO PREVENT FREEZING IN THE WINTER, IF REQUIRED. REFER TO WATER WASH PIPING SCHEMATIC DIAGRAM, ML ITEM 0442. (SH. 2)

WW12 .50 (1/2”) 316 SST FEMALE NPT GLOBE VALVE – PLUGGED (1 CONN.) – OFF-LINE COMPRESSOR WATER WASH MANIFOLD DRAIN. (SH. 2)

WW13 .50 (1/2”) 316 SST FEMALE NPT GLOBE VALVE – PLUGGED (1 CONN.) – ON-LINE COMPRESSOR WATER WASH MANIFOLD DRAIN. (SH. 2)

REV.	FECHA	REVISIONES O MODIFICACIONES	DIBUJO	REVISO	APROBO
0	08/07/11	ISSUED FOR CONSTRUCTION, SEE NOTE:1, SHT-1	SB	CB	TK

REF. FABRICANTE		
REF. FABRICANTE	FABRICANTE	O/C:

DERWICK ASSOCIATES CORP. / ProEnergy SERVICES / CORPOELEC / La Electricidad de Caracas / GERENCIA FUNCIONAL DE INGENIERIA Y PROYECTOS / SENECA

AMPLIACIÓN DE LA CAPACIDAD DE GENERACIÓN Y TRANSPORTE DE ELECTRICIDAD EN LA ISLA DE MARGARITA

OUTLINE–GT PACKAGE CONNECTIONS–PIPING (NOTES)
DUAL FUEL MOD. UNITS 298034 & 298035
(MLI 0314)

PLANO N°:	REV:		
PROYECTO N°: 409-2956-1			
CALCULO:	PROYECTO:	ESCALA: NONE	PLANO No: AGM-02-0204-PLA-M-0004
REVISADO: C. Brown	CALCULO:	FECHA: 08/07/11	
DIBUJO: S. Boerckel	REVISADO: J. Castillo	DISK. N°	
APROBADO: T. Koontz	DIBUJO:	ESC./PLOTEO:	
ARCHIVO:	APROBADO: M. Monticelli	ARCHIVO:	PAGINA: 5 DE: 7 REV. 0

ALL DIMENSIONS IN BRACKETS [ ] ARE MILLIMETER; EXPRESSED DIMENSIONS ARE INCHES

Added Piping Connections for Liquid Fuel and Associated Systems (T. Koontz – 16-Dec-09)

AA2 (A&B) .50 (1/2”) 316 SST COMPRESSION TUBE FITTING (2 CONN.) – FUEL OIL TELLTALE LEAKAGE THROUGH NOZZLE PURGE SYSTSEM.

AA3 1.00 (1”) 316 SST SOCKET WELD VALVE (3 CONN.) – ATOMIZING AIR LOW POINT DRAIN. [COMPRESSOR WATER WASH]

AA3 .50 (1/2”) 316 SST SOCKET WELD VALVE (1 CONN.) – ATOMIZING AIR LOW POINT DRAIN. [COMPRESSOR WATER WASH]

AA9 .50 (1/2”) FEMALE NPT (1 CONN.) – ATOMIZING AIR FILTER LOW POINT DRAIN.

AA15 .75 (3/4”) 316 SST COMPRESSION TUBE FITTING (1 CONN.) – 2ND ATOMIZING AIR HEAT EXCHANGER SHELL DRAIN.

CW3 .75 (3/4”) CS FEMALE NPT – PLUGGED (2 CONN.) – ATOMIZING AIR PRE-COOLER WATER HEAD DRAIN.

CW4 .75 (3/4”) CS FEMALE NPT – w/BALL VALVE (1 CONN.) – ATOMIZING AIR PRE-COOLER WATER HEAD VENT.

CW29 .75 (3/4”) FEMALE NPT – PLUGGED (1 CONN.) – PURGE AIR COOLER DRAIN.

CW30 .75 (3/4”) FEMALE NPT – w/BALL VALVE (1 CONN.) – PURGE AIR COOLER VENT.

CW108 1.25 (1-1/4”) BRONZE FEMALE NPT (1 CONN.) – COOLING WATER-PRESSURE RELIEF VALVE ATOMIZING AIR HEAT EXCHANGER.

LF1 3.00 (3”) 150# 304L SST RAISED FACE FLANGE (1 CONN.) – LIQUID FUEL OIL INLET.

LF2 1.00 (1”) CS FEMALE NPT (1 CONN.) – FUEL OIL DRAIN, FROM BOTTOM OF COMBUSTION CHAMBER, FALSE START.

LF3 1.00 (1”) CS FEMALE NPT (1 CONN.) – FUEL OIL DRAIN, FROM BOTTOM OF EXHAUST FRAME, FALSE START.

LF4 .75 (3/4”) CS FEMALE NPT (1 CONN.) – MAIN FUEL OIL FILTER DRAIN.

LF6 .50 (1/2”) CS FEMALE NPT – PLUGGED (1 CONN.) – FUEL OIL SUMP TANK DRAIN.

LF10 1.00 (1”) CS FEMALE NPT (1 CONN.) – FUEL OIL DRAIN FROM EXHAUST PLENUM (FALSE START).

LF17 1.00 (1”) CS NPT COUPLING (1 CONN.) – FUEL DISTRIBUTOR VALVE LEAKOFF DRAIN.

PG1 .75 (3/4”) 304 SST TUBE (1 CONN.) – PRIMARY GAS PURGE VALVE VENT. [FUEL GAS MODULE]

PG13 .75 (3/4” 304 SST TUBE (1 CONN.) – TRANSFER GAS PURGE VALVE VENT. [FUEL GAS MODULE

REV.	FECHA	REVISIONES O MODIFICACIONES	DIBUJO	REVISO	APROBO
0	08/07/11	ISSUED FOR CONSTRUCTION, SEE NOTE:1, SHT-1	SB	CB	TK

REF. FABRICANTE		
REF. FABRICANTE	FABRICANTE	O/C:

DERWICK ProEnergy SERVICES. CORPOELEC La Electricidad de Caracas GERENCIA FUNCIONAL DE INGENIERIA Y PROYECTOS SENECA

AMPLIACIÓN DE LA CAPACIDAD DE GENERACIÓN Y TRANSPORTE DE ELECTRICIDAD EN LA ISLA DE MARGARITA

OUTLINE–GT PACKAGE CONNECTIONS–PIPING (NOTES)
DUAL FUEL MOD. UNITS 298034 & 298035
(MLI 0314)

PLANO N°:	REV:		
PROYECTO N°: 409-2956-1			
CALCULO:	PROYECTO:	ESCALA: NONE	PLANO No:
REVISADO: C. Brown	CALCULO:	FECHA: 08/07/11	AGM-02-0204-PLA-M-0004
DIBUJO: S. Boerckel	REVISADO: J. Castillo	DISK. N°	
APROBADO: T. Koontz	DIBUJO:	ESC./PLOTEO:	
ARCHIVO:	APROBADO: M. Monticelli	ARCHIVO:	PAGINA: 6 DE: 7 REV. 0

F_A4_11 – 210x297mm

ALL DIMENSIONS IN BRACKETS [ ] ARE MILLIMETER; EXPRESSED DIMENSIONS ARE INCHES

PG33 .50 (1/2”) 316 SST COMPRESSION TUBE FITTING (1 CONN.) – WATER INJECTION TELL TALE LEAKAGE THROUGH WATER INJECTION PURGE VALVE.

PG35 .50 (1/2”) 316 SST COMPRESSION CHECK VALVE (1 CONN.) – INSTRUMENT AIR – PURGE VALVE ACTUATION SUPPLY.

PG46 1.00 (1”) CS FEMALE NPT BALL VALVE (1 CONN.) – PURGE AIR STRAINER BLOWDOWN.

W12 3.00 (3”) 600# 304L SST RAISED FACE FLANGE (1 CONN.) – FUEL NOZZLE WATER INJECTION INLET.

NOTE:
THE TOTAL RESULTANT FORCE AND TOTAL RESULTANT MOMENT IMPOSED ON THE TURBINE AT ANY CONNECTION MUST NOT EXCEED THE FOLLOWING:

F = (100) X (D)
M = (200) X (D)

WHERE F = RESULTANT FORCE IN POUNDS
M = RESULTANT MOMENT IN FT-LBS
D = PIPE SIZE OF THE CONNECTION (I.P.S) IN INCHES UP TO 8 INCHES IN DIAMETER. FOR SIZES GREATER THAN 8 INCHES IN DIAMETER USE A VALUE OF D EQUAL TO (16 + I.P.S.)/3 INCHES

REV.	FECHA	REVISIONES O MODIFICACIONES	DIBUJO	REVISO	APROBO
0	08/07/11	ISSUED FOR CONSTRUCTION, SEE NOTE:1, SHT-1	SB	CB	TK

REF. FABRICANTE		
REF. FABRICANTE	FABRICANTE	O/C:

DERWICK ASSOCIATES CORP. | ProEnergy SERVICES | CORPOELEC | La Electricidad de Caracas | GERENCIA FUNCIONAL DE INGENIERIA Y PROYECTOS | SENECA

AMPLIACIÓN DE LA CAPACIDAD DE GENERACIÓN Y TRANSPORTE DE ELECTRICIDAD EN LA ISLA DE MARGARITA

OUTLINE–GT PACKAGE CONNECTIONS–PIPING (NOTES)
DUAL FUEL MOD. UNITS 298034 & 298035
(MLI 0314)

PLANO N°:	REV:		
PROYECTO N°: 409-2956-1			
CALCULO:	PROYECTO:	ESCALA: NONE	PLANO No:
REVISADO: C. Brown	CALCULO:	FECHA: 08/07/11	AGM-02-0204-PLA-M-0004
DIBUJO: S. Boerckel	REVISADO: J. Castillo	DISK. N°	
APROBADO: T. Koontz	DIBUJO:	ESC./PLOTEO:	
ARCHIVO:	APROBADO: M. Monticelli	ARCHIVO:	PAGINA: 7 DE: 7 REV. 0

F_A4_11 – 210x297mm

N° PLANO: AGM-02-0204-PLA-M-0005 (0)

NOTES:

1. GENERAL MACHINING APPLIED PRACTICES ARE PER 348A9200.
2. STRUCTURAL WELDS ARE PER P8A–AG1, FIGURE PER APPENDIX III, FILLER METAL COLUMN AB PER APPENDIX II.
3. TORQUE BOLTS AND STUDS PER 248A4158.
4. INSTALL AND SUPPORT TUBING PER 215A4435.
5. FOR ALIGNING OF ACCY. GEAR, SEE ALIGNMENT INSTRUCTION, REFER TO ML ITEM 0410 FOR DRAWING NUMBER.
6. USE LOCKTITE TO SECURE TORQUE CONVERTER STUDS TO BASE (LOCKTITE No 271–A15B41A9).
7. FIT KEYS TO GEAR AND BASE THEN STAKE KEYS IN SLOTS OF BASE OF BASE TO ELIMINATE MOVEMENT OF KEYS.
8. FOR STARTING MOTOR/TORQUE CONVERTER/ACCESSORY GEAR ALIGNMENT REFER TO ITEM 5 (362A2924).
9. (0) SYSTEM PARAMETERS AND SPECIFICATIONS ARE BASED ON GE DRAWING 117E4636 (PROVIDED BY CUSTOMER). INCLUDING REQUIREMENTS FOR DUAL FUEL SYSTEMS PER CUSTOMER SCOPE OF WORK.

IMPORTANTE

ESTE PLANO FUE ELABORADO EN AUTOCAD V.2008
CUALQUIER MODIFICACION REALIZADA EN CAMPO DEBERA SER NOTIFICADO A LA UNIDAD RESPONSABLE.
QUEDA PROHIBIDO CORREGIR ESTE PLANO SIN AUTORIZACION DE ESTA UNIDAD.

ALL DIMENSIONS IN BRACKETS [ ] ARE MILLIMETER; EXPRESSED DIMENSIONS ARE INCHES

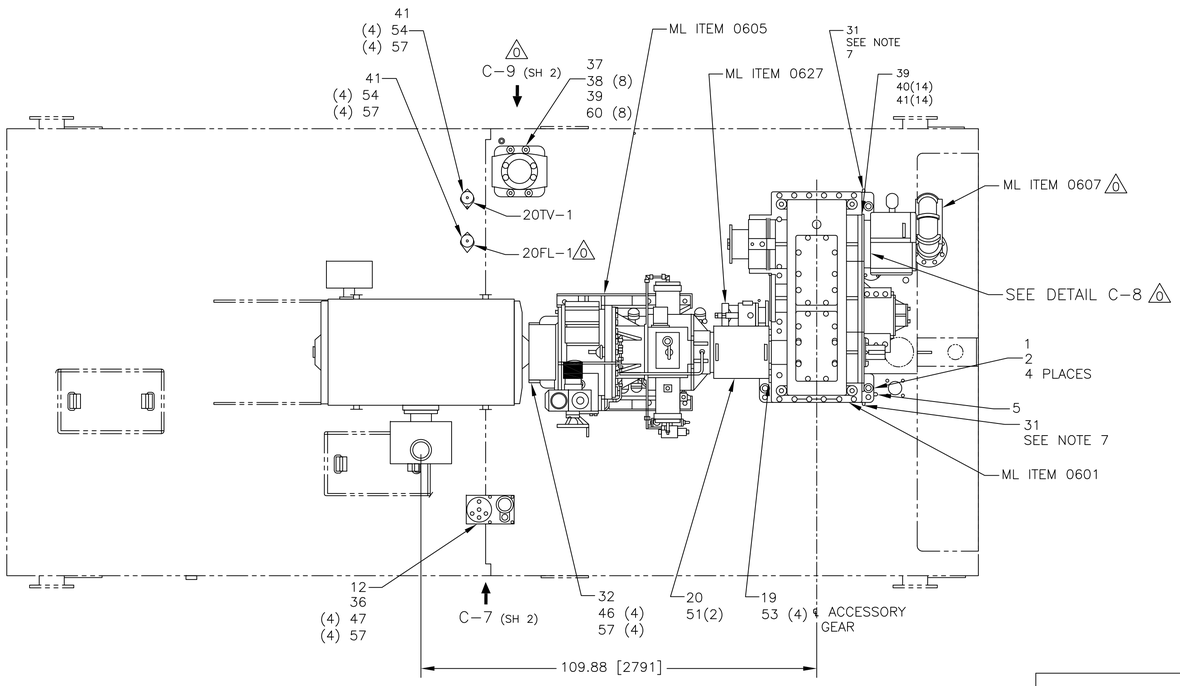

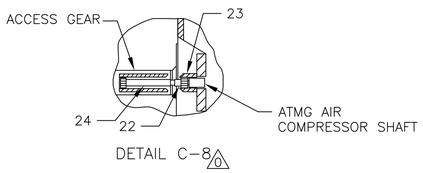

DETAIL C–8 (0)

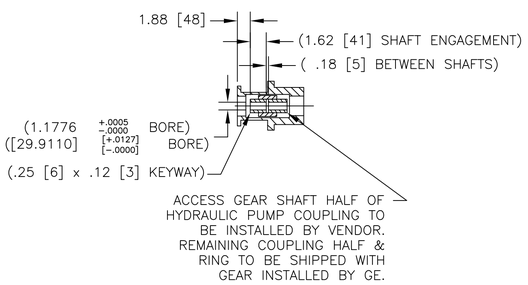

DETAIL B–8

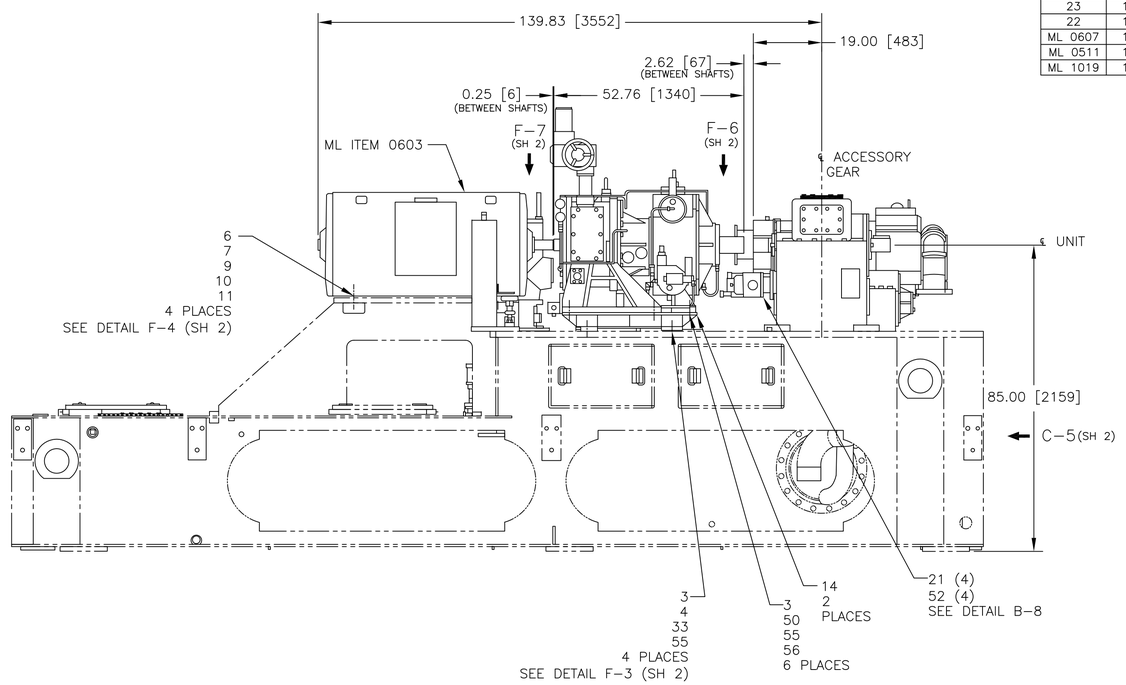

LIST OF EQUIPMENT				
ITEM	QTY	DESCRIPTION	MANUFACTURER	PART No
24	1	QUIL SHAFT	POWMAT	187C8260P001
23	1	HUB – COUPLING	POWMAT	187C8261P001
22	1	SNAP RING	POWMAT	311A5510P001
ML 0607	1	ATOMIZING COMPRESSOR	ATLAS COPCO	SCF–6
ML 0511	1	LIQUID FUEL STOP VALVE	YOUNG & FRANKLIN	357A1513P001
ML 1019	1	LIQUID FUEL SOLINOID VALVE	RUGGLES–KLINGEMANN NFG	354A1617P001

(G1) ACCESSORY GEAR, TORQUE CONVERTOR, STARTING MOTOR, MAIN HYDRAULIC PUMP, ACCUMULATOR AND 20TV –1.

(G2) ATMG AIR COMPRESSOR, STOP VALVE, AND 20FL–1.

(G3) WITH DC RATCHET CAPABILITY OWSA G1

N° DE DOCUMENTO	DESCRIPCIÓN	REV.	FECHA

DOCUMENTOS DE REFERENCIA

REV.	FECHA	REVISIONES O MODIFICACIONES	DIBUJO	REVISO	APROBO
0	08/07/11	ISSUED FOR CONSTRUCTION; SEE NOTE 9	SAB	CB	TK

REF. FABRICANTE		
REF. FABRICANTE	FABRICANTE	O/C:

DERWICK ASSOCIATES CORP. · ProEnergy SERVICES · CORPOELEC · La Electricidad de Caracas · SENECA

AMPLIACIÓN DE LA CAPACIDAD DE GENERACIÓN Y TRANSPORTE DE ELECTRICIDAD EN LA ISLA DE MARGARITA

CONTROL ARRANGEMENT FOR ACCESSORY BASE DUAL FUEL MOD. UNITS 298034 & 298035 (MLI 0502)

PLANO N°:	REV:		
PROYECTO N°: 409–2956–1			
CALCULO:	PROYECTO:	ESCALA: 1:20	PLANO No:
REVISADO: C. Brown	CALCULO:	FECHA: 08/07/11	AGM–02–0204–PLA–M–0005
DIBUJO: S. Boerckel	REVISADO: J. Castillo	DISK. N°	
APROBADO: T.Koontz	DIBUJO:	ESC./PLOTEO:	
ARCHIVO:	APROBADO: M. Monticelli	ARCHIVO:	PAGINA: 1 DE: 2 — REV. (0)

F_A1_11 – 841x594mm

LINEA DE CORTE DE ORIGINAL
LINEA DE CORTE DE COPIA

N° PLANO: AGM-02-0204-PLA-M-0005 (0)

IMPORTANTE
ESTE PLANO FUE ELABORADO EN AUTOCAD V.2008
CUALQUIER MODIFICACION REALIZADA EN CAMPO DEBERA SER NOTIFICADO A LA UNIDAD RESPONSABLE.
QUEDA PROHIBIDO CORREGIR ESTE PLANO SIN AUTORIZACION DE ESTA UNIDAD.

ALL DIMENSIONS IN BRACKETS [ ] ARE MILLIMETER; EXPRESSED DIMENSIONS ARE INCHES

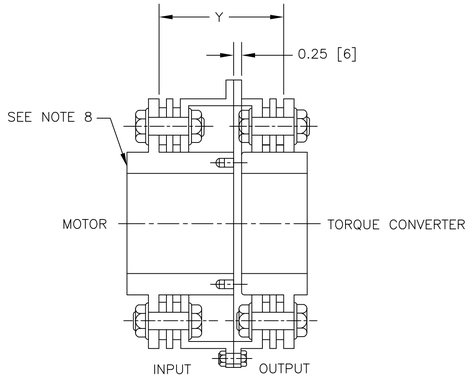

VIEW F–7 (SH 1)

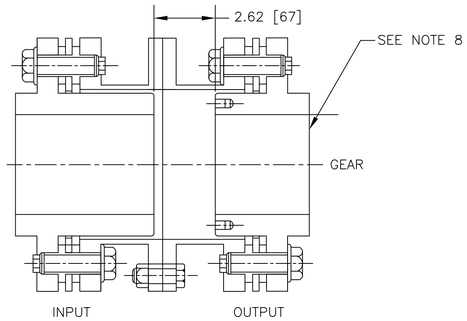

VIEW F–6 (SH 1)

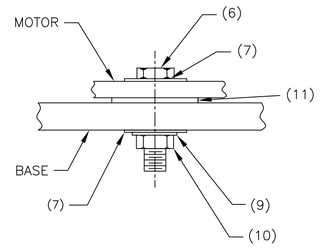

DETAIL F–4 (SH 1)

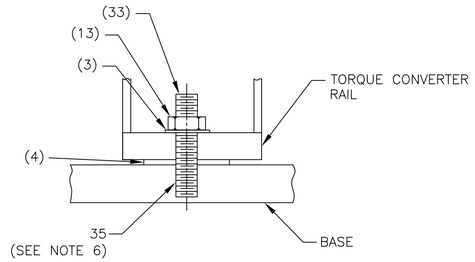

DETAIL F–3 (SH 1)

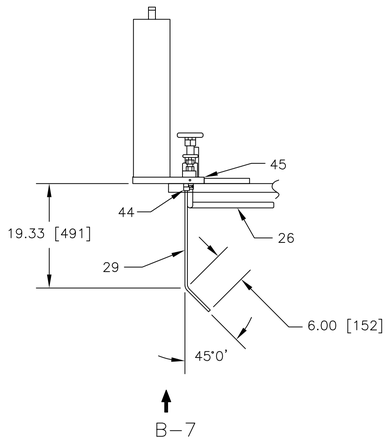

VIEW C–7 (SH 1)

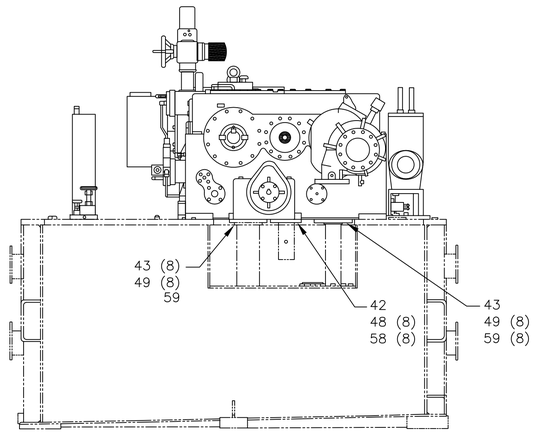

VIEW C–5 (SH 1)

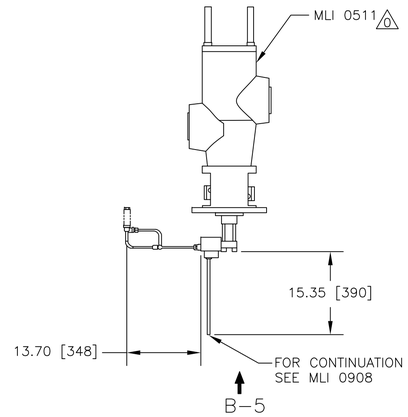

VIEW C–9 (SH 1)

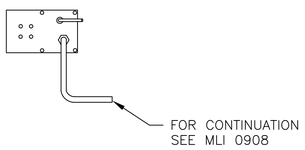

VIEW B–7

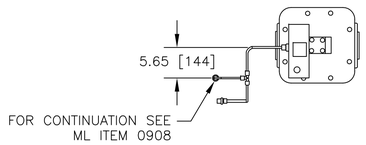

(0) VIEW B–5

REV.	FECHA	REVISIONES O MODIFICACIONES	DIBUJO	REVISO	APROBO
(0)	08/07/11	ISSUED FOR CONSTRUCTION; SEE NOTE 9 SHEET 1	SAB	CB	TK

REF. FABRICANTE		
REF. FABRICANTE	FABRICANTE	O/C:

N° DE DOCUMENTO	DESCRIPCIÓN	REV.	FECHA

DOCUMENTOS DE REFERENCIA

DERWICK · ProEnergy SERVICES · CORPOELEC · La Electricidad de Caracas · GERENCIA FUNCIONAL DE INGENIERIA Y PROYECTOS · SENECA

AMPLIACIÓN DE LA CAPACIDAD DE GENERACIÓN Y TRANSPORTE DE ELECTRICIDAD EN LA ISLA DE MARGARITA

CONTROL ARRANGEMENT FOR ACCESSORY BASE
DUAL FUEL MOD. UNITS 298034 & 298035
(MLI 0502)

PLANO N°:	REV:		
PROYECTO N°: 409-2956-1			
CALCULO:	PROYECTO:	ESCALA: 1:20	PLANO No: AGM-02-0204-PLA-M-0005
REVISADO: C. Brown	CALCULO:	FECHA: 08/07/11	
DIBUJO: S. Boerckel	REVISADO: J. Castillo	DISK. N°	
APROBADO: T.Koontz	DIBUJO:	ESC./PLOTEO:	
ARCHIVO:	APROBADO: M. Monticelli	ARCHIVO:	PAGINA: 2 DE: 2 — REV. (0)

F_A1_11 – 841x594mm

LINEA DE CORTE DE COPIA
LINEA DE CORTE DE ORIGINAL

0	AGM-02-0204-PLA-M-0007
	N° PLANO:

NOTES

1. LOCATE FUEL PUMP SUPPORT TO DIMENSIONS GIVEN AND BOLT MOUNT TO MODULE BASE AS SPECIFIED. AFTER FIELD ALIGNMENT VERIFICATION/ADJUSTMENT, WELD PUMP MOUNT TO BASE, DIAGONALLY ON OPPOSITE CORNERS. WELD PER P8A–AG1 FIG. F–1, COL AB APPLICABILITY CLASS III, INSPECTION CODE– VISUAL UNLESS OTHERWISE SPECIFIED.
2. ASSEMBLE ELECTRIC CLUTCH TO ACCESSORY DRIVE NO. 3A SHAFT. VERIFY CORRECT CLUTCH GAP SHOWN ON DRAWING.
3. WITH THE PUMP IN PLACE, ADJUST THE COUPLING PARTS AXIALLY TO MEET WITHOUT DISC DISTORTION. TIGHTEN TAPER LOCK BUSHINGS. ALIGN TO PROVIDE TIR'S NOT IN EXCESS OF 0.008" [0.203] AT OUTER RIM OF COUPLING HUBS FOR BOTH AXES. CONNECT COUPLING BY REINSTALLING THE 4 BOLTS.
4. TORQUE ALL FUEL PUMP TIE DOWN BOLTS. ALLOW A MAXIMUM CLEARANCE OF 0.002" [0.051]. AFTER FINAL ALIGNMENT AND DOWELING RELEASE BOLTS. CHECK FOOT MOVEMENT ON LOOSENING 0.002 INCHES. SHIM IF NECESSARY. RE–TORQUE TO 50 FT–LBS.
5. DOWELS TO HAVE 0.0003 ±0.0002 INTERFERENCE FIT AT ASSEMBLY.
6. SPECIFICATIONS AND COMPLIMENTARY DOCUMENTS ARE PROVIDED BY CUSTOMER AS PART OF THE ORIGINAL UNIT DOCUMENTATION

PARTS LIST

ITEM	DESCRIPTION	VENDOR/PART NUMBER	QTY
1	PUMP	IMO / 12D–312	1
2	ELECTRIC CLUTCH	CARLYLE JOHNSON / 317A9333	1
3	COUPLING	TB WOODS / BY43–0103	1
4	PUMP STAND	PES / MFPS–000	1

IMPORTANTE
ESTE PLANO FUE ELABORADO EN AUTOCAD V.2008
CUALQUIER MODIFICACION REALIZADA EN CAMPO DEBERA SER NOTIFICADO A LA UNIDAD RESPONSABLE.
QUEDA PROHIBIDO CORREGIR ESTE PLANO SIN AUTORIZACION DE ESTA UNIDAD.

ALL DIMENSIONS IN BRACKETS [ ] ARE MILLIMETER; EXPRESSED DIMENSIONS ARE INCHES

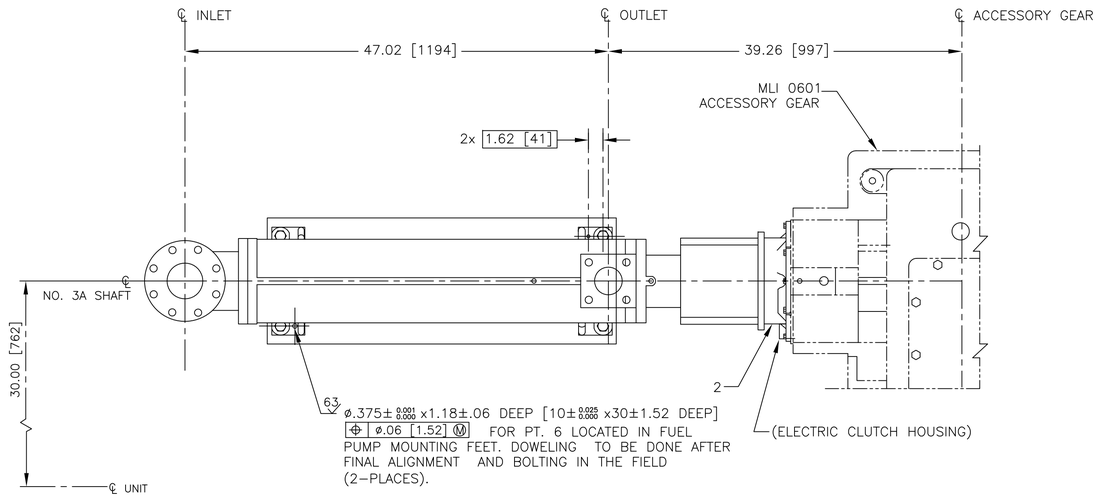

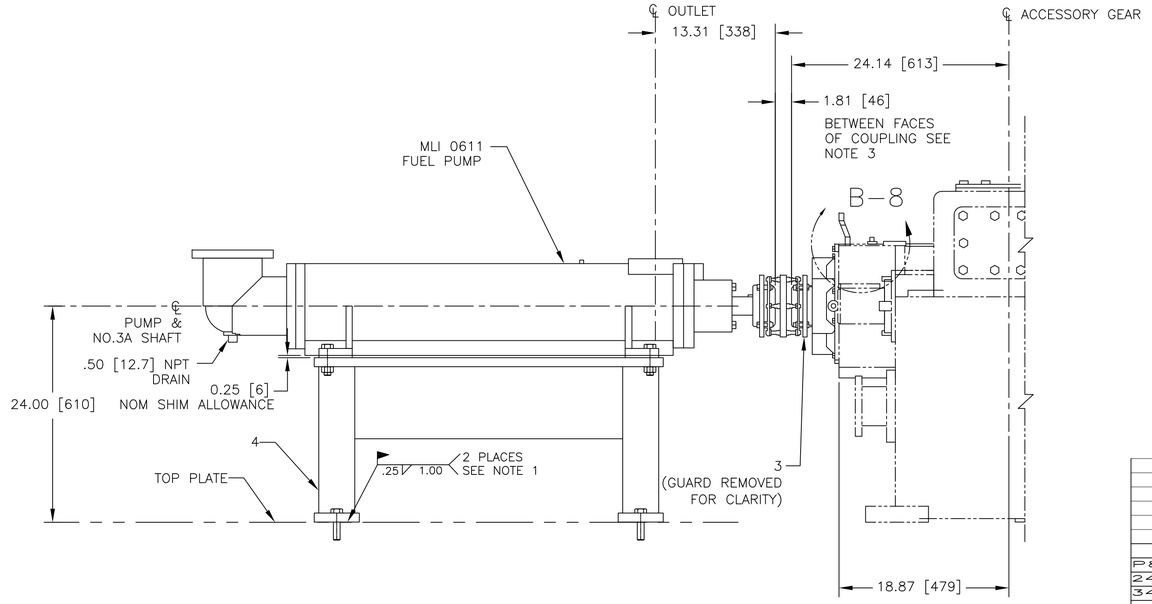

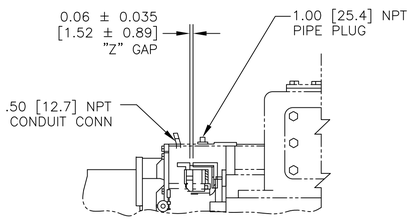

DETAIL B–8

0	07/07/11	ISSUED FOR CONSTRUCTION	SAB	CB	TK
REV.	FECHA	REVISIONES O MODIFICACIONES	DIBUJO	REVISO	APROBO

REF. FABRICANTE		
REF. FABRICANTE	FABRICANTE	O/C:

P8A–AG1	WELDING – GENERAL SPEC	
248A4158	BOLT & STUD TORQUE	
348A9200	APPLIED PRACTICES	
N° DE DOCUMENTO	DESCRIPCIÓN	REV. / FECHA

DOCUMENTOS DE REFERENCIA

DERWICK · ProEnergy SERVICES · CORPOELEC · La Electricidad de Caracas · GERENCIA FUNCIONAL DE INGENIERIA Y PROYECTOS · SENECA

AMPLIACIÓN DE LA CAPACIDAD DE GENERACIÓN Y TRANSPORTE DE ELECTRICIDAD EN LA ISLA DE MARGARITA

FUEL PUMP ARRANGEMENT
DUAL FUEL MOD. UNITS 298034 & 298035
(MLI 0510)

PLANO N°:	REV:		
PROYECTO N°: 409–2956–1			
CALCULO:	PROYECTO:	ESCALA: 1=8	PLANO No:
REVISADO: C. Brown	CALCULO:	FECHA: 07/07/11	AGM-02-0204-PLA-M-0007
DIBUJO: S. Boerckel	REVISADO: J. Castillo	DISK. N°	
APROBADO: T. Koontz	DIBUJO:	ESC./PLOTEO:	
ARCHIVO:	APROBADO: M. Monticelli	ARCHIVO:	PAGINA: 1 DE: 2 — REV. 0

F_A1_11 – 841x594mm

LINEA DE CORTE DE ORIGINAL
LINEA DE CORTE DE COPIA

N° PLANO: AGM-02-0204-PLA-M-0007 | 0

NOTES:

1. WELDS ARE TO BE GREATER THAN OR EQUAL TO THE MINIMUM THICKNESS OF MATERIAL WHERE NOT SPECIFICALLY CALLED OUT OR NOTED OTHERWISE. ALL WELDING SHALL CONFORM TO THE AMERICAN WELDING SOCIETY CODE.

2. ALL MATERIAL WILL BE STANDARD GRADE CARBON STEEL CONFORMING TO ASTM SPECIFICATION A36 EXCEPT SQUARE OR RECTANGULAR TUBE SHAPES SHALL CONFORM TO ASTM A500, GRADE B. ALL SHAPES AND PLATE 3/16" AND THICKER TO BE EQUAL TO A36.

IMPORTANTE

ESTE PLANO FUE ELABORADO EN AUTOCAD V.2008
CUALQUIER MODIFICACION REALIZADA EN CAMPO DEBERA SER NOTIFICADO A LA UNIDAD RESPONSABLE.
QUEDA PROHIBIDO CORREGIR ESTE PLANO SIN AUTORIZACION DE ESTA UNIDAD.

ALL DIMENSIONS IN BRACKETS [ ] ARE MILLIMETER; EXPRESSED DIMENSIONS ARE INCHES.

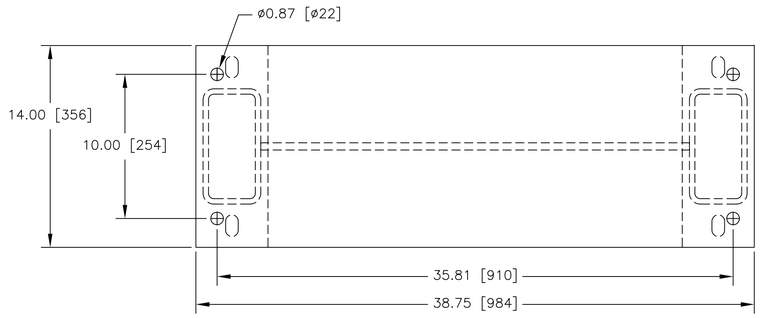

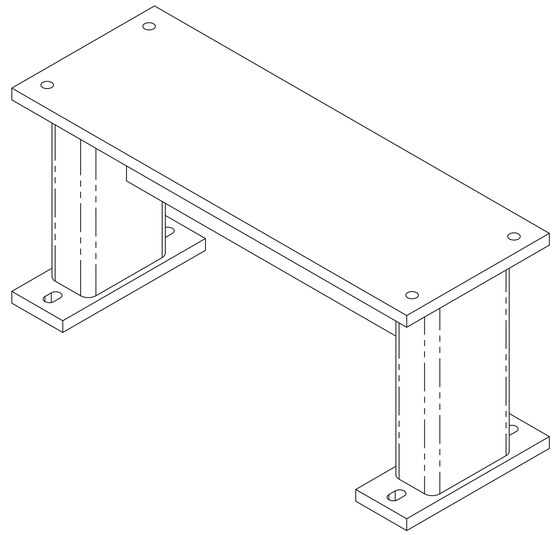

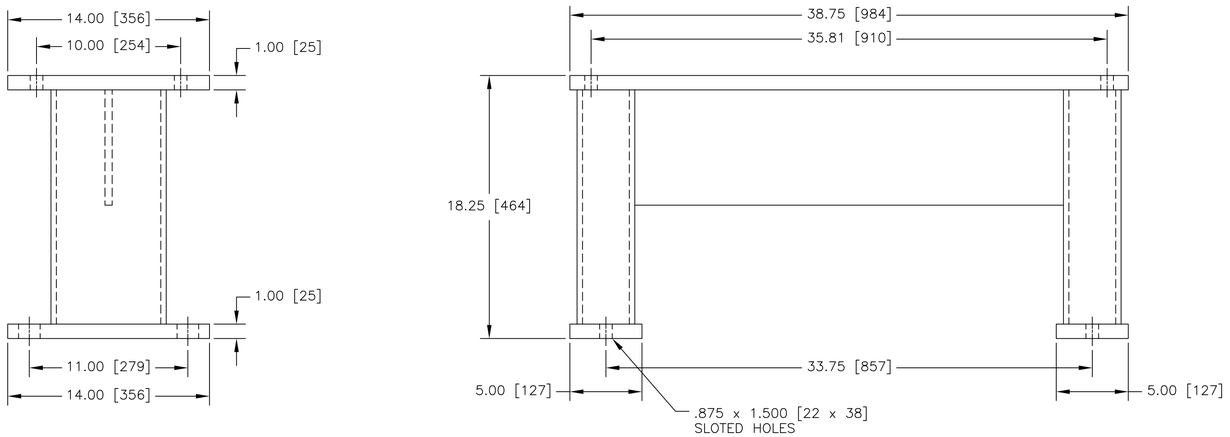

ITEM–4 PUMP STAND DETAILS

N° DE DOCUMENTO	DESCRIPCIÓN	REV.	FECHA
P8A—AG1	WELDING – GENERAL SPEC		
248A4158	BOLT & STUD TORQUE		
348A9200	APPLIED PRACTICES		

DOCUMENTOS DE REFERENCIA

REV.	FECHA	REVISIONES O MODIFICACIONES	DIBUJO	REVISO	APROBO
0	07/07/11	ISSUED FOR CONSTRUCTION	SAB	CB	TK

REF. FABRICANTE		
REF. FABRICANTE	FABRICANTE	O/C:

DERWICK ProEnergy CORPOELEC La Electricidad de Caracas SENECA

AMPLIACIÓN DE LA CAPACIDAD DE GENERACIÓN Y TRANSPORTE DE ELECTRICIDAD EN LA ISLA DE MARGARITA

FUEL PUMP ARRANGEMENT
DUAL FUEL MOD. UNITS 298034 & 298035
(MLI 0510)

PLANO N°:	REV:		
PROYECTO N°: 409–2956–1	PROYECTO:	ESCALA: 1=5	PLANO No: AGM-02-0204-PLA-M-0007
CALCULO:	CALCULO:	FECHA: 07/07/11	
REVISADO: C. Brown	REVISADO: J. Castillo	DISK. N°	
DIBUJO: S. Boerckel	DIBUJO:	ESC./PLOTEO:	
APROBADO: T. Koontz	APROBADO: M. Monticelli	ARCHIVO:	PAGINA: 2 DE: 2 — REV. 0
ARCHIVO:			

F_A1_11 – 841x594mm

LINEA DE CORTE DE COPIA
LINEA DE CORTE DE ORIGINAL

LINEA DE CORTE DE ORIGINAL
LINEA DE CORTE DE COPIA

N° PLANO: AGM-02-0204-PLA-M-0009 / 0

IMPORTANTE

ESTE PLANO FUE ELABORADO EN AUTOCAD V.2008
CUALQUIER MODIFICACION REALIZADA EN CAMPO DEBERA SER NOTIFICADO A LA UNIDAD RESPONSABLE.
QUEDA PROHIBIDO CORREGIR ESTE PLANO SIN AUTORIZACION DE ESTA UNIDAD.

ALL DIMENSIONS IN BRACKETS [ ] ARE MILLIMETER, EXPRESSED DIMENSIONS ARE INCHES

NOTES:

1. SYSTEM PARAMETERS AND SPECIFICATIONS ARE BASED ON GE DRAWING 116E1640 (PROVIDED BY CUSTOMER). INCLUDING REQUIREMENTS FOR DUAL FUEL SYSTEMS PER CUSTOMER SCOPE OF WORK.

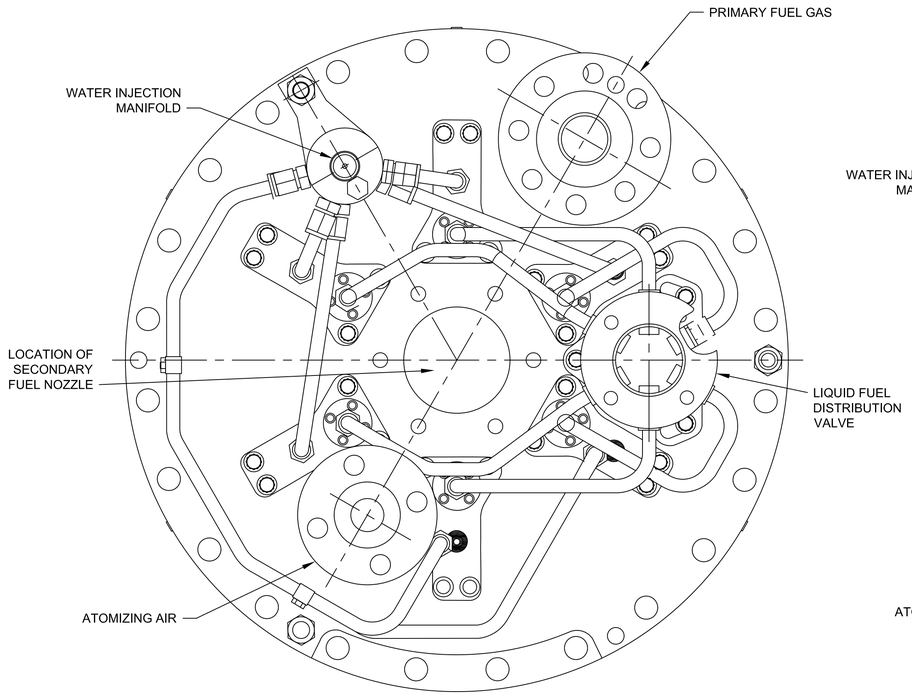

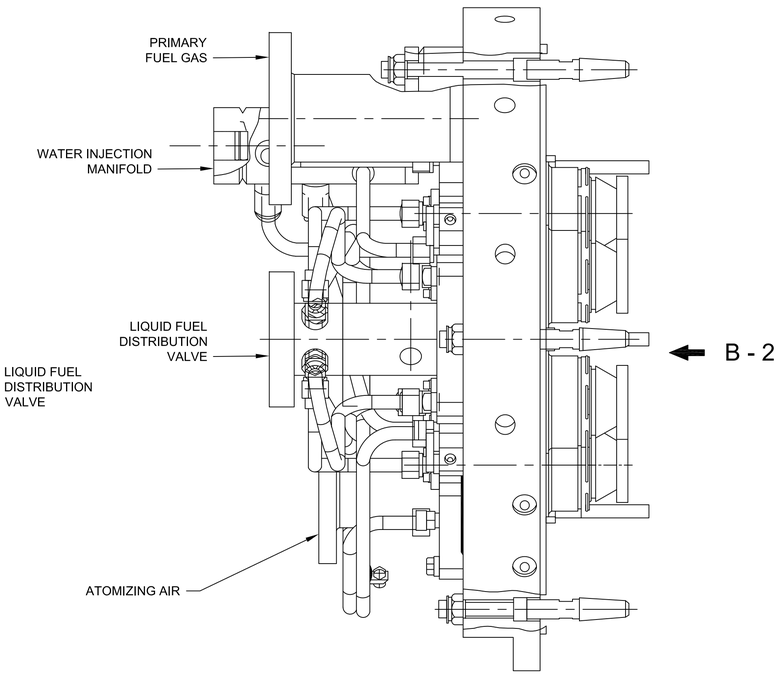

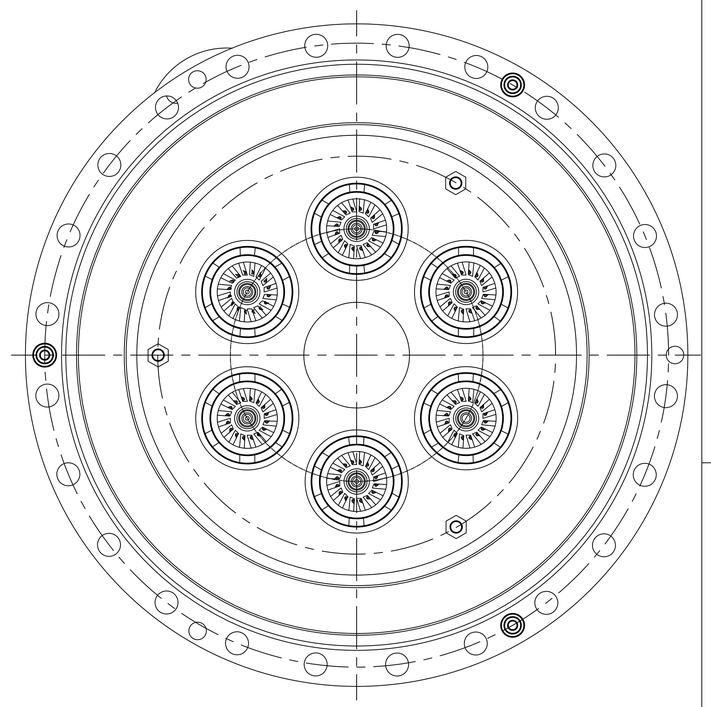

VIEW B - 2

N° DE DOCUMENTO	DESCRIPCIÓN	REV.	FECHA
DOCUMENTOS DE REFERENCIA			

REV.	FECHA	REVISIONES O MODIFICACIONES	DIBUJO	REVISO	APROBO
0	14/07/11	ISSUED FOR CONSTRUCTION, SEE NOTE 1	SAB	CB	TK

REF. FABRICANTE		
REF. FABRICANTE	FABRICANTE	O/C:

DERWICK ASSOCIATES CORP. — ProEnergy SERVICES — CORPOELEC CORPORACION ELECTRICA NACIONAL — La Electricidad de Caracas — GERENCIA FUNCIONAL DE INGENIERIA Y PROYECTOS — SENECA

AMPLIACIÓN DE LA CAPACIDAD DE GENERACIÓN Y TRANSPORTE DE ELECTRICIDAD EN LA ISLA DE MARGARITA

DUAL FUEL NOZZLE ASSEMBLY – PRIMARY
DUAL FUEL MOD. UNITS 298034 & 298035
(MLI 0512)

PLANO N°:	REV:		
PROYECTO N°: 409-2956-1			
CALCULO:	PROYECTO:	ESCALA: NONE	PLANO No:
REVISADO: C. Brown	CALCULO:	FECHA: 14/07/11	AGM-02-0204-PLA-M-0009
DIBUJO: S. Boerckel	REVISADO: J. Castillo	DISK. N°	
APROBADO: T. Koontz	DIBUJO:	ESC./PLOTEO:	
ARCHIVO:	APROBADO: M. Monticelli	ARCHIVO:	PAGINA: 1 DE: 1 — REV. 0

F_A1_11 – 841x594mm

LINEA DE CORTE DE COPIA
LINEA DE CORTE DE ORIGINAL

LINEA DE CORTE DE ORIGINAL
LINEA DE CORTE DE COPIA

0	N° PLANO: AGM-02-0204-PLA-M-0013

NOTES:

1. SYSTEM PARAMETERS AND SPECIFICATIONS ARE BASED ON GE DRAWING 119E1856 (PROVIDED BY CUSTOMER). INCLUDING REQUIREMENTS FOR DUAL FUEL SYSTEMS PER CUSTOMER SCOPE OF WORK.

IMPORTANTE

ESTE PLANO FUE ELABORADO EN AUTOCAD V.2008 CUALQUIER MODIFICACION REALIZADA EN CAMPO DEBERA SER NOTIFICADO A LA UNIDAD RESPONSABLE.
QUEDA PROHIBIDO CORREGIR ESTE PLANO SIN AUTORIZACION DE ESTA UNIDAD.

ALL DIMENSIONS IN BRACKETS [ ] ARE MILLIMETER; EXPRESSED DIMENSIONS ARE INCHES

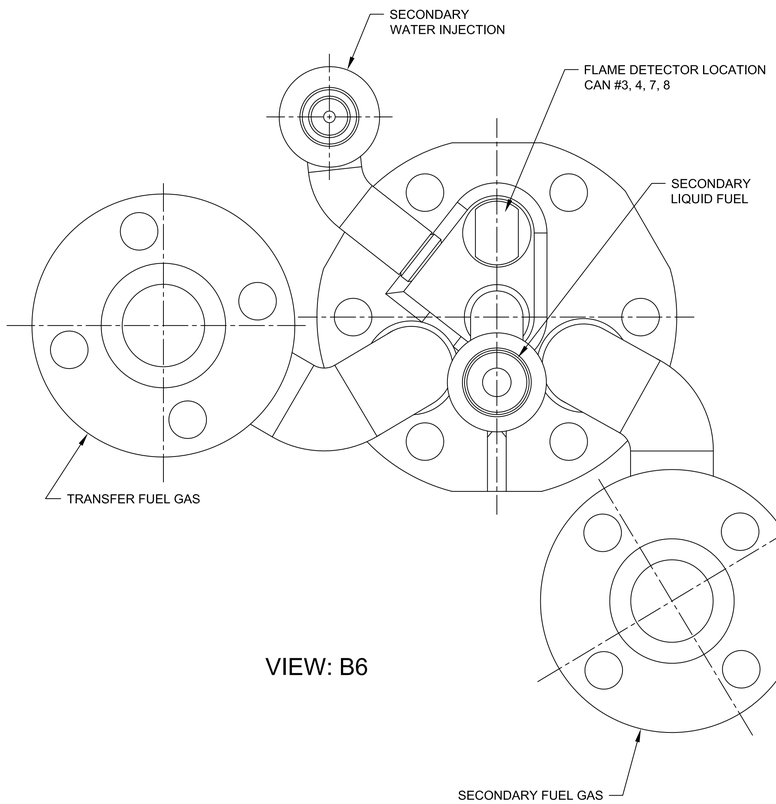

VIEW: B6

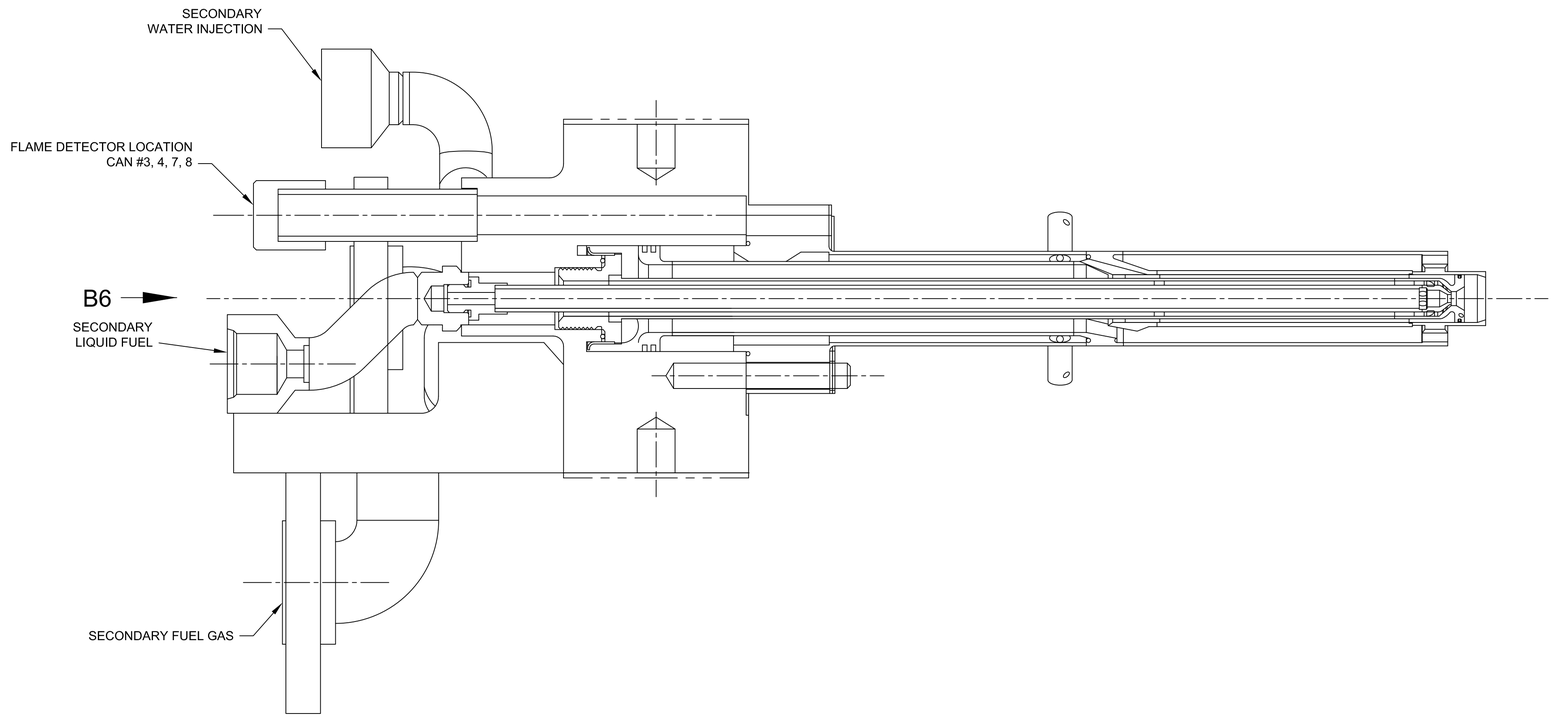

N° DE DOCUMENTO	DESCRIPCIÓN	REV.	FECHA
DOCUMENTOS DE REFERENCIA			

REV.	FECHA	REVISIONES O MODIFICACIONES	DIBUJO	REVISO	APROBO
0	14/07/11	ISSUED FOR CONSTRUCTION, SEE NOTE 1	SAB	CB	TK

REF. FABRICANTE		
REF. FABRICANTE	FABRICANTE	O/C:

DERWICK ASSOCIATES EGBM · ProEnergy SERVICES · CORPOELEC · La Electricidad de Caracas · GERENCIA FUNCIONAL DE INGENIERIA Y PROYECTOS · SENECA

AMPLIACIÓN DE LA CAPACIDAD DE GENERACIÓN Y TRANSPORTE DE ELECTRICIDAD EN LA ISLA DE MARGARITA

DUAL FUEL NOZZLE ASSEMBLY – SECONDARY
DUAL FUEL MOD. UNITS 298034 & 298035
(MLI 0566)

PLANO N°:	REV:		
PROYECTO N°: 409-2956-1			
CALCULO:	PROYECTO:	ESCALA: NONE	PLANO No: AGM-02-0204-PLA-M-0013
REVISADO: C. Brown	CALCULO:	FECHA: 14/07/11	
DIBUJO: S. Boerckel	REVISADO: J. Castillo	DISK. N°	
APROBADO: T. Koontz	DIBUJO:	ESC./PLOTEO:	REV. 0
ARCHIVO:	APROBADO: M. Monticelli	ARCHIVO:	PAGINA: 1 DE: 1

F_A1_11 – 841x594mm

LINEA DE CORTE DE COPIA
LINEA DE CORTE DE ORIGINAL

SIZE	DWG NO	SH	REV
E	116E3253	1	B

REVISIONS

REV	DESCRIPTION	DATE	APPROVED
A	MP61582 MADE CORRECTIONS PER DCI-00008139. M.B. NEIKIRK 00-08-07	00-08-07 M.B. NEIKIRK	LGM TAG
B	AN 00023004, QCR F09201 & Y03151GENL CHG TO SHEETS 1,3 & 4 TERESA MILLWOOD	00-12-04 TAM	LDK TAG

REVISE ON CAD ONLY
UG PART: GS7078-0908-A0001
(SPEC: 116E3253)

NOTES:

1. PIPING PRACTICES PER 351A3700.
2. PIPING WELDS PER P8A-AG3, CODE N, FIG. PER SPEC APPENDIX II, FILLER METAL PER COL. AE-L, UNLESS OTHERWISE SPECIFIED.
3. ALL OTHER WELDS PER P8A-AG1,FIG. PER SPEC APPENDIX III, FILLER METAL PER COL AB, UNLESS OTHERWISE SPECIFIED. ASSEMBLY WELDS ARE TO BE DESIGNATED BY THE SYMBOL "X".
4. WELD ALL THE PIPE/TUBE SUPPORTS WITH A .125 FILLET ALL AROUND, UNLESS OTHERWISE SPECIFIED.
5. THE SUGGESTED MAXIMUM SPAN BETWEEN SUPPORTS = 30 INCHES.
6. REF MLI 0903 (OIL TANK PIPING INTERNAL) FOR PIPING CONNECTIONS (SHOWN IN PHANTOM).
7. REF MLI 0502 (CONTROL ARR ACCESS SYS) FOR TUBING/FLEX HOSE TO BE INSTALLED WITH EQUIPMENT (SHOWN IN PHANTOM).
8. WELD PART 19 (SLIP JOINT CPLG) TO BASE DECK WITH A .25 FILLET ALL AROUND BEFORE COMPLETING THE ASSEMBLY WELD OF PARTS 4 & 21.
9. DIMENSIONS IN PARENTHESIS ARE FOR REFERENCE ONLY.
10. TUBE & FITTINGS ASSEMBLY TO BE PER 215A4435.
11. HYDROSTATIC TESTING FOR ALL LUBE OIL PIPING IS A REQUIRED FEATURE PER 362A2490. (G4 & G5 ONLY)
12. TRIM TOP OF U-BOLT PIPE SUPPORT, PT 32, TO FIT INSIDE CURVATURE OF WELD NECK FLANGE ON MLI-0948. WELD PER P8A-AG1, ALL AROUND. (.12 WELD)

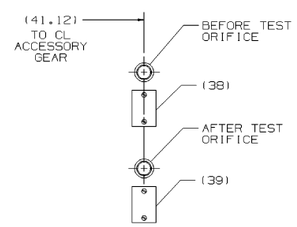

VIEW D-8 (G-4)
ROTATED 180°

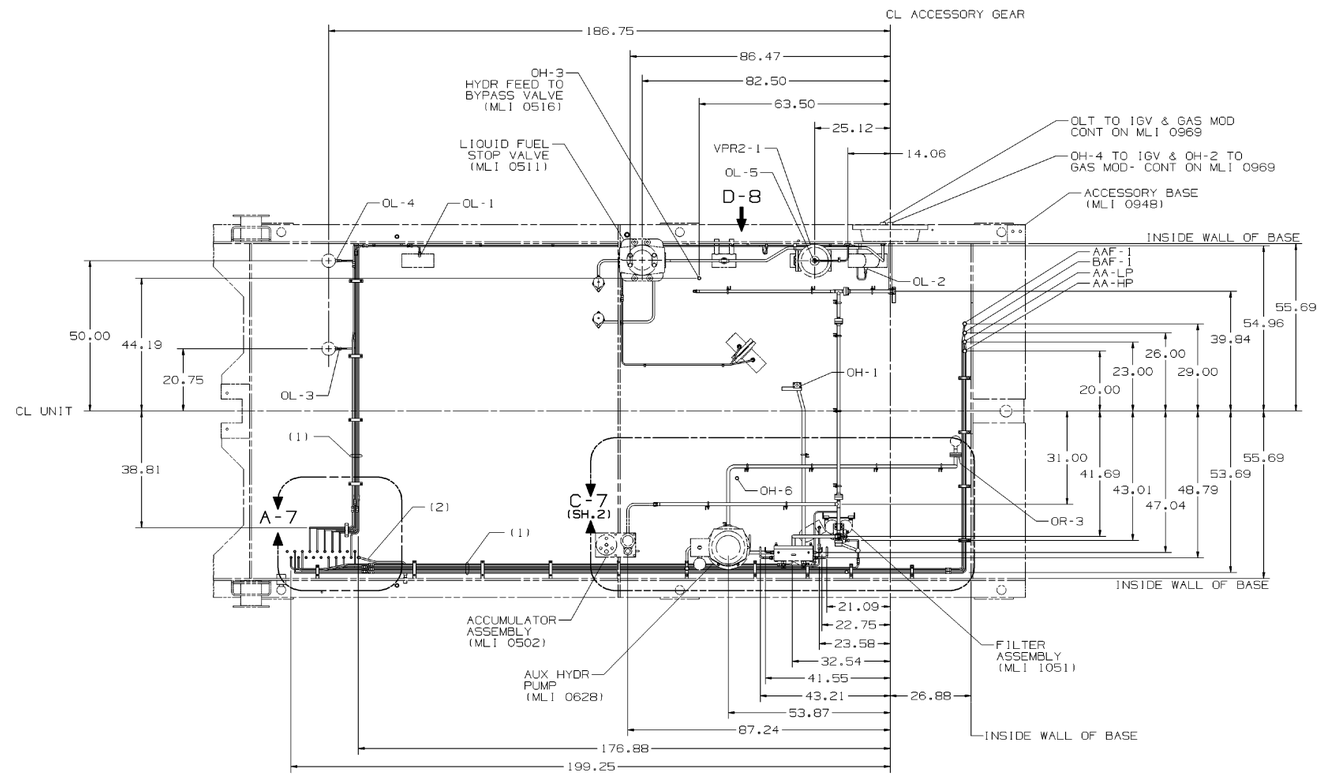

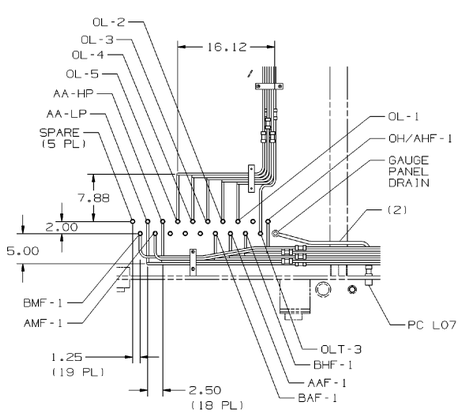

DETAIL A-7 (F-6)
(FOR LUBE OIL GAUGE PANEL)

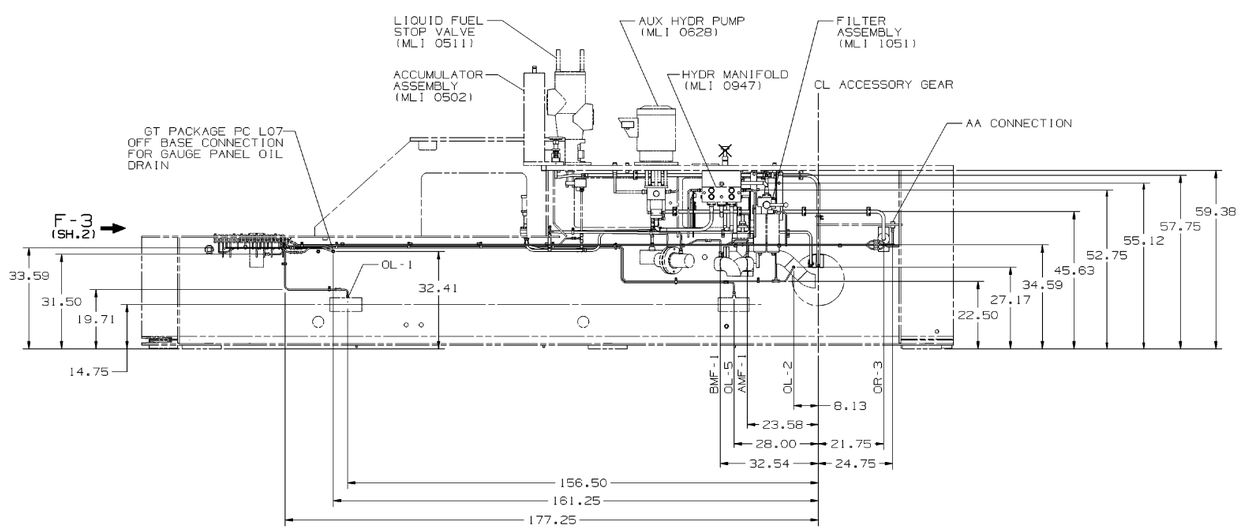

(G1) PP ARR - (BEFORE 0903 PIPING) ALL TUBING AND PIPING (304L SST) [AB32]

(G2) PP ARR - (AFTER 0903 PIPING) ALL TUBING AND PIPING (304L SST) [AB38]

(G3) PP ARR - (AFTER FLUSH HARDWARE) ALL TUBING (304L SST) [AB40]

(G4) PP ARR - (BEFORE 0903 PIPING) ALL TUBING AND PIPING (304L SST) HYDROSTATIC TESTING REQUIRED FOR ALL LUBE OIL PIPING, OWSA G1 [AB32]

(G5) PP ARR - (AFTER 0903 PIPING) ALL TUBING AND PIPING (304L SST) HYDROSTATIC TESTING REQUIRED FOR ALL LUBE OIL PIPING, OWSA G2 [AB38]

7	HYDRO TEST, LUBE OIL PP	362A2490
6	INSTRUCTIONS, TEST - PP	362A1310
5	TUBE & FITTINGS ASSY	215A4435
4	WELDING - GENERAL SPEC	P8A-AG1
3	WELDING - PIPING SPEC	P8A-AG3
2	PIPING PRACTICES	351A3700
1	APPLIED PRACTICES	348A9200
IT.	NOMENCLATURE	IDENT
	LIST OF COMPLEMENTARY DOCUMENTS	

5	4	3	2	1	SH	REV	REV STATUS OF SHEETS
-	B	B	-	B		REV	

BOM ISSUED

UNLESS OTHERWISE SPECIFIED	SIGNATURES		DATE
DIMENSIONS ARE IN INCHES	DRAWN	M.B.NEIKIRK	00-07-20
TOLERANCES ON: 2 PL DECIMALS ± — 3 PL DECIMALS ± — ANGLES ± — FRACTIONS ± —	CHECKED	L.G.MCABEE	00-08-04
	ENGRG	T.A.GARNETT	00-08-04
	ISSUED	M.B.NEIKIRK	00-08-04
APPLIED PRACTICES 348A9200	D.C.	R.C.NOEL	00-08-04
	SIM TO:	116E3084	

GE Power Generation — GENERAL ELECTRIC COMPANY GAS TURBINE Greenville, SC

PIPING ARR, CONTROL OIL-INTERNAL

FIRST MADE FOR ML-7A1PEA1-15 0908

SIZE E — CAGE CODE — DWG NO 116E3253

SCALE NONE — SHEET 1

THIRD ANGLE PROJECTION

DT-IN

SIZE	DWG NO	SH	REV
E	116E3253	2	–

REVISIONS

REV	DESCRIPTION	DATE	APPROVED

REVISE ON CAD ONLY
UG PART: GS7078-0908-A0001
(SPEC: 116E3253)

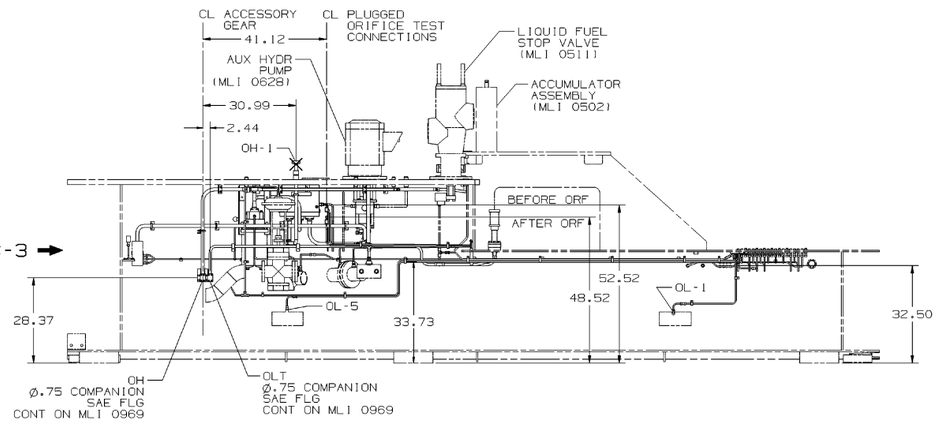

VIEW F-7 (G-4)

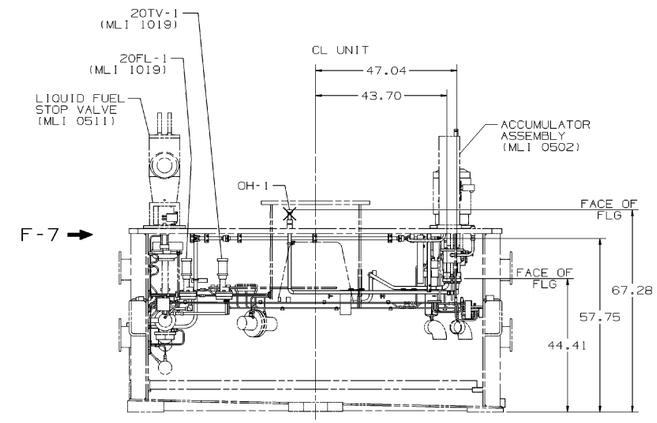

VIEW F-3 (C-6 SH.1)

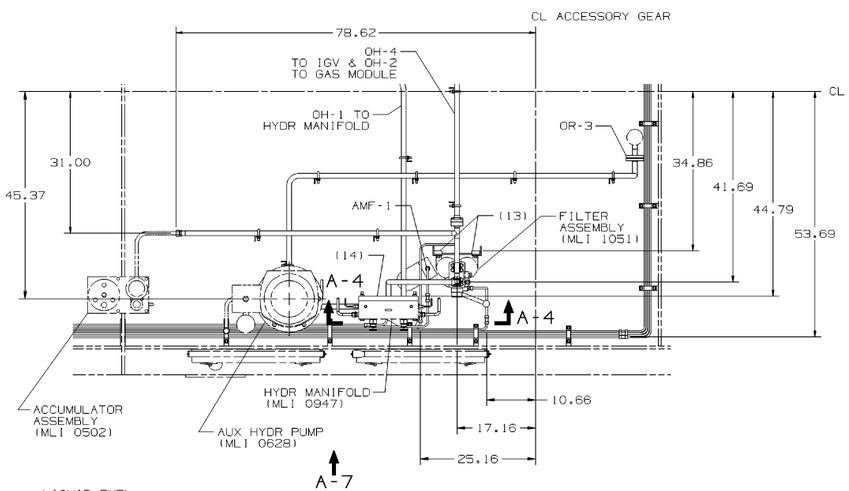

DETAIL C-7 (F-5 SH.1)
(HYDRAULIC AREA)

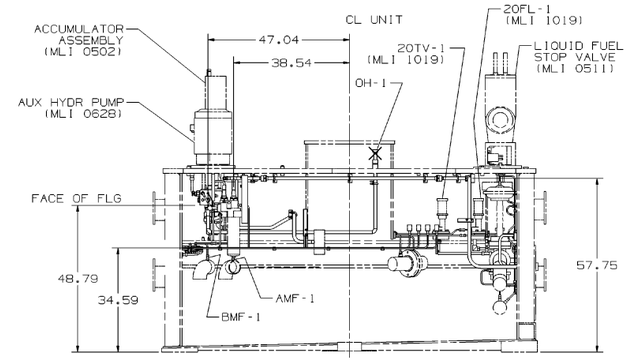

VIEW C-3 (G-8)

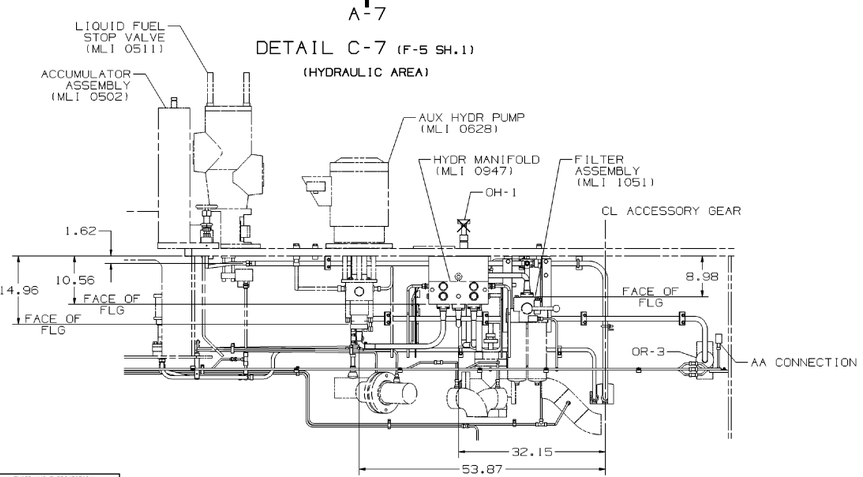

VIEW A-7 (C-7)

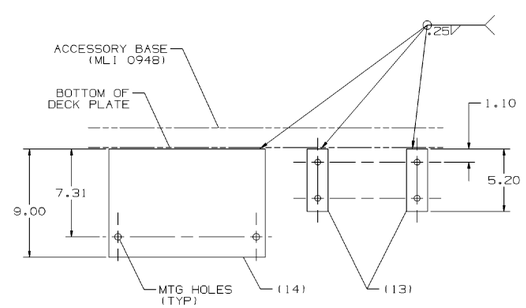

SECTION A-4 (D-6)
(SUPPORT PLATES SHOWN)

THIRD ANGLE PROJECTION

GENERAL ELECTRIC COMPANY GE Power Generation	SIZE	CAGE CODE	DWG NO
DRAWN M.B.NEIKIRK 00-07-20	E		116E3253
ISSUED M.B.NEIKIRK 00-08-04	SCALE NONE		SHEET 2

SIZE	DWG NO	SH	REV
E	116E3253	3	B

REVISIONS

REV	DESCRIPTION	DATE	APPROVED
B	AN 00023004, OCR F09201 & Y03151; ADD FIND #106 TO VARIOUS CALLOUTS TERESA MILLWOOD	00-12-04 TAM	LDK TAG

REVISE ON CAD ONLY
UG PART: G57078-0908-A0001
(SPEC: 116E3253)

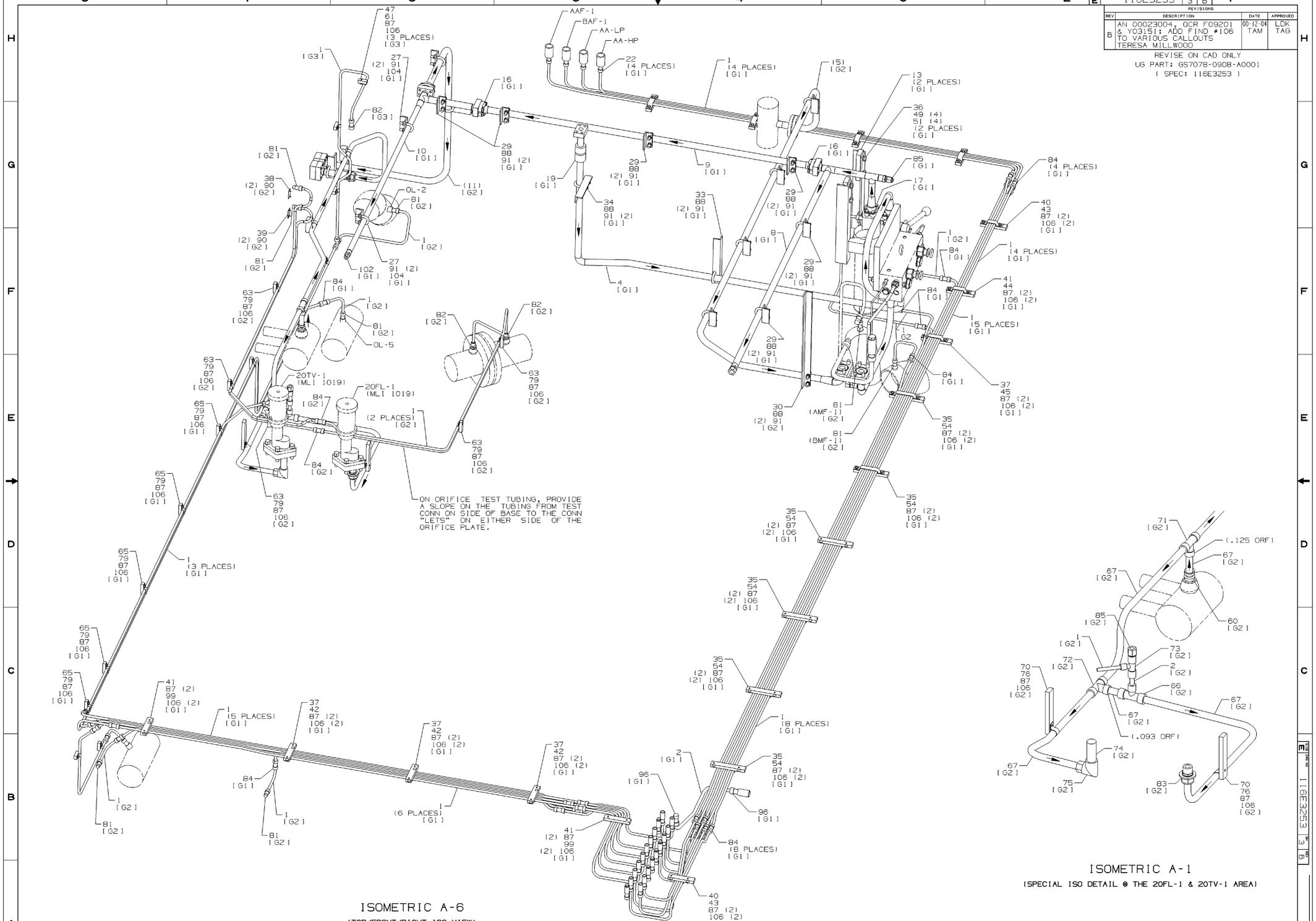

THIRD ANGLE PROJECTION

GENERAL ELECTRIC COMPANY (USA) Greenville, SC GE Power Generation	SIZE	CAGE CODE	DWG NO
	E		116E3253
DRAWN M.B.NEIKIRK 00-07-20			
ISSUED M.B.NEIKIRK 00-08-04	SCALE NONE		SHEET 3

SIZE	DWG NO	SH	REV
E	116E3253	4	B

REVISIONS

REV	DESCRIPTION	DATE	APPROVED
B	AN 00023004, QCR F09201 & Y03151; ADD FIND #106 TO VARIOUS CALLOUTS TERESA MILLWOOD	00-12-04 TAM	LDK TAG

REVISE ON CAD ONLY
UG PART: GS707B-0908-A0001
(SPEC: 116E3253)

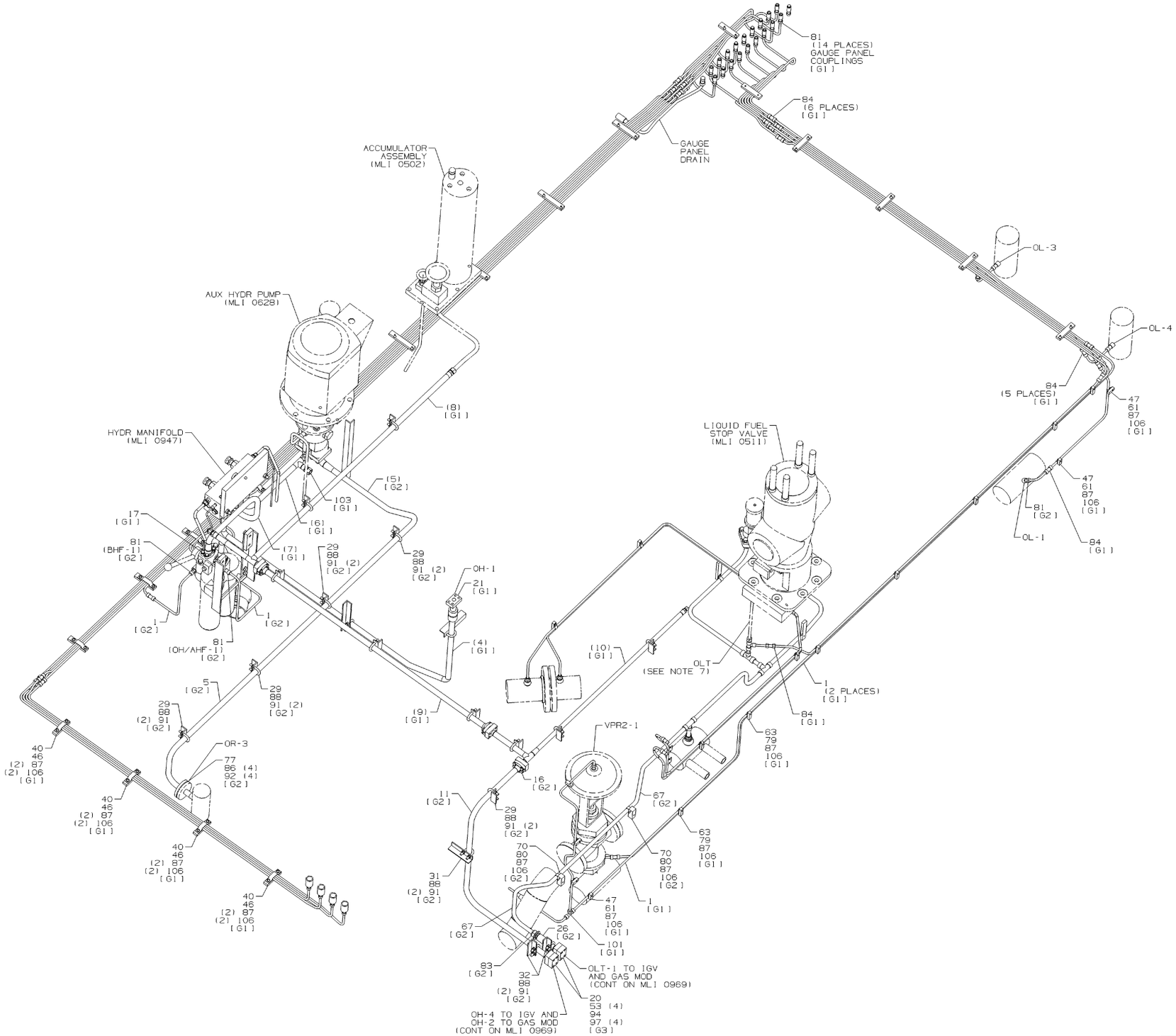

ISOMETRIC A-5

(TOP/BACK/LEFT ISO VIEW)

GENERAL ELECTRIC COMPANY SCHENECTADY, N.Y. GE Power Generation	SIZE E	CAGE CODE	DWG NO 116E3253
DRAWN M.B.NEIKIRK 00-07-20			
ISSUED M.B.NEIKIRK 00-08-04	SCALE NONE		SHEET 4

SIZE	DWG NO	SH	REV
E	116E3253	5	–

REVISIONS

REV	DESCRIPTION	DATE	APPROVED

REVISE ON CAD ONLY
UG PART: GS7078-0908-A0001
(SPEC: 116E3253)

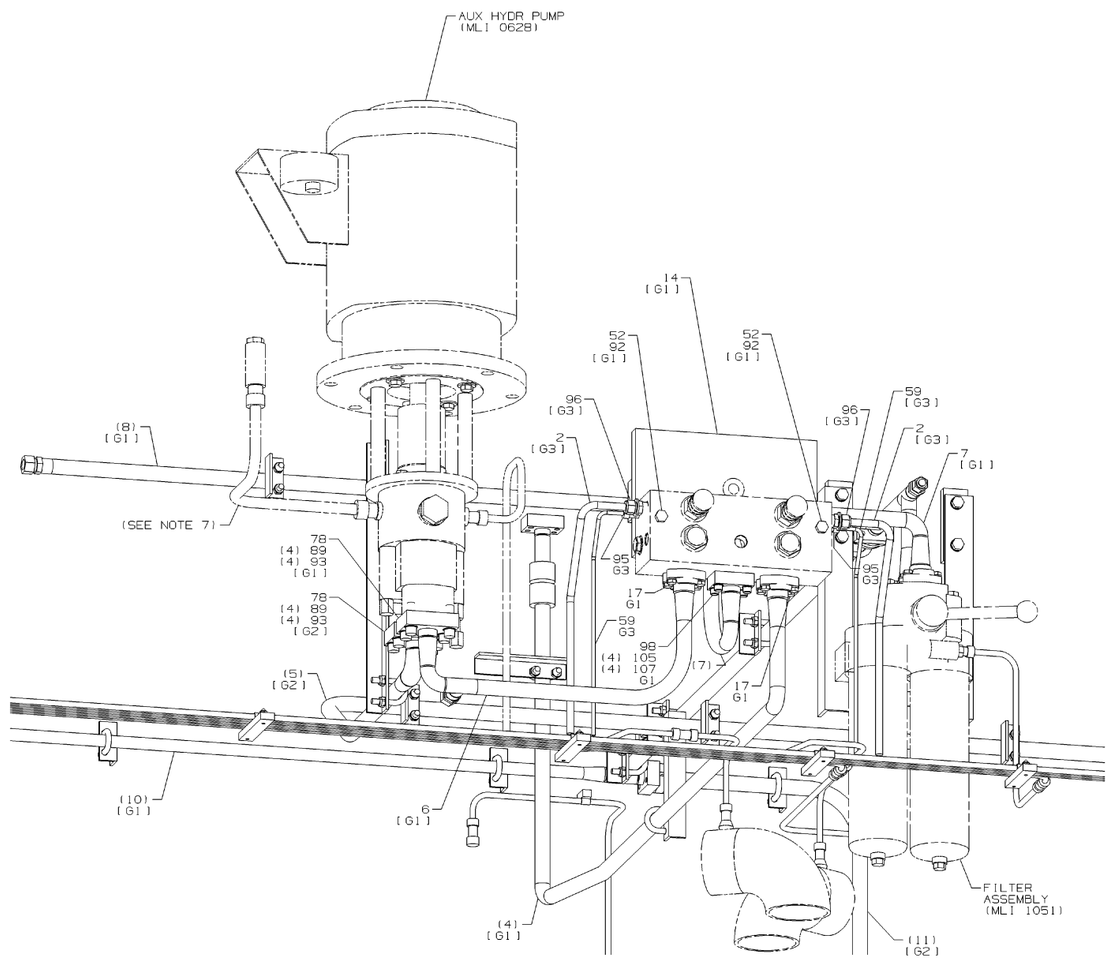

ISOMETRIC A-5

(SPECIAL ISO DETAIL @ THE HYDR MANIFOLD AREA)

GENERAL ELECTRIC COMPANY Greenville, SC GE Power Generation	SIZE E	CAGE CODE	DWG NO 116E3253
DRAWN M.B.HEIKIRK 00-07-23			
ISSUED M.B.HEIKIRK 00-08-04	SCALE NONE		SHEET 5

SIZE E DWG NO 116E3253 SH 5 REV –

N° PLANO: AGM-02-0204-PLA-M-0016

NOTES:

1. PIPING APPLIED PRACTICES ARE PER 351A3700.
2. PIPING WELDS ARE PER P8A-AG3, FIGURE PER APPENDIX II, FILLER METAL COLUMN AE-L PER APPENDIX I.
3. STRUCTURAL WELDS ARE PER P8A-AG1, FIGURE PER APPENDIX III, FILLER METAL COLUMN AE-L PER APPENDIX II.
4. TORQUE BOLTS AND STUDS PER 248A4158.
5. TUBE ASSEMBLY AND FITTINGS TO BE PER ITEM 4.
6. REMOVE SECTION FROM HOLE TO OUTSIDE FLANGE ON BASE, INSTALL PIPING AND SHAPE SECTION REMOVED AS REQUIRED TO BE WELDED BACK INTO BASE.
7. WELD SUPPORT (FIND NO 14) TO BASE AFTER PIPING IS COMPLETE.
8. PIPE AND TUBE SUPPORTS TO BE CUT AS REQUIRED AT FINAL ASSEMBLY.
9. FLEXHOSES SHALL BE INSTALLED IN A STRAIN FREE CONDITION.
10. GENERAL MACHINING APPLIED PRACTICES ARE PER 348A9200.
11. CLEAN AND PAINT PER MLI 0108.
12. PRESSURE TAPS THAT FACILITATE THE READING OF DIFFERENTIAL PRESSURE ACROSS CONICAL STRAINERS LOCATED UPSTREAM OF FUEL PUMP AND FLOW DIVIDER, DURING ACCESSORY BASE TEST.
13. SYSTEM PARAMETERS AND SPECIFICATIONS ARE BASED ON TYPICAL REQUIREMENTS FOR 7EA DLN 1.0 DUAL FUEL SYSTEMS AND CUSTOMER SCOPE OF WORK.
14. THIS DRAWING IS A REPRESENTATION OF DUAL FUEL CONFIGURATION WHICH INCLUDES ORIGINAL, MODIFIED, AND NEW EQUIPMENT.

IMPORTANTE

ESTE PLANO FUE ELABORADO EN AUTOCAD V.2008
CUALQUIER MODIFICACION REALIZADA EN CAMPO DEBERA SER NOTIFICADO A LA UNIDAD RESPONSABLE.
QUEDA PROHIBIDO CORREGIR ESTE PLANO SIN AUTORIZACION DE ESTA UNIDAD.

ALL DIMENSIONS IN BRACKETS [ ] ARE MILLIMETER, EXPRESSED DIMENSIONS ARE INCHES

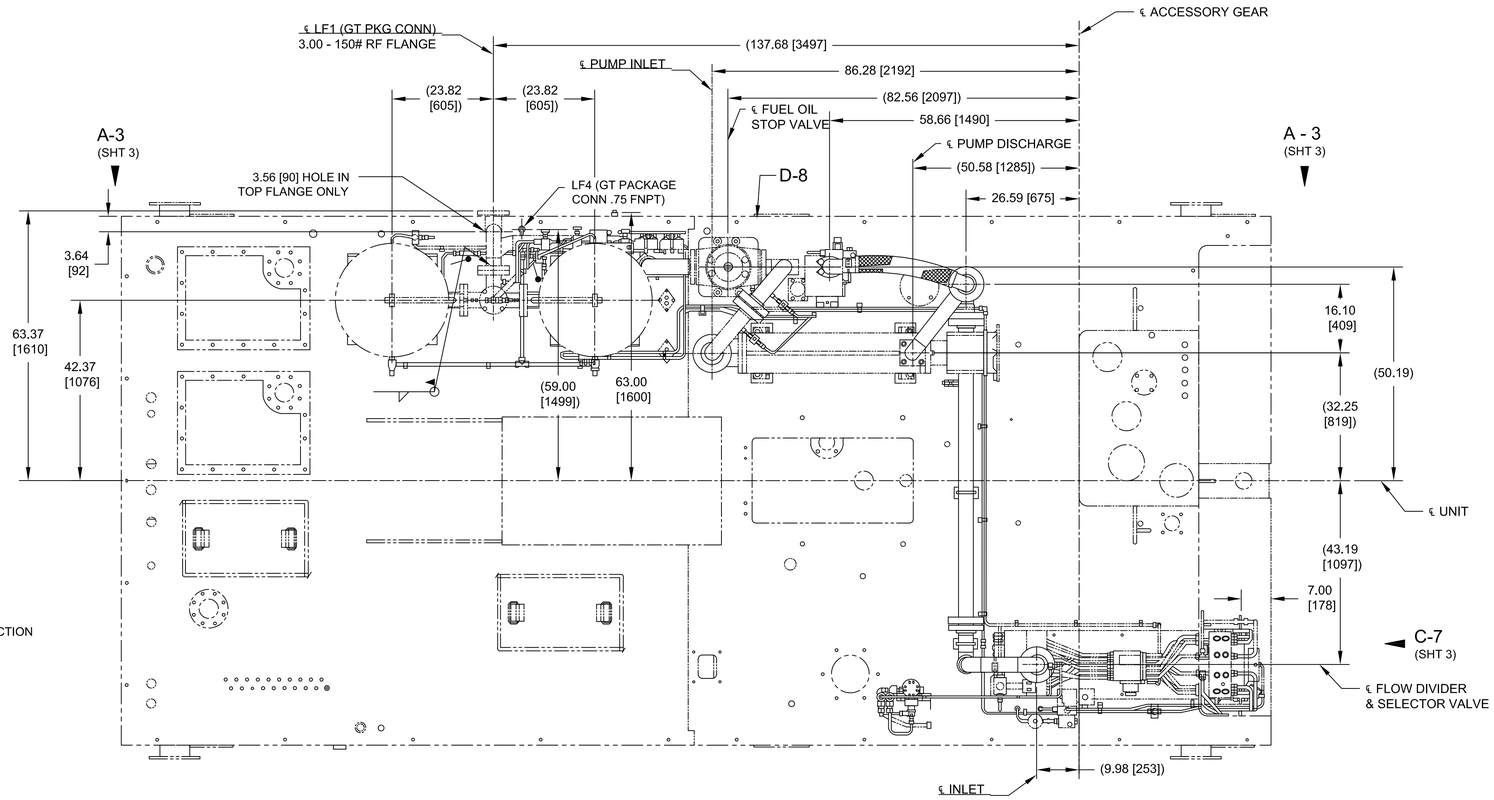

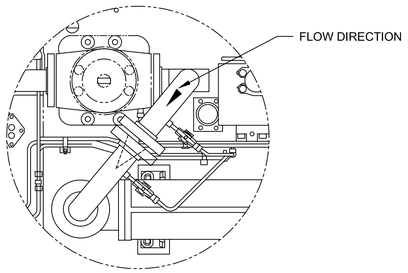

DETAIL: D-8
DEPICTING STRAINER ORIENTATION

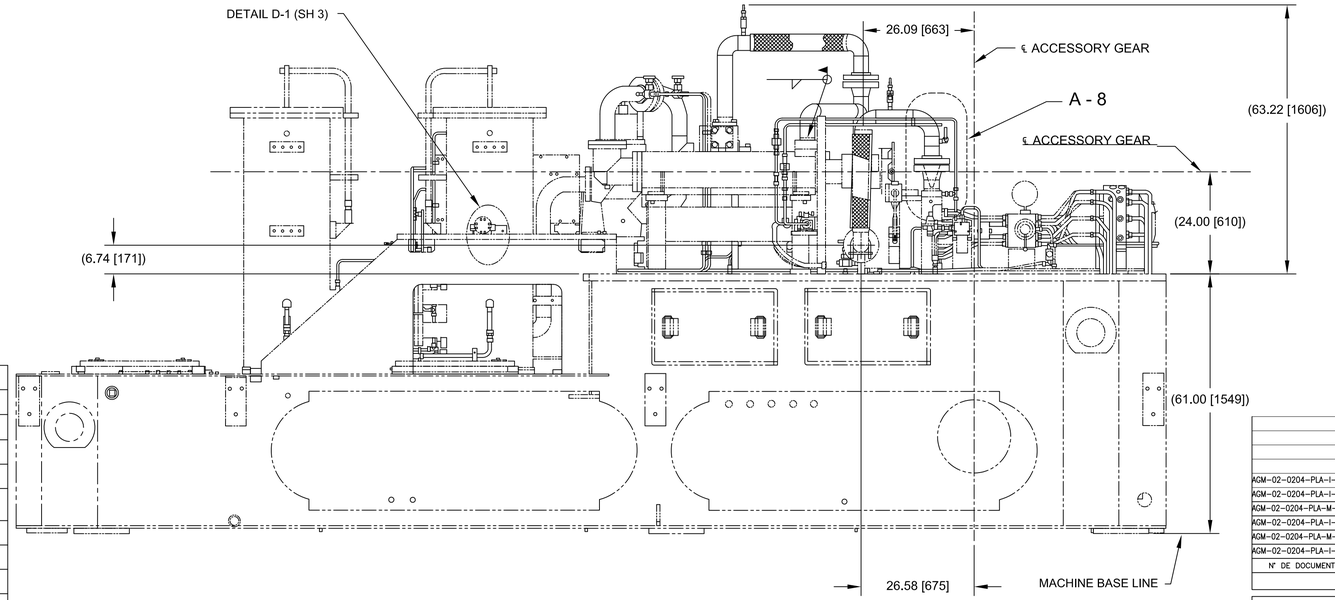

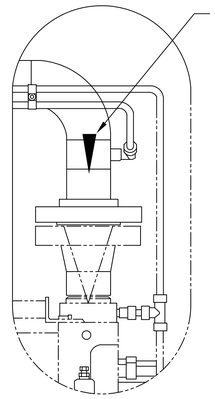

DETAIL: D-8
DEPICTING STRAINER ORIENTATION

PARTS LIST

ITEM	QTY	DEVICE No	DECSRIPTION	VENDOR/MODEL
1	1	VC3-1 / VR4-1	LF BYPASS VALVE / RELIEF VALVE	YOUNG & FRANKLIN / 7552E100-G001
2	1	65FP-1	LF BYPASS SERVO VALVE	MOOG / 6771K208**
3	1	FH3-1	LF BYPASS SERVO FILTER	YOUNG & FRANKLIN / 7735D100-G001
4	1	FF1-1 FF1-2	LF DUPLEX FILTERS	HILLIARD / 32718-571465006
5	1	VM5-1	LF FILTER TRANSFER VALVE	HILLIARD / F-0308-150-005
6	1	PF1-1	MAIN FUEL PUMP	COLFAX - IMO / K12DHZ-312P
7	1	VS1-1 / VS4-1	MAIN LF STOP VALVE & HYD TRIP	YOUNG & FRANKLIN / 733E100G00IRF
8	2	33FL-1 33FL-2	MAIN LF STOP VALVE LIMIT SWITCH	HIS / 62105-3
9	4	63LF-1 63LF-2 63LF-8 63LF-9	PRESSURE SWITCH	SOR / 101 SERIES
10	1	FD1-1	FLOW DIVIDER	ROPER INDUSTRIES / FIG 20095 TYPE 19
11	1	VPR53-2	REGULATOR	FISCHER / 1301F
12	3	77FD-1 77FD-2 77FD-3	SPEED PICK UPS	AL TEK / 10085-1010-403

REV.	FECHA	REVISIONES O MODIFICACIONES	DIBUJO	REVISO	APROBO
0	15/07/11	ISSUED FOR CONSTRUCTION	SAB	CB	TK

REF. FABRICANTE		
REF. FABRICANTE	FABRICANTE	O/C:

N° DE DOCUMENTO	DESCRIPCIÓN	REV.	FECHA
AGM-02-0204-PLA-I-0017	LIQUID FUELPANEL ASSEMBLY		
AGM-02-0204-PLA-I-0046	DEVICE SUMMARY (MLI 0414)		
AGM-02-0204-PLA-M-0028	LIQUID FUEL TUBING INTERCONNECT (MLI 0969C)		
AGM-02-0204-PLA-I-0015	FLOW DIVIDER (MLI 0910)		
AGM-02-0204-PLA-M-0007	FUEL PUMP ARRANGEMENT (MLI 0510)		
AGM-02-0204-PLA-I-0006	FLOW DIVIDER & MAG PICKUP (MLI 0508)		

DOCUMENTOS DE REFERENCIA

DERWICK · ProEnergy SERVICES · CORPOELEC · La Electricidad de Caracas · SENECA

AMPLIACIÓN DE LA CAPACIDAD DE GENERACIÓN Y TRANSPORTE DE ELECTRICIDAD EN LA ISLA DE MARGARITA

LIQUID FUEL PIPING ARRANGEMENT
DUAL FUEL MOD. UNITS 298034 & 298035
(MLI 0910B)

PLANO N°:	REV:		
PROYECTO N°: 409-2956-1			
CALCULO:	PROYECTO:	ESCALA: NONE	PLANO No:
REVISADO: C. Brown	CALCULO:	FECHA: 15/07/11	AGM-02-0204-PLA-M-0016
DIBUJO: S. Boerckel	REVISADO: J. Castillo	DISK. N°	
APROBADO: T. Koontz	DIBUJO:	ESC./PLOTEO:	
ARCHIVO:	APROBADO: M. Monticelli	ARCHIVO:	PAGINA: 1 DE: 4 REV. 0

F_A1_11 – 841x594mm

LINEA DE CORTE DE ORIGINAL
LINEA DE CORTE DE COPIA

0 — N° PLANO: AGM-02-0204-PLA-M-0016

IMPORTANTE

ESTE PLANO FUE ELABORADO EN AUTOCAD V.2008
CUALQUIER MODIFICACION REALIZADA EN CAMPO
DEBERA SER NOTIFICADO A LA UNIDAD
RESPONSABLE.
QUEDA PROHIBIDO CORREGIR ESTE PLANO SIN
AUTORIZACION DE ESTA UNIDAD.

ALL DIMENSIONS IN BRACKETS [ ] ARE
MILLIMETER; EXPRESSED DIMENSIONS
ARE INCHES

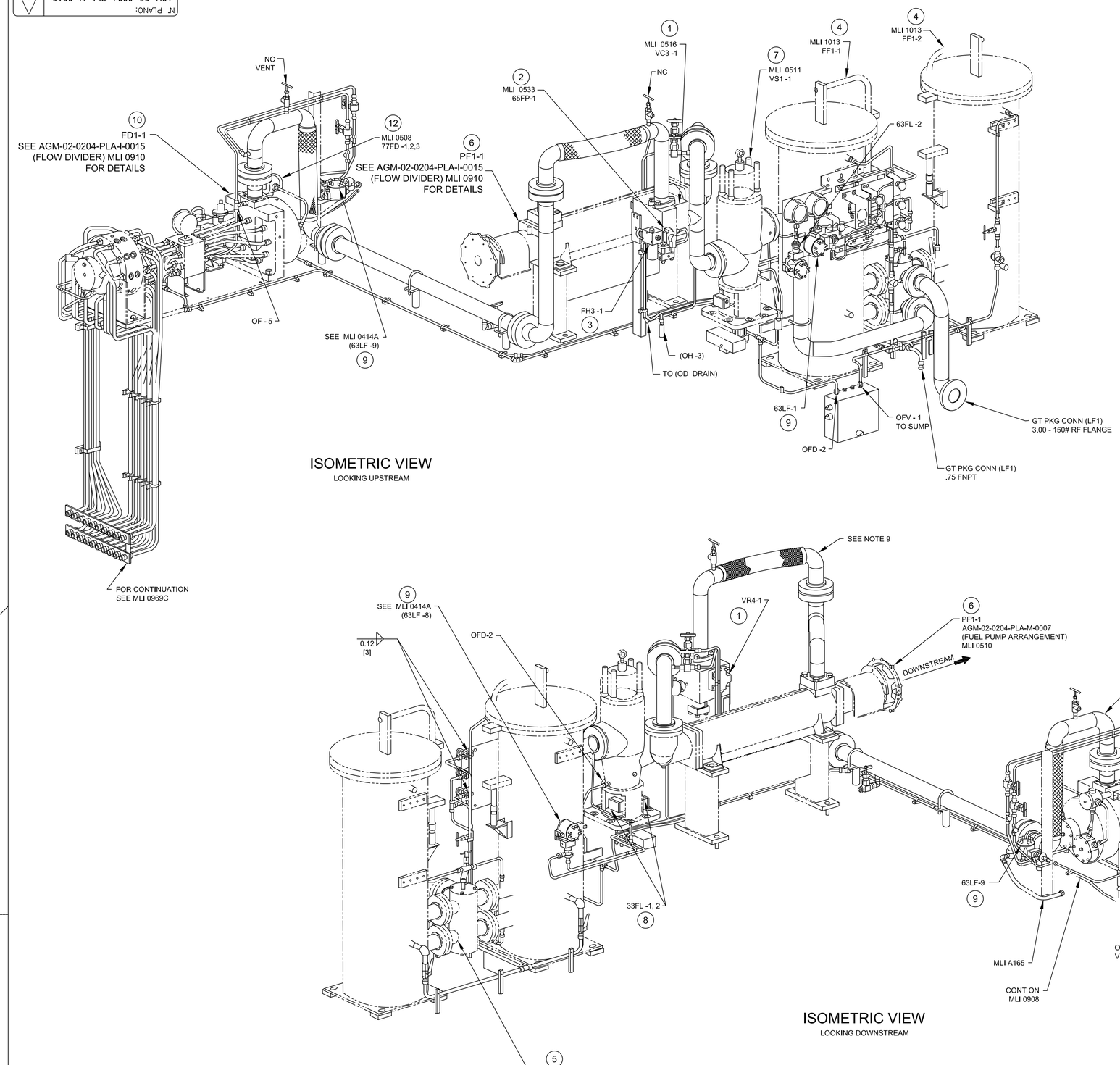

ISOMETRIC VIEW

LOOKING UPSTREAM

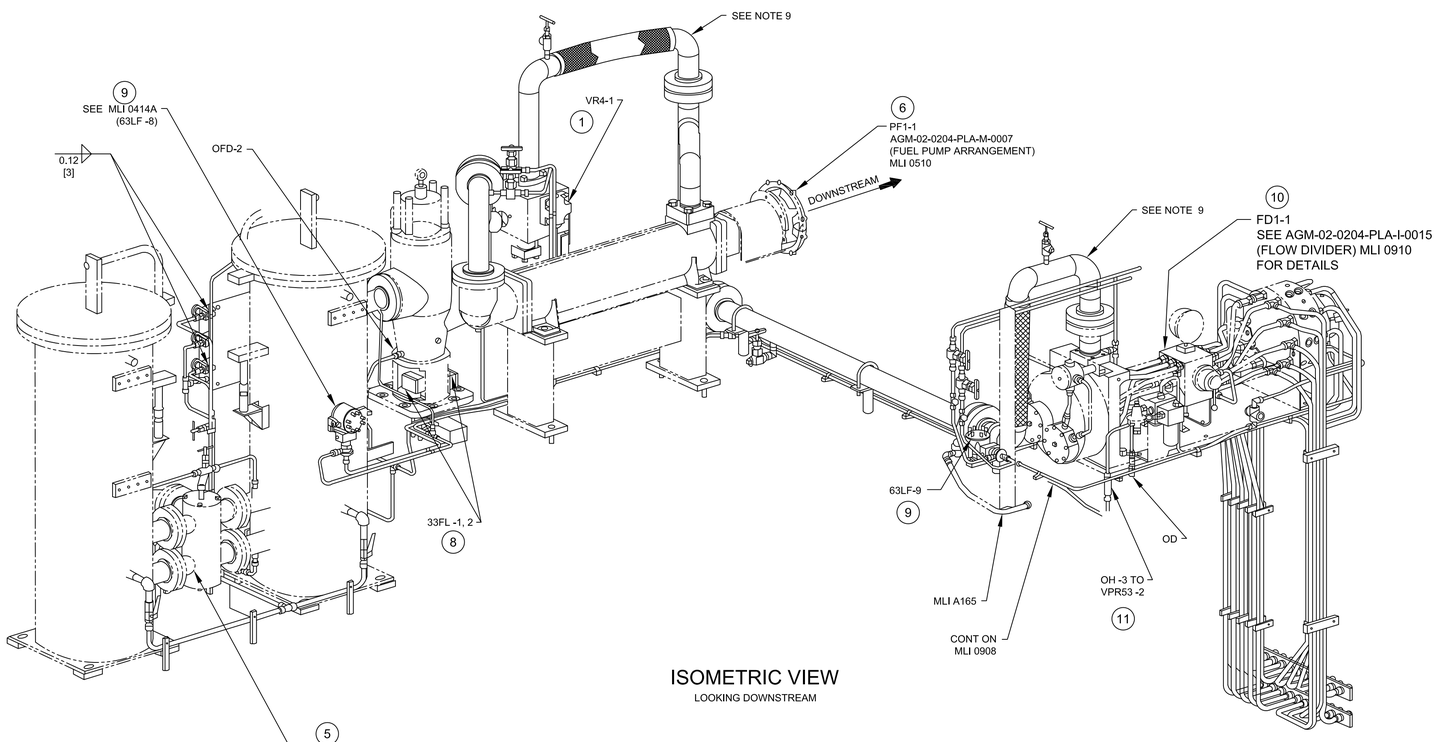

ISOMETRIC VIEW

LOOKING DOWNSTREAM

REV.	FECHA	REVISIONES O MODIFICACIONES	DIBUJO	REVISO	APROBO
0	15/07/11	ISSUED FOR CONSTRUCTION	SAB	CB	TK

REF. FABRICANTE		
REF. FABRICANTE	FABRICANTE	O/C:

N° DE DOCUMENTO	DESCRIPCIÓN	REV.	FECHA
AGM-02-0204-PLA-I-0017	LIQUID FUELPANEL ASSEMBLY		
AGM-02-0204-PLA-I-0046	DEVICE SUMMARY (MLI 0414)		
AGM-02-0204-PLA-M-0028	LIQUID FUEL TUBING INTERCONNECT (MLI 0969C)		
AGM-02-0204-PLA-I-0015	FLOW DIVIDER (MLI 0910)		
AGM-02-0204-PLA-M-0007	FUEL PUMP ARRANGEMENT (MLI 0510)		
AGM-02-0204-PLA-I-0006	FLOW DIVIDER & MAG PICKUP (MLI 0508)		

DOCUMENTOS DE REFERENCIA

DERWICK — ProEnergy SERVICES — CORPOELEC — La Electricidad de Caracas — GERENCIA FUNCIONAL DE INGENIERIA Y PROYECTOS — SENECA

AMPLIACIÓN DE LA CAPACIDAD DE GENERACIÓN Y TRANSPORTE DE ELECTRICIDAD EN LA ISLA DE MARGARITA

LIQUID FUEL PIPING ARRANGEMENT
DUAL FUEL MOD. UNITS 298034 & 298035
(MLI 0910B)

PLANO N°:	REV:		
PROYECTO N°: 409-2956-1			
CALCULO:	PROYECTO:	ESCALA: NONE	PLANO No: AGM-02-0204-PLA-M-0016
REVISADO: C. Brown	CALCULO:	FECHA: 15/07/11	
DIBUJO: S. Boerckel	REVISADO: J. Castillo	DISK. N°	
APROBADO: T. Koontz	DIBUJO:	ESC./PLOTEO:	
ARCHIVO:	APROBADO: M. Monticelli	ARCHIVO:	PAGINA: 2 DE: 4 — REV. 0

F_A1_11 – 841x594mm

LINEA DE CORTE DE COPIA
LINEA DE CORTE DE ORIGINAL

LINEA DE CORTE DE ORIGINAL
LINEA DE CORTE DE COPIA

N° PLANO: AGM-02-0204-PLA-M-0016 | 0

IMPORTANTE

ESTE PLANO FUE ELABORADO EN AUTOCAD V.2008
CUALQUIER MODIFICACION REALIZADA EN CAMPO
DEBERA SER NOTIFICADO A LA UNIDAD
RESPONSABLE.
QUEDA PROHIBIDO CORREGIR ESTE PLANO SIN
AUTORIZACION DE ESTA UNIDAD.

ALL DIMENSIONS IN BRACKETS [ ] ARE MILLIMETER, EXPRESSED DIMENSIONS ARE INCHES

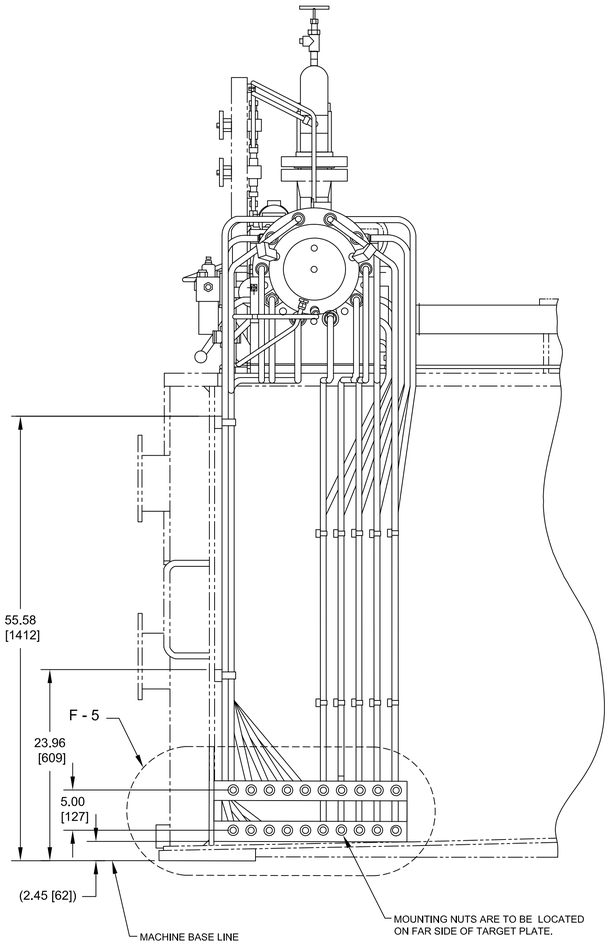

VIEW: C-7 (SHT 1)
(ROTATED 90° CW)

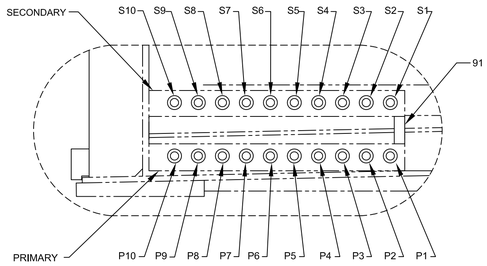

DETAIL: F-5
TUBING REMOVED FOR CLARITY

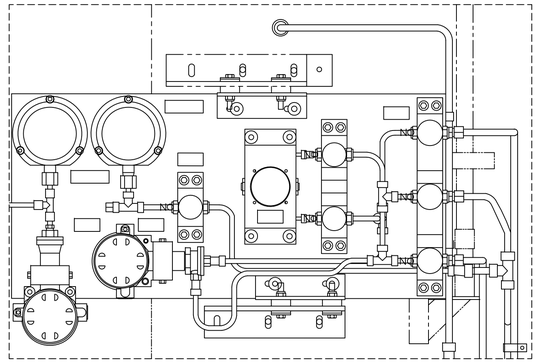

DETAIL: E-3
(AGM-02-0204-PLA-I-0017)

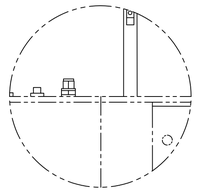

DETAIL: E-5

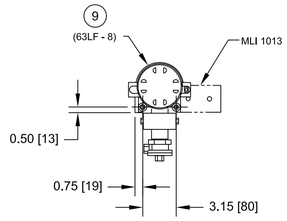

DETAIL: D-1 (SH 1)

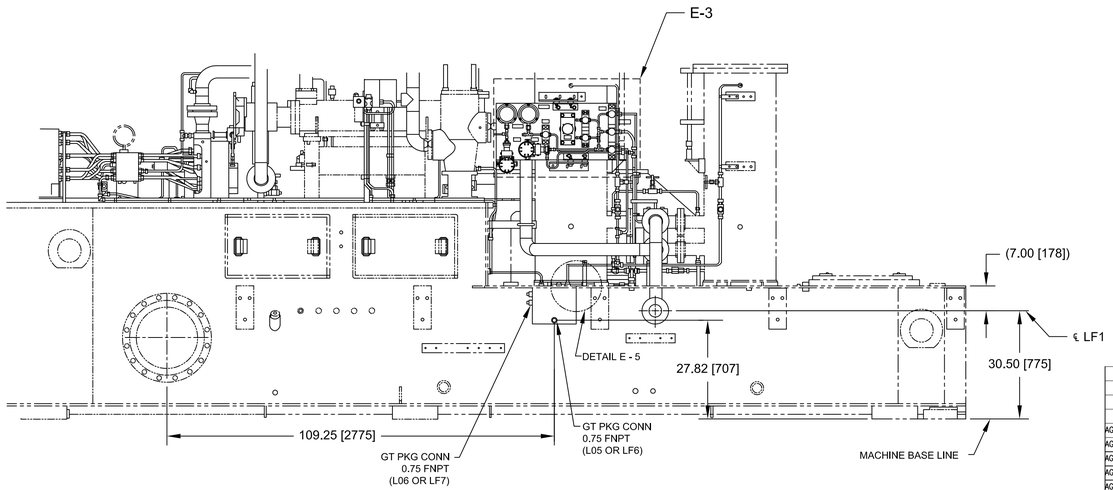

VIEW: A-3 (SHT 1)
(ROTATED 180° CW)

N° DE DOCUMENTO	DESCRIPCIÓN	REV.	FECHA
AGM-02-0204-PLA-I-0017	LIQUID FUELPANEL ASSEMBLY		
AGM-02-0204-PLA-I-0046	DEVICE SUMMARY (MLI 0414)		
AGM-02-0204-PLA-M-0028	LIQUID FUEL TUBING INTERCONNECT (MLI 0969C)		
AGM-02-0204-PLA-I-0015	FLOW DIVIDER (MLI 0910)		
AGM-02-0204-PLA-M-0007	FUEL PUMP ARRANGEMENT (MLI 0510)		
AGM-02-0204-PLA-I-0006	FLOW DIVIDER & MAG PICKUP (MLI 0508)		

DOCUMENTOS DE REFERENCIA

REV.	FECHA	REVISIONES O MODIFICACIONES	DIBUJO	REVISO	APROBO
0	15/07/11	ISSUED FOR CONSTRUCTION	SAB	CB	TK

REF. FABRICANTE		
REF. FABRICANTE	FABRICANTE	O/C:

DERWICK ASSOCIATES CORP. | ProEnergy SERVICES | CORPOELEC CORPORACIÓN ELÉCTRICA NACIONAL | La Electricidad de Caracas | GERENCIA FUNCIONAL DE INGENIERÍA Y PROYECTOS | SENECA

AMPLIACIÓN DE LA CAPACIDAD DE GENERACIÓN Y TRANSPORTE DE ELECTRICIDAD EN LA ISLA DE MARGARITA

LIQUID FUEL PIPING ARRANGEMENT
DUAL FUEL MOD. UNITS 298034 & 298035
(MLI 0910B)

PLANO N°:	REV:		
PROYECTO N°: 409-2956-1			
CALCULO:	PROYECTO:	ESCALA: NONE	PLANO No: AGM-02-0204-PLA-M-0016
REVISADO: C. Brown	CALCULO:	FECHA: 15/07/11	
DIBUJO: S. Boerckel	REVISADO: J. Castillo	DISK. N°	
APROBADO: T. Koontz	DIBUJO:	ESC./PLOTEO:	
ARCHIVO:	APROBADO: M. Monticelli	ARCHIVO:	PAGINA: 3 DE: 4 — REV. 0

F_A1_11 – 841x594mm

LINEA DE CORTE DE COPIA
LINEA DE CORTE DE ORIGINAL

LINEA DE CORTE DE ORIGINAL
LINEA DE CORTE DE COPIA

N° PLANO: AGM-02-0204-PLA-M-0016 | 0

IMPORTANTE

ESTE PLANO FUE ELABORADO EN AUTOCAD V.2008
CUALQUIER MODIFICACION REALIZADA EN CAMPO DEBERA SER NOTIFICADO A LA UNIDAD RESPONSABLE.
QUEDA PROHIBIDO CORREGIR ESTE PLANO SIN AUTORIZACION DE ESTA UNIDAD.

ALL DIMENSIONS IN BRACKETS [ ] ARE MILLIMETER, EXPRESSED DIMENSIONS ARE INCHES

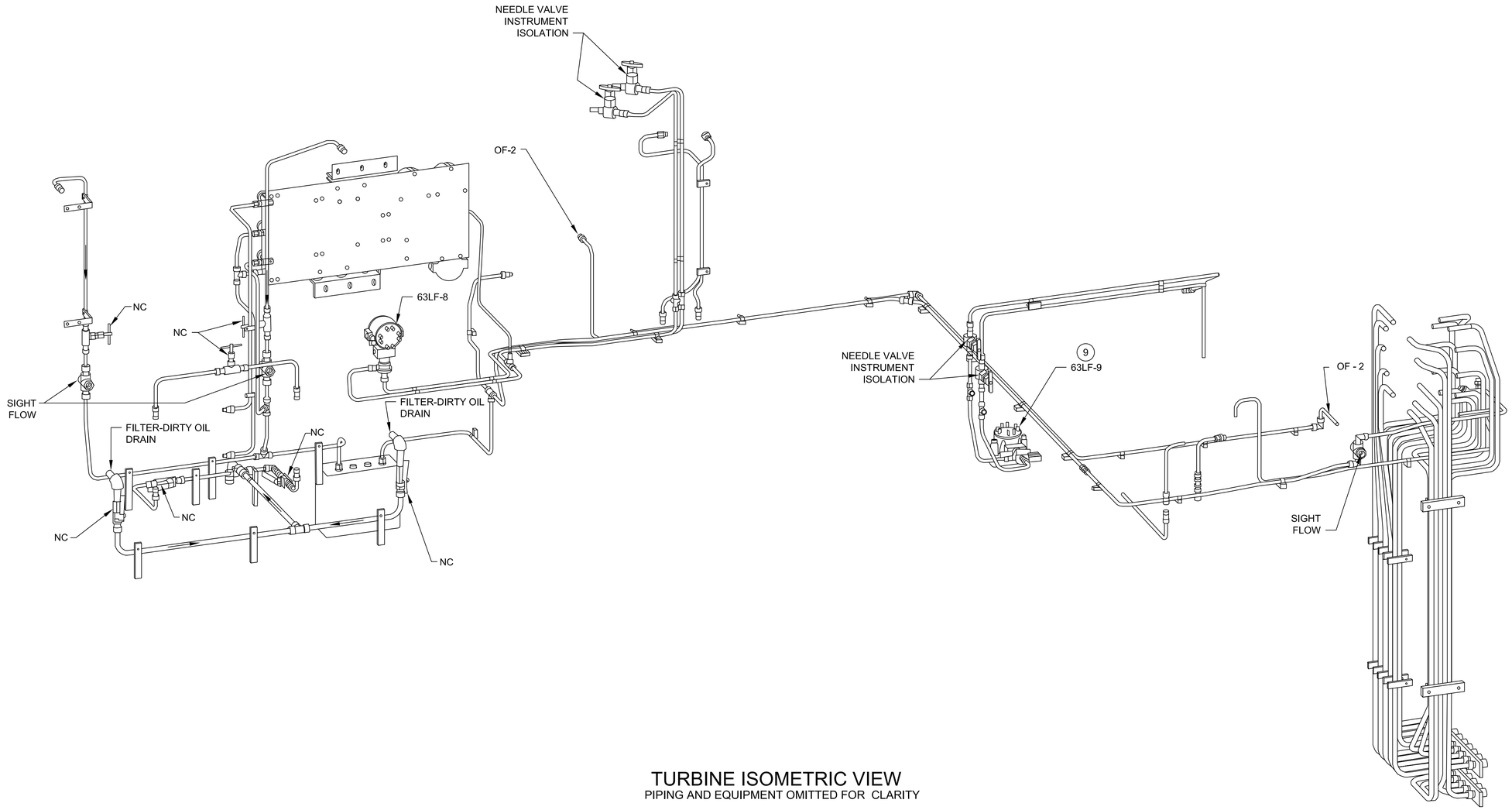

TURBINE ISOMETRIC VIEW

PIPING AND EQUIPMENT OMITTED FOR CLARITY

N° DE DOCUMENTO	DESCRIPCIÓN	REV.	FECHA
AGM-02-0204-PLA-I-0017	LIQUID FUELPANEL ASSEMBLY		
AGM-02-0204-PLA-I-0046	DEVICE SUMMARY (MLI 0414)		
AGM-02-0204-PLA-M-0028	LIQUID FUEL TUBING INTERCONNECT (MLI 0969C)		
AGM-02-0204-PLA-I-0015	FLOW DIVIDER (MLI 0910)		
AGM-02-0204-PLA-M-0007	FUEL PUMP ARRANGEMENT (MLI 0510)		
AGM-02-0204-PLA-I-0006	FLOW DIVIDER & MAG PICKUP (MLI 0508)		

DOCUMENTOS DE REFERENCIA

REV.	FECHA	REVISIONES O MODIFICACIONES	DIBUJO	REVISO	APROBO
0	15/07/11	ISSUED FOR CONSTRUCTION	SAB	CB	TK

REF. FABRICANTE		
REF. FABRICANTE	FABRICANTE	O/C:

DERWICK ASSOCIATES CORP. | ProEnergy SERVICES | CORPOELEC | La Electricidad de Caracas | SENECA

AMPLIACIÓN DE LA CAPACIDAD DE GENERACIÓN Y TRANSPORTE DE ELECTRICIDAD EN LA ISLA DE MARGARITA

LIQUID FUEL PIPING ARRANGEMENT
DUAL FUEL MOD. UNITS 298034 & 298035
(MLI 0910B)

PLANO N°: | REV:
PROYECTO N°: 409-2956-1

CALCULO:	PROYECTO:	ESCALA: NONE	PLANO No: AGM-02-0204-PLA-M-0016
REVISADO: C. Brown	CALCULO:	FECHA: 15/07/11	
DIBUJO: S. Boerckel	REVISADO: J. Castillo	DISK. N°	
APROBADO: T. Koontz	DIBUJO:	ESC./PLOTEO:	
ARCHIVO:	APROBADO: M. Monticelli	ARCHIVO:	PAGINA: 4 DE: 4 — REV. 0

F_A1_11 – 841x594mm

LINEA DE CORTE DE COPIA
LINEA DE CORTE DE ORIGINAL

N° PLANO: AGM-02-0204-PLA-M-0018

0

IMPORTANTE

ESTE PLANO FUE ELABORADO EN AUTOCAD V.2008
CUALQUIER MODIFICACION REALIZADA EN CAMPO DEBERA SER NOTIFICADO A LA UNIDAD RESPONSABLE.
QUEDA PROHIBIDO CORREGIR ESTE PLANO SIN AUTORIZACION DE ESTA UNIDAD.

ALL DIMENSIONS IN BRACKETS [ ] ARE MILLIMETER, EXPRESSED DIMENSIONS ARE INCHES

NOTES:

1. GENERAL MACHINING APPLIED PRACTICES ARE PER 348A9200.
2. PIPING APPLIED PRACTICES ARE PER 351A3700.
3. PIPING WELDS ARE PER P8A-AG3, FILLER MATERIAL IS PER COLUMN AB UNLESS OTHERWISE SPECIFIED IN THIS DOCUMENT.
4. STRUCTURAL WELDS ARE PER P8A-AG1, FILLER MATERIAL IS PER COLUMN AB UNLESS OTHERWISE NOTED.
5. GROOVED PIPING PER 215A3050.
6. INSTALL AND SUPPORT TUBING PER 215A4435.
7. LUBRICATE ALL PIPE COUPLINGS BEFORE FINAL ASSEMBLY USING PART 38.
8. FASTEN CAPILLARY LINES TO MACHINE BASE EVERY 12" [305] WITH PART 47, 60 AND 69. (SEE SECTION D-11 COIL EXCESS LINE IN A SAFE PLACE USING PART 55.
9. CLEAN & PAINT PER MLI 0108.
10. DISASSEMBLE BULB AND WELL, AT END OF CAPILLARY LINES, FILL WITH PART 43 REASSEMBLE AND REMOVE EXCESS.
11. ALL PIPE SUPPORTS TO BE CUT AND NOTCHED TO FIT AT ASSEMBLY IF REQUIRED. WELDS TO BE .18 FILLET ALL AROUND UNLESS OTHERWISE MARKED.
12. CUT TO FIT PIPING AND SUPPORTS TO FIT WHERE INDICATE BY FIELD WELD.
13. ALL DIMENSIONS ARE REFERENCE UNLESS OTHERWISE SPECIFIED.
14. ALL PIPING TO BE INSTALLED IN A STRAIN FREE CONDITION.
15. AFTER FINAL WELDING OF ORIFICE FLANGES REMOVE PIPE PLUGS FROM PRESSURE TAPS AND DRILL THRU A .19 DIA HOLE (4 PLACES).
16. USE PREF IX 88 TO CONNECT TO MLI 969D.
17. ROTATE VALVES PART 36 AS REQUIRED TO ELIMINATE INTERFERENCE.
18. SYSTEM PARAMETERS AND SPECIFICATIONS ARE BASED ON GE DRAWING 119E1127 (PROVIDED BY CUSTOMER). INCLUDING REQUIREMENTS FOR DUAL FUEL SYSTEM PER CUSTOMER SCOPE OF WORK.

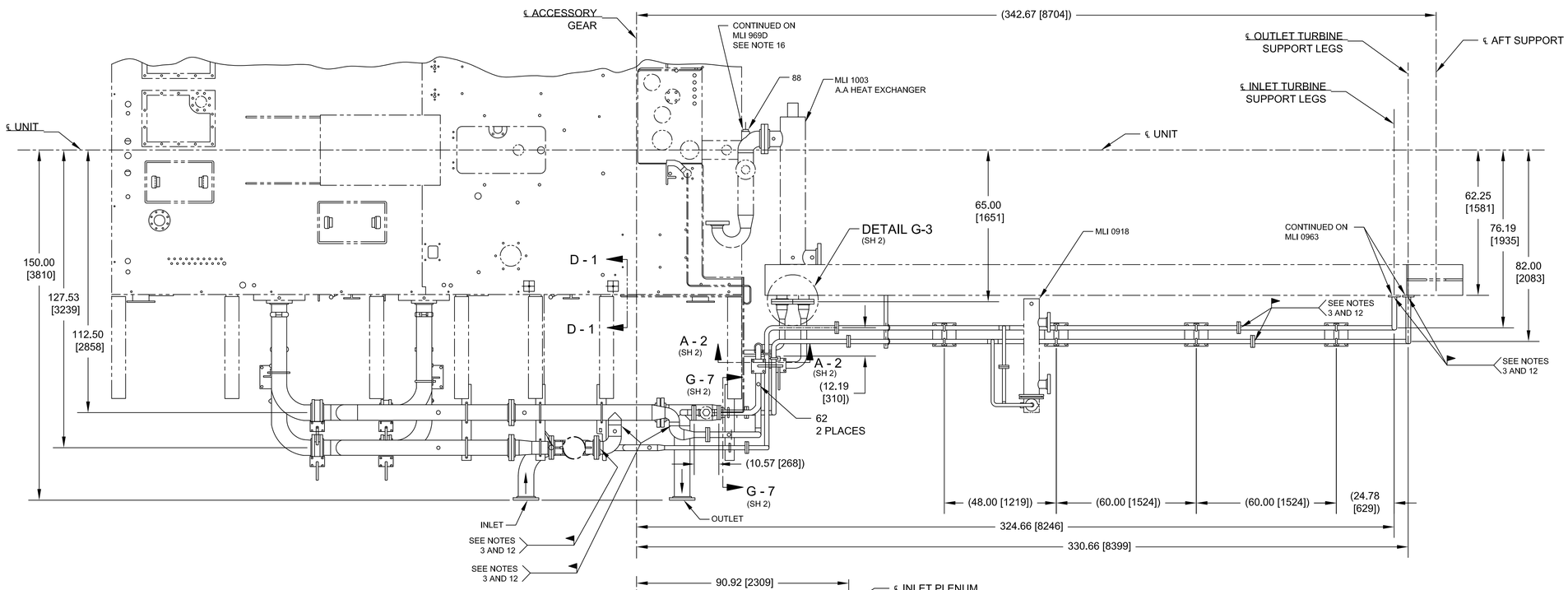

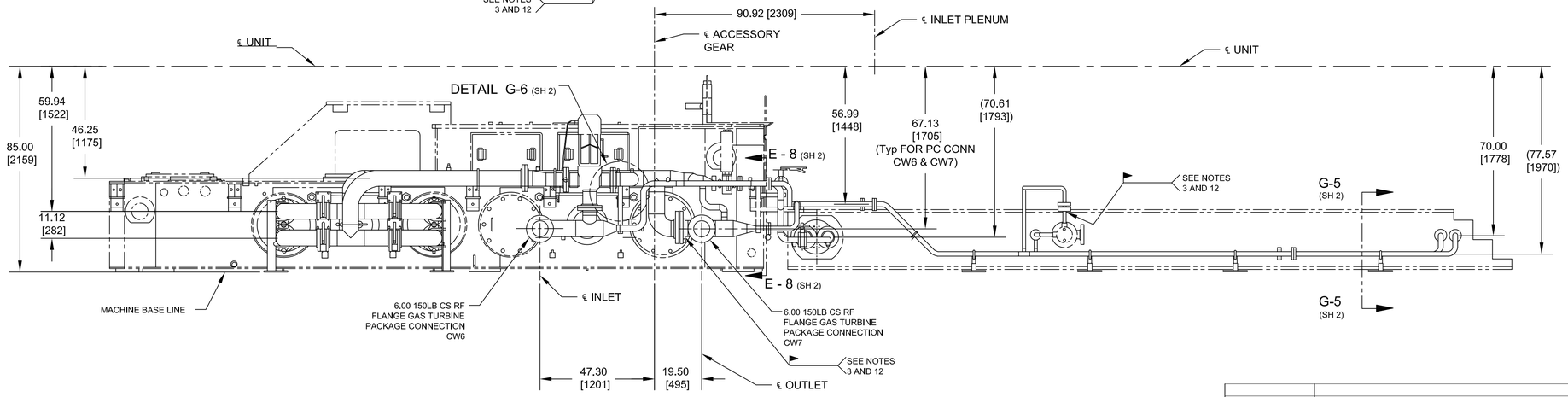

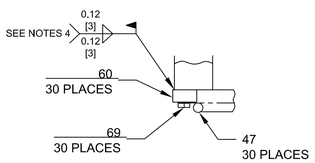

SECTION D-1
(SEE NOTE 8) (ENLARGED)

1					
2					
3					
4					
0	31/05/11	ISSUED FOR CONSTRUCTION	SAB	CB	TK
REV.	FECHA	REVISIONES O MODIFICACIONES	DIBUJO	REVISO	APROBO

REF. FABRICANTE		
REF. FABRICANTE	FABRICANTE	O/C:

N° DE DOCUMENTO	DESCRIPCIÓN	REV.	FECHA
AGM-02-0204-PLA-M-0029	ATOMIZING AIR INTERCONNECT (MLI 969D)		
AGM-02-0204-PLA-I-0019	FUEL NOZZLE PURGE PANEL ASSEMBLY (MLI 0918)		

DOCUMENTOS DE REFERENCIA

DERWICK · ProEnergy SERVICES · CORPOELEC · La Electricidad de Caracas · SENECA

AMPLIACIÓN DE LA CAPACIDAD DE GENERACIÓN Y TRANSPORTE DE ELECTRICIDAD EN LA ISLA DE MARGARITA

COOLING WATER – LUBE OIL
DUAL FUEL MOD. UNITS 298034 & 298035
(MLI 0914)

PLANO N°:	REV: 0		
PROYECTO N°: 409-2956-1			
CALCULO:	PROYECTO:	ESCALA: NONE	PLANO No:
REVISADO: C. Brown	CALCULO:	FECHA: 31/05/11	AGM-02-0204-PLA-M-0018
DIBUJO: S. Boerckel	REVISADO: J. Castillo	DISK. N°	
APROBADO: T. Koontz	DIBUJO:	ESC./PLOTEO:	
ARCHIVO:	APROBADO: M. Monticelli	ARCHIVO:	PAGINA: 1 DE: 2 REV. 0

F_A1_11 – 841x594mm

LINEA DE CORTE DE ORIGINAL
LINEA DE CORTE DE COPIA

LINEA DE CORTE DE ORIGINAL
LINEA DE CORTE DE COPIA

0 — N° PLANO: AGM-02-0204-PLA-M-0018

IMPORTANTE
ESTE PLANO FUE ELABORADO EN AUTOCAD V.2008
CUALQUIER MODIFICACION REALIZADA EN CAMPO DEBERA SER NOTIFICADO A LA UNIDAD RESPONSABLE.
QUEDA PROHIBIDO CORREGIR ESTE PLANO SIN AUTORIZACION DE ESTA UNIDAD.

ALL DIMENSIONS IN BRACKETS [ ] ARE MILLIMETER, EXPRESSED DIMENSIONS ARE INCHES

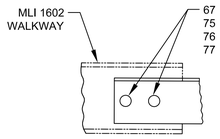

SECTION: G-7 (SH 1)
(4 PLACES) (ENLARGED)

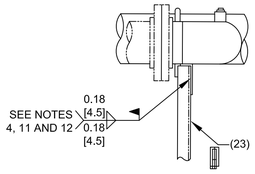

DETAIL: G-6 (SH 1)

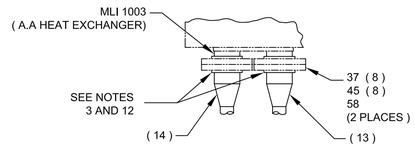

DETAIL: G-3 (SH 1)

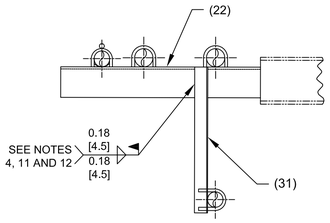

SECTION: E-8 (SH 1)
(ENLARGED)

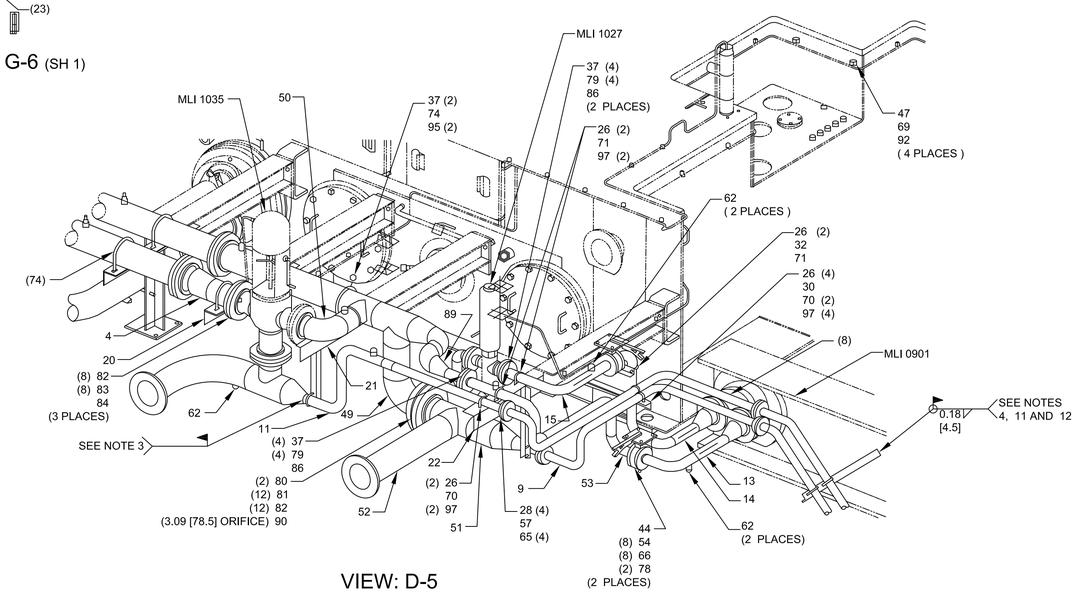

VIEW: D-5

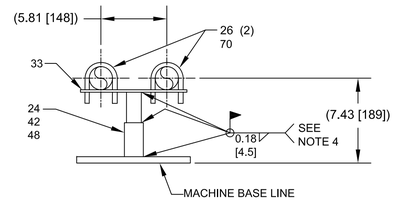

SECTION: G-5 (SH 1)
(4 PLACES) (ENLARGED)

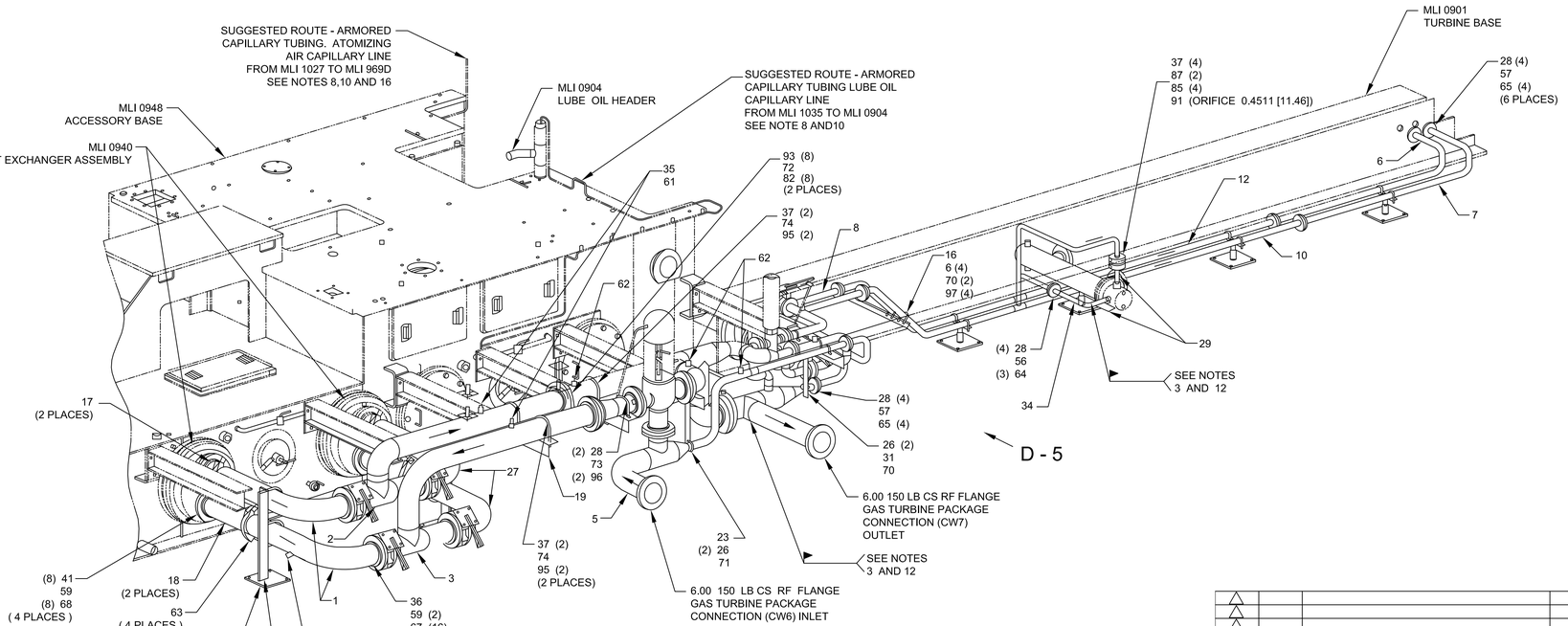

ISOMETRIC VIEW

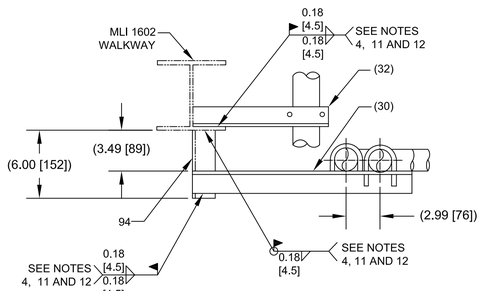

SECTION: A-2 (SH 1)
(ENLARGED)

N° DE DOCUMENTO	DESCRIPCIÓN		REV.	FECHA
AGM-02-0204-PLA-M-0029	ATOMIZING AIR INTERCONNECT	(MLI 969D)		
AGM-02-0204-PLA-I-0019	FUEL NOZZLE PURGE PANEL ASSEMBLY	(MLI 0918)		

DOCUMENTOS DE REFERENCIA

REV.	FECHA	REVISIONES O MODIFICACIONES	DIBUJO	REVISO	APROBO
0	31/05/11	ISSUED FOR CONSTRUCTION	SAB	CB	TK

REF. FABRICANTE		
REF. FABRICANTE	FABRICANTE	O/C:

DERWICK ASSOCIATES CORP. — ProEnergy SERVICES — CORPOELEC — La Electricidad de Caracas — GERENCIA FUNCIONAL DE INGENIERIA Y PROYECTOS SENECA

AMPLIACIÓN DE LA CAPACIDAD DE GENERACIÓN Y TRANSPORTE DE ELECTRICIDAD EN LA ISLA DE MARGARITA
COOLING WATER – LUBE OIL
DUAL FUEL MOD. UNITS 298034 & 298035
(MLI 0914)

PLANO N°:	REV:		
PROYECTO N°: 409-2956-1			
CALCULO:	PROYECTO:	ESCALA: NONE	PLANO No:
REVISADO: C. Brown	CALCULO:	FECHA: 31/05/11	AGM-02-0204-PLA-M-0018
DIBUJO: S. Boerckel	REVISADO: J. Castillo	DISK. N°	
APROBADO: T. Koontz	DIBUJO:	ESC./PLOTEO:	
ARCHIVO:	APROBADO: M. Monticelli	ARCHIVO:	PAGINA: 2 DE: 2 — REV. 0

F_A1_11 – 841x594mm

LINEA DE CORTE DE COPIA
LINEA DE CORTE DE ORIGINAL

0	N° PLANO: AGM-02-0204-PLA-M-0020

NOTES :

1. GENERAL MACHINING APPLIED PRACTICES ARE PER 348A9200.
2. PIPING APPLIED PRACTICES ARE PER 351A3700.
3. PIPING WELDS ARE PER P8A-AG3,FILLER MATERIAL IS PER COLUMN AE-L UNLESS OTHERWISE SPECIFIED IN.
4. STRUCTURAL WELDS ARE PER P8A-AGI, FILLER MATERIAL IS PER COLUMN AB UNLESS OTHERWISE NOTED.
5. INSTALL AND SUPPORT TUBING PER 215A4435.
6. TUBE RUNS ARE ILLUSTRATIVE ONLY.
7. FLOW DIRECTION IS DESIGNATED WITH AN ARROW SYMBOL.
8. VALVE ORIENTATIONS ARE SUGGESTED AND MAY BE ROTATED TO AVOID INTERFERENCES.
9. INSURE THE ACTUATOR STEM IS NOT DAMAGED DURING ASSEMBLY AND IS MASKED OFF WITH A NON - ADHESIVE TAPE BEFORE PAINTING.
10. LENGTHEN TUBE RUNS WHERE DENOTED FOR CANS 5, 7, AND 8 FOR ADDED THERMAL GROWTH RELIEF.
11. SYSTEM PARAMETERS AND SPECIFICATIONS ARE BASED ON TYPICAL REQUIREMENTS FOR 7EA DLN 1.0 DUAL FUEL SYSTEM AND CUSTOMER SCOPE OF WORK.
12. THIS DRAWING IS A REPRESENTATION OF DUAL FUEL CONFIGURATION WHICH INCLUDES ORIGINAL, MODIFIED, AND NEW EQUIPMENT.

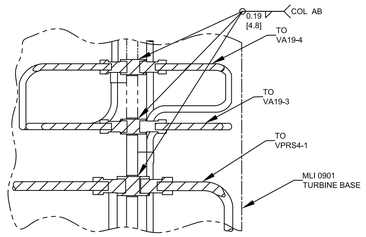

SECTION: F-5

PARTS LIST				
ITEM	QTY	DEVICE No.	DESCRIPTION	VENDOR/MODEL
1	3	SEE NOTE 1	3-WAY PURGE VALVE ASSEMBLY	JASC / 101254-1
2	2	SEE NOTE 1	3-WAY PURGE VALVE ASSEMBLY	JASC / 101254-2
3	3	SEE NOTE 1	3-WAY PURGE VALVE ASSEMBLY	JASC / 101254-3
4	2	SEE NOTE 1	3-WAY PURGE VALVE ASSEMBLY	JASC / 101254-4
5	3	VA19-1 VA19-2 VA33-1	3-WAY PURGE VALVE	CR-TEC / CRS352BT-1.5F
6	1	HX4-1	HEAT EXCHANGER-PURGA AIR	ITT / STANDARD 5-080-06-030-013
7	20	VCK2-21 to VCK2-30 VCK2-31 to VCK2-40	PURGE AIR CHECK VALVE	JASC / 101232
8	1	VA23-2	PURGE VALVE	CR-TEC / CRS733F-2F
9	2	VCK80-1 VCK80-2	COMPRESSION CHECK VALVE	SWAGELOK / SS-CHS8-10

NOTES:

1 3-WAY PURGE VALVE ASSEMBLY CONSIST OF THE FOLLOWING.
- A) 1 - MOUNTING BLOCK
- B) 1 - 3-WAY VALVE (VA19-3-1 to VA19-3-10) PRIMARY
- C) 1 - 3-WAY VALVE (VA19-4-1 to VA19-4-10) SECONDARY

I M P O R T A N T E

ESTE PLANO FUE ELABORADO EN AUTOCAD V.2008
CUALQUIER MODIFICACION REALIZADA EN CAMPO DEBERA SER NOTIFICADO A LA UNIDAD RESPONSABLE.
QUEDA PROHIBIDO CORREGIR ESTE PLANO SIN AUTORIZACION DE ESTA UNIDAD.

ALL DIMENSIONS IN BRACKETS [ ] ARE MILLIMETER, EXPRESSED DIMENSIONS ARE INCHES

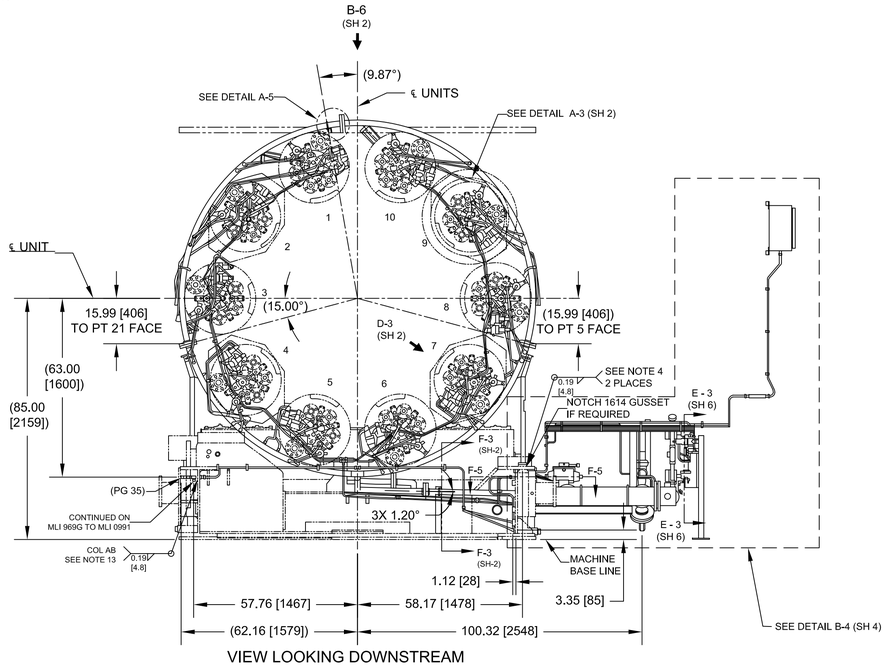

VIEW LOOKING DOWNSTREAM

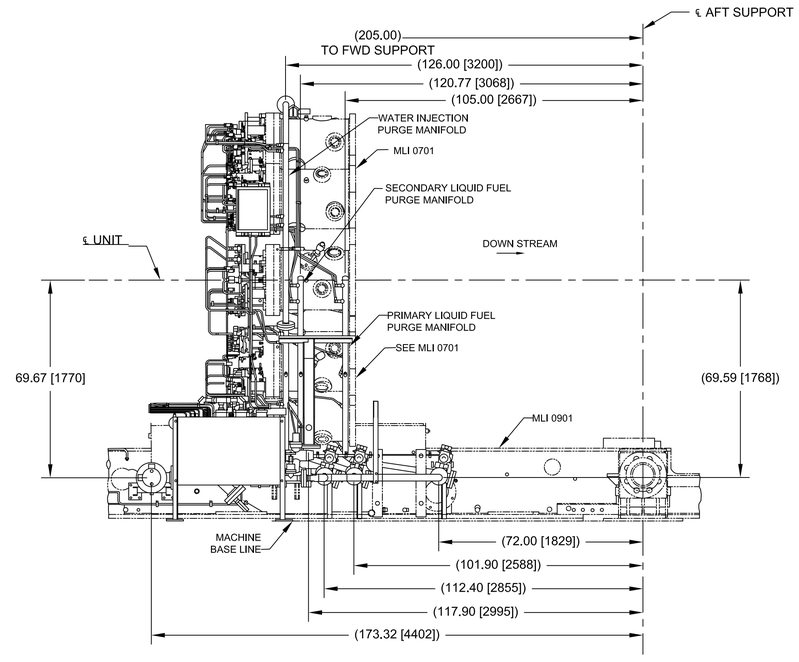

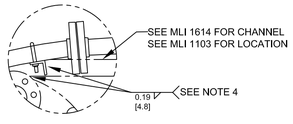

DETAIL: A-5

4					
3					
2					
1					
0	19/07/11	ISSUED FOR CONSTRUCTION	SAB	CB	TK
REV.	FECHA	REVISIONES O MODIFICACIONES	DIBUJO	REVISO	APROBO

REF. FABRICANTE		
REF. FABRICANTE	FABRICANTE	O/C:

AGM-02-0204-PLA-M-0031	ATOMIZING AIR LOWER PIPING ARRANGEMENT	(MLI 0983)	
AGM-02-0204-PLA-M-0029	ATOMIZING AIR INTERCONNECTION	(MLI 0969D)	
AGM-02-0204-PLA-M-0018	COOLING WATER – LUBE OIL	(MLI 0914)	
AGM-02-0204-PLA-I-0011	PRESSURE TRANSDUCER PANEL ASSY-PURGE PROT.	(MLI 05571)	
N° DE DOCUMENTO	DESCRIPCIÓN	REV.	FECHA

DOCUMENTOS DE REFERENCIA

DERWICK ASSOCIATES CORP. | ProEnergy SERVICES | CORPOELEC CORPORACIÓN ELÉCTRICA NACIONAL | La Electricidad de Caracas | GERENCIA FUNCIONAL DE INGENIERÍA Y PROYECTOS | SENECA

AMPLIACIÓN DE LA CAPACIDAD DE GENERACIÓN Y TRANSPORTE DE ELECTRICIDAD EN LA ISLA DE MARGARITA

FUEL NOZZLE PURGE
DUAL FUEL MOD. UNITS 298034 & 298035
(MLI 0918)

PLANO N°:	REV:		
PROYECTO N°: 409-2956-1			
CALCULO:	PROYECTO:	ESCALA: NONE	PLANO No:
REVISADO: C. Brown	CALCULO:	FECHA: 19/07/11	AGM-02-0204-PLA-M-0020
DIBUJO: S. Boerckel	REVISADO: J. Castillo	DISK. N°	
APROBADO: T. Koontz	DIBUJO:	ESC./PLOTEO:	
ARCHIVO:	APROBADO: M. Monticelli	ARCHIVO:	PAGINA: 1 DE: 7 REV. 0

F_A1_11 – 841x594mm

LINEA DE CORTE DE ORIGINAL
LINEA DE CORTE DE COPIA

N° PLANO: AGM-02-0204-PLA-M-0020 | 0

IMPORTANTE
ESTE PLANO FUE ELABORADO EN AUTOCAD V.2008
CUALQUIER MODIFICACION REALIZADA EN CAMPO DEBERA SER NOTIFICADO A LA UNIDAD RESPONSABLE.
QUEDA PROHIBIDO CORREGIR ESTE PLANO SIN AUTORIZACION DE ESTA UNIDAD.

ALL DIMENSIONS IN BRACKETS [ ] ARE MILLIMETER; EXPRESSED DIMENSIONS ARE INCHES

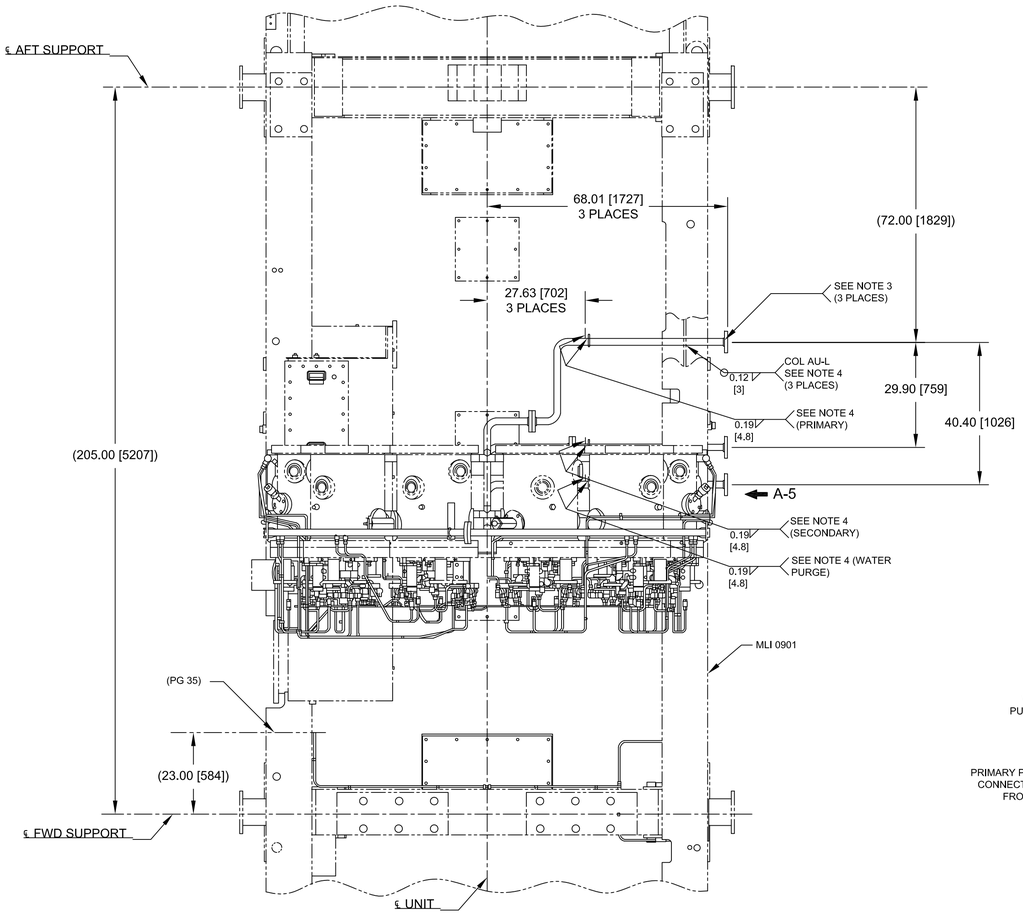

VIEW: B-6 (SH 1)

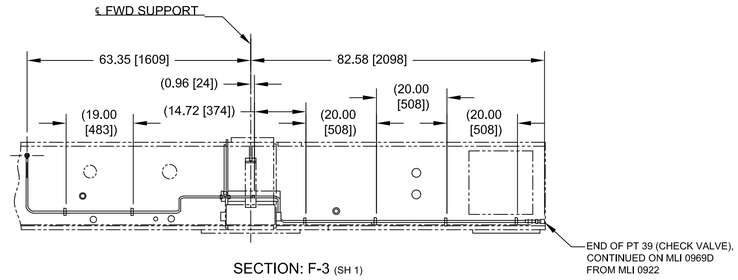

SECTION: F-3 (SH 1)

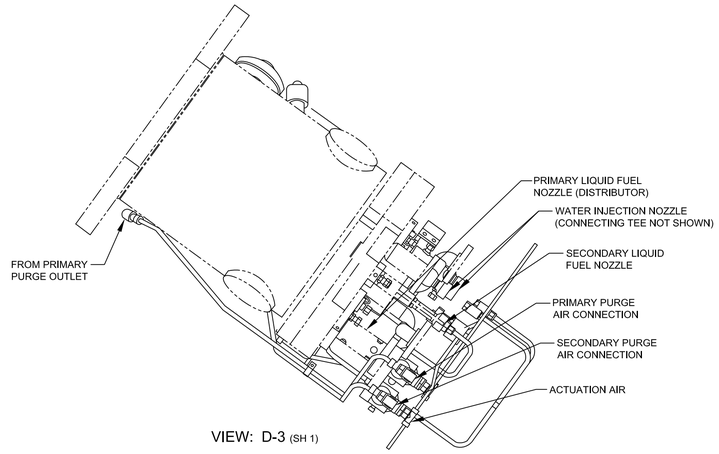

VIEW: D-3 (SH 1)

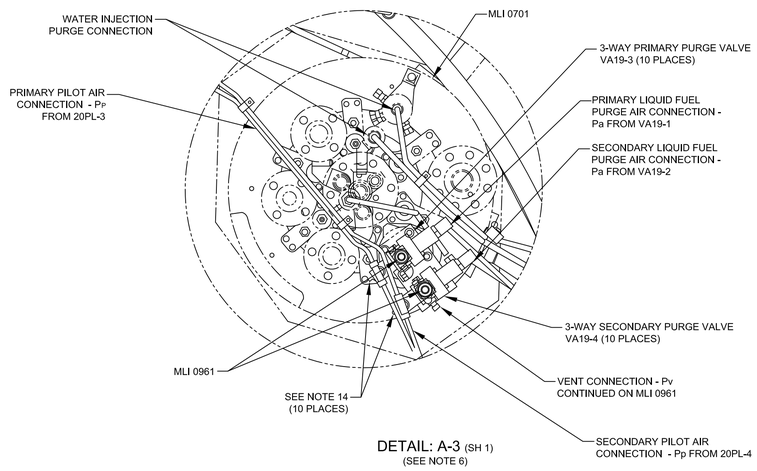

DETAIL: A-3 (SH 1)
(SEE NOTE 6)

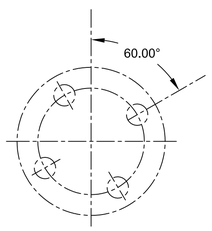

VIEW: A-5
(3 PLACES)

N° DE DOCUMENTO	DESCRIPCIÓN	REV.	FECHA
AGM-02-0204-PLA-M-0031	ATOMIZING AIR LOWER PIPING ARRANGEMENT (MLI 0983)		
AGM-02-0204-PLA-M-0029	ATOMIZING AIR INTERCONNECTION (MLI 0969D)		
AGM-02-0204-PLA-M-0018	COOLING WATER – LUBE OIL (MLI 0914)		
AGM-02-0204-PLA-I-0011	PRESSURE TRANSDUCER PANEL ASSY-PURGE PROT. (MLI 0557T)		

DOCUMENTOS DE REFERENCIA

REV.	FECHA	REVISIONES O MODIFICACIONES	DIBUJO	REVISO	APROBO
0	19/07/11	ISSUED FOR CONSTRUCTION	SAB	CB	TK

REF. FABRICANTE		
REF. FABRICANTE	FABRICANTE	O/C:

DERWICK Associates Corp. | ProEnergy SERVICES | CORPOELEC | La Electricidad de Caracas | GERENCIA FUNCIONAL DE INGENIERIA Y PROYECTOS | SENECA

AMPLIACIÓN DE LA CAPACIDAD DE GENERACIÓN Y TRANSPORTE DE ELECTRICIDAD EN LA ISLA DE MARGARITA
FUEL NOZZLE PURGE
DUAL FUEL MOD. UNITS 298034 & 298035
(MLI 0918)

PLANO N°:	REV:		
PROYECTO N°: 409-2956-1			
CALCULO:	PROYECTO:	ESCALA: NONE	PLANO No: AGM-02-0204-PLA-M-0020
REVISADO: C. Brown	CALCULO:	FECHA: 19/07/11	
DIBUJO: S. Boerckel	REVISADO: J. Castillo	DISK. N°	
APROBADO: T. Koontz	DIBUJO:	ESC./PLOTEO:	
ARCHIVO:	APROBADO: M. Monticelli	ARCHIVO:	PAGINA: 2 DE: 7 REV. 0

F_A1_11 – 841x594mm

LINEA DE CORTE DE COPIA
LINEA DE CORTE DE ORIGINAL

LINEA DE CORTE DE ORIGINAL
LINEA DE CORTE DE COPIA

N° PLANO: AGM-02-0204-PLA-M-0020 | 0

I M P O R T A N T E

ESTE PLANO FUE ELABORADO EN AUTOCAD V.2008
CUALQUIER MODIFICACION REALIZADA EN CAMPO DEBERA SER NOTIFICADO A LA UNIDAD RESPONSABLE.
QUEDA PROHIBIDO CORREGIR ESTE PLANO SIN AUTORIZACION DE ESTA UNIDAD.

ALL DIMENSIONS IN BRACKETS [ ] ARE MILLIMETER; EXPRESSED DIMENSIONS ARE INCHES

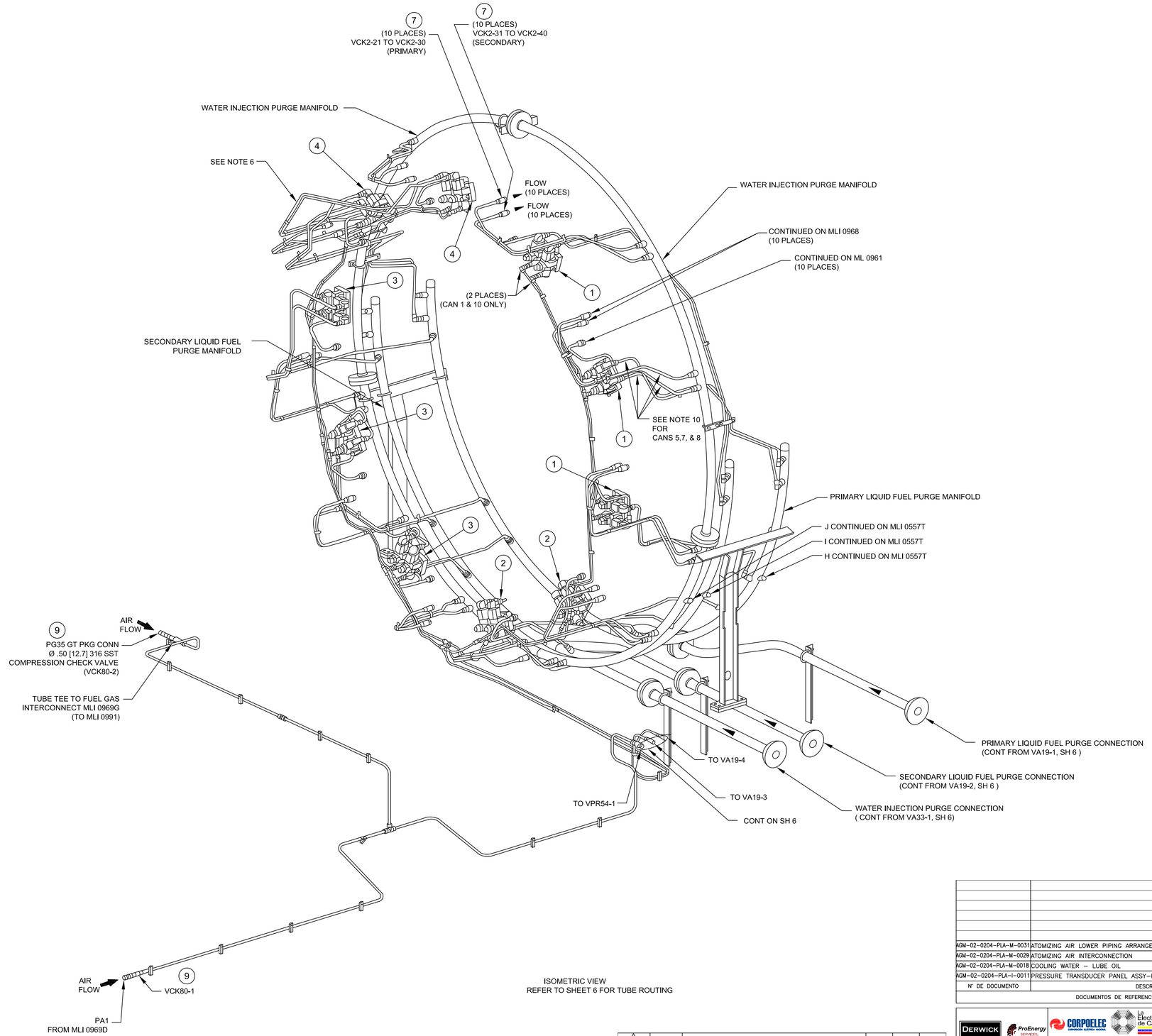

ISOMETRIC VIEW
REFER TO SHEET 6 FOR TUBE ROUTING

N° DE DOCUMENTO	DESCRIPCIÓN	REV.	FECHA
AGM-02-0204-PLA-M-0031	ATOMIZING AIR LOWER PIPING ARRANGEMENT (MLI 0983)		
AGM-02-0204-PLA-M-0029	ATOMIZING AIR INTERCONNECTION (MLI 0969D)		
AGM-02-0204-PLA-M-0018	COOLING WATER – LUBE OIL (MLI 0914)		
AGM-02-0204-PLA-I-0011	PRESSURE TRANSDUCER PANEL ASSY-PURGE PROT. (MLI 0557T)		

DOCUMENTOS DE REFERENCIA

REV.	FECHA	REVISIONES O MODIFICACIONES	DIBUJO	REVISO	APROBO
0	19/07/11	ISSUED FOR CONSTRUCTION	SAB	CB	TK

REF. FABRICANTE		
REF. FABRICANTE	FABRICANTE	O/C:

DERWICK ASSOCIATES CORP. | ProEnergy SERVICES | CORPOELEC CORPORACIÓN ELÉCTRICA NACIONAL | La Electricidad de Caracas | GERENCIA FUNCIONAL DE INGENIERÍA Y PROYECTOS | SENECA

AMPLIACIÓN DE LA CAPACIDAD DE GENERACIÓN Y TRANSPORTE DE ELECTRICIDAD EN LA ISLA DE MARGARITA

FUEL NOZZLE PURGE
DUAL FUEL MOD. UNITS 298034 & 298035
(MLI 0918)

PLANO N°:	REV:		
PROYECTO N°: 409-2956-1			
CALCULO:	PROYECTO:	ESCALA: NONE	PLANO No: AGM-02-0204-PLA-M-0020
REVISADO: C. Brown	CALCULO:	FECHA: 19/07/11	
DIBUJO: S. Boerckel	REVISADO: J. Castillo	DISK. N°	
APROBADO: T. Koontz	DIBUJO:	ESC./PLOTEO:	
ARCHIVO:	APROBADO: M. Monticelli	ARCHIVO:	PAGINA: 3 DE: 7 — REV. 0

F_A1_11 – 841x594mm

LINEA DE CORTE DE COPIA
LINEA DE CORTE DE ORIGINAL

LINEA DE CORTE DE ORIGINAL
LINEA DE CORTE DE COPIA

N° PLANO: AGM-02-0204-PLA-M-0020 | 0

I M P O R T A N T E

ESTE PLANO FUE ELABORADO EN AUTOCAD V.2008
CUALQUIER MODIFICACION REALIZADA EN CAMPO
DEBERA SER NOTIFICADO A LA UNIDAD
RESPONSABLE.
QUEDA PROHIBIDO CORREGIR ESTE PLANO SIN
AUTORIZACION DE ESTA UNIDAD.

ALL DIMENSIONS IN BRACKETS [ ] ARE MILLIMETER; EXPRESSED DIMENSIONS ARE INCHES

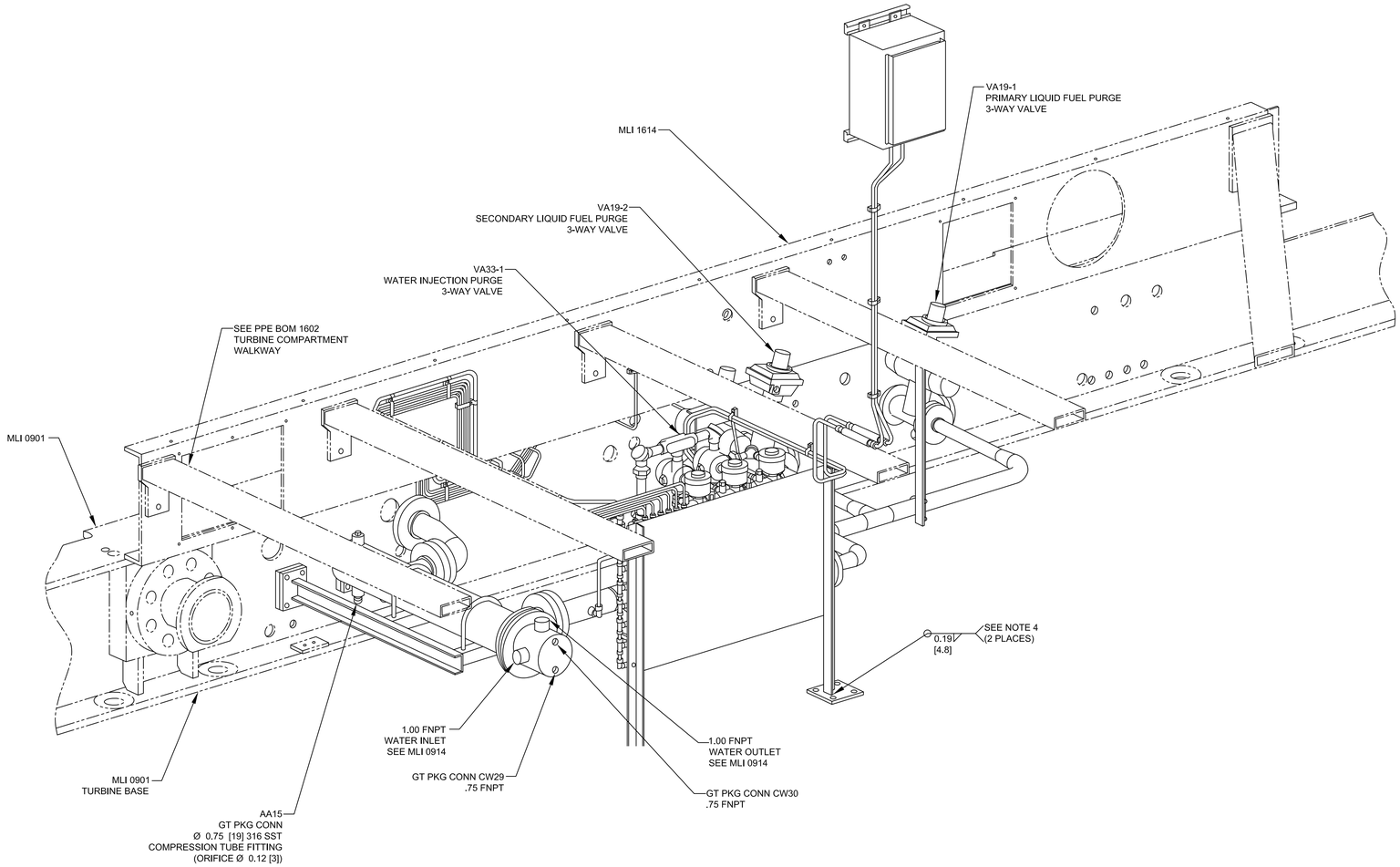

DETAIL: B-4 (SH 1)

ISOMETRIC VIEW

0	19/07/11	ISSUED FOR CONSTRUCTION	SAB	CB	TK
REV.	FECHA	REVISIONES O MODIFICACIONES	DIBUJO	REVISO	APROBO

REF. FABRICANTE		
REF. FABRICANTE	FABRICANTE	O/C:

N° DE DOCUMENTO	DESCRIPCIÓN	REV.	FECHA
AGM-02-0204-PLA-M-0031	ATOMIZING AIR LOWER PIPING ARRANGEMENT (MLI 0983)		
AGM-02-0204-PLA-M-0029	ATOMIZING AIR INTERCONNECTION (MLI 0969D)		
AGM-02-0204-PLA-M-0018	COOLING WATER – LUBE OIL (MLI 0914)		
AGM-02-0204-PLA-I-0011	PRESSURE TRANSDUCER PANEL ASSY-PURGE PROT. (MLI 0557T)		

DOCUMENTOS DE REFERENCIA

DERWICK ENERGY ASSOCIATES CORP. | ProEnergy SERVICES | CORPOELEC CORPORACIÓN ELÉCTRICA NACIONAL | La Electricidad de Caracas | GERENCIA FUNCIONAL DE INGENIERIA Y PROYECTOS | SENECA

AMPLIACIÓN DE LA CAPACIDAD DE GENERACIÓN Y TRANSPORTE DE ELECTRICIDAD EN LA ISLA DE MARGARITA

FUEL NOZZLE PURGE
DUAL FUEL MOD. UNITS 298034 & 298035
(MLI 0918)

PLANO N°:	REV:		
PROYECTO N°: 409-2956-1			
CALCULO:	PROYECTO:	ESCALA: NONE	PLANO No:
REVISADO: C. Brown	CALCULO:	FECHA: 19/07/11	AGM-02-0204-PLA-M-0020
DIBUJO: S. Boerckel	REVISADO: J. Castillo	DISK. N°	
APROBADO: T. Koontz	DIBUJO:	ESC./PLOTEO:	
ARCHIVO:	APROBADO: M. Monticelli	ARCHIVO:	PAGINA: 4 DE: 7 REV. 0

F_A1_11 – 841x594mm

LINEA DE CORTE DE COPIA
LINEA DE CORTE DE ORIGINAL

N° PLANO: AGM-02-0204-PLA-M-0020

IMPORTANTE
ESTE PLANO FUE ELABORADO EN AUTOCAD V.2008
CUALQUIER MODIFICACION REALIZADA EN CAMPO DEBERA SER NOTIFICADO A LA UNIDAD RESPONSABLE.
QUEDA PROHIBIDO CORREGIR ESTE PLANO SIN AUTORIZACION DE ESTA UNIDAD.

ALL DIMENSIONS IN BRACKETS [ ] ARE MILLIMETER, EXPRESSED DIMENSIONS ARE INCHES

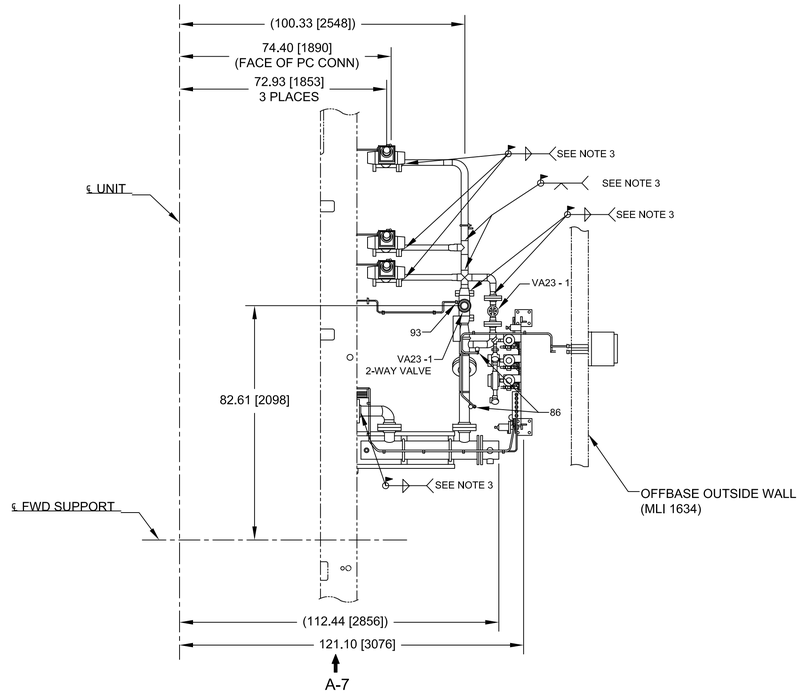

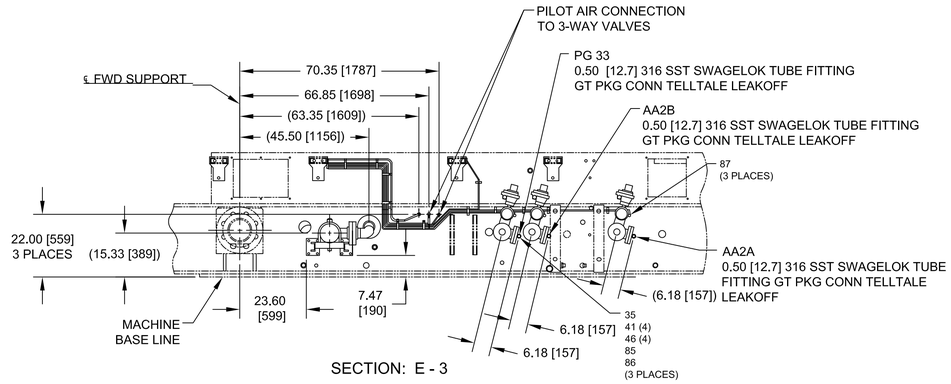

SECTION: E - 3

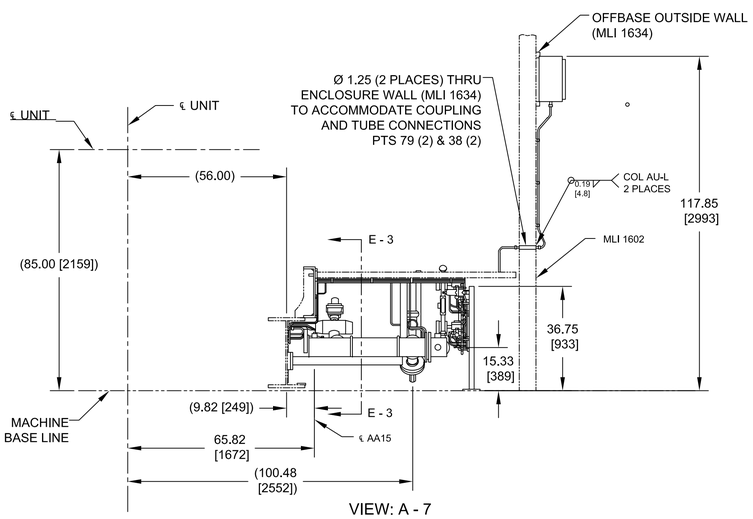

VIEW: A - 7

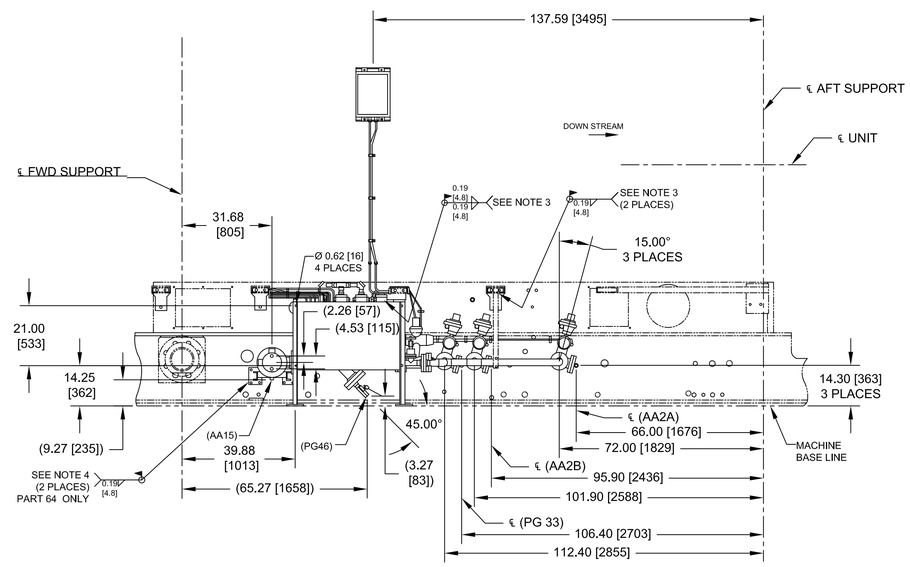

0	19/07/11	ISSUED FOR CONSTRUCTION	SAB	CB	TK
REV.	FECHA	REVISIONES O MODIFICACIONES	DIBUJO	REVISO	APROBO

REF. FABRICANTE		
REF. FABRICANTE	FABRICANTE	O/C:

N° DE DOCUMENTO	DESCRIPCIÓN	REV.	FECHA
AGM-02-0204-PLA-M-0031	ATOMIZING AIR LOWER PIPING ARRANGEMENT (MLI 0983)		
AGM-02-0204-PLA-M-0029	ATOMIZING AIR INTERCONNECTION (MLI 0969D)		
AGM-02-0204-PLA-M-0018	COOLING WATER – LUBE OIL (MLI 0914)		
AGM-02-0204-PLA-I-0011	PRESSURE TRANSDUCER PANEL ASSY-PURGE PROT. (MLI 0557T)		

DOCUMENTOS DE REFERENCIA

DERWICK / ProEnergy / CORPOELEC / La Electricidad de Caracas / SENECA

AMPLIACIÓN DE LA CAPACIDAD DE GENERACIÓN Y TRANSPORTE DE ELECTRICIDAD EN LA ISLA DE MARGARITA

FUEL NOZZLE PURGE
DUAL FUEL MOD. UNITS 298034 & 298035
(MLI 0918)

PLANO N°:	REV:		
PROYECTO N°: 409-2956-1			
CALCULO:	PROYECTO:	ESCALA: NONE	PLANO No:
REVISADO: C. Brown	CALCULO:	FECHA: 19/07/11	AGM-02-0204-PLA-M-0020
DIBUJO: S. Boerckel	REVISADO: J. Castillo	DISK. N°	
APROBADO: T. Koontz	DIBUJO:	ESC./PLOTEO:	
ARCHIVO:	APROBADO: M. Monticelli	ARCHIVO:	PAGINA: 5 DE: 7 REV. 0

F_A1_11 – 841x594mm

LINEA DE CORTE DE ORIGINAL
LINEA DE CORTE DE COPIA

N° PLANO: AGM-02-0204-PLA-M-0020 (0)

IMPORTANTE

ESTE PLANO FUE ELABORADO EN AUTOCAD V.2008 CUALQUIER MODIFICACION REALIZADA EN CAMPO DEBERA SER NOTIFICADO A LA UNIDAD RESPONSABLE.
QUEDA PROHIBIDO CORREGIR ESTE PLANO SIN AUTORIZACION DE ESTA UNIDAD.

ALL DIMENSIONS IN BRACKETS [ ] ARE MILLIMETER, EXPRESSED DIMENSIONS ARE INCHES

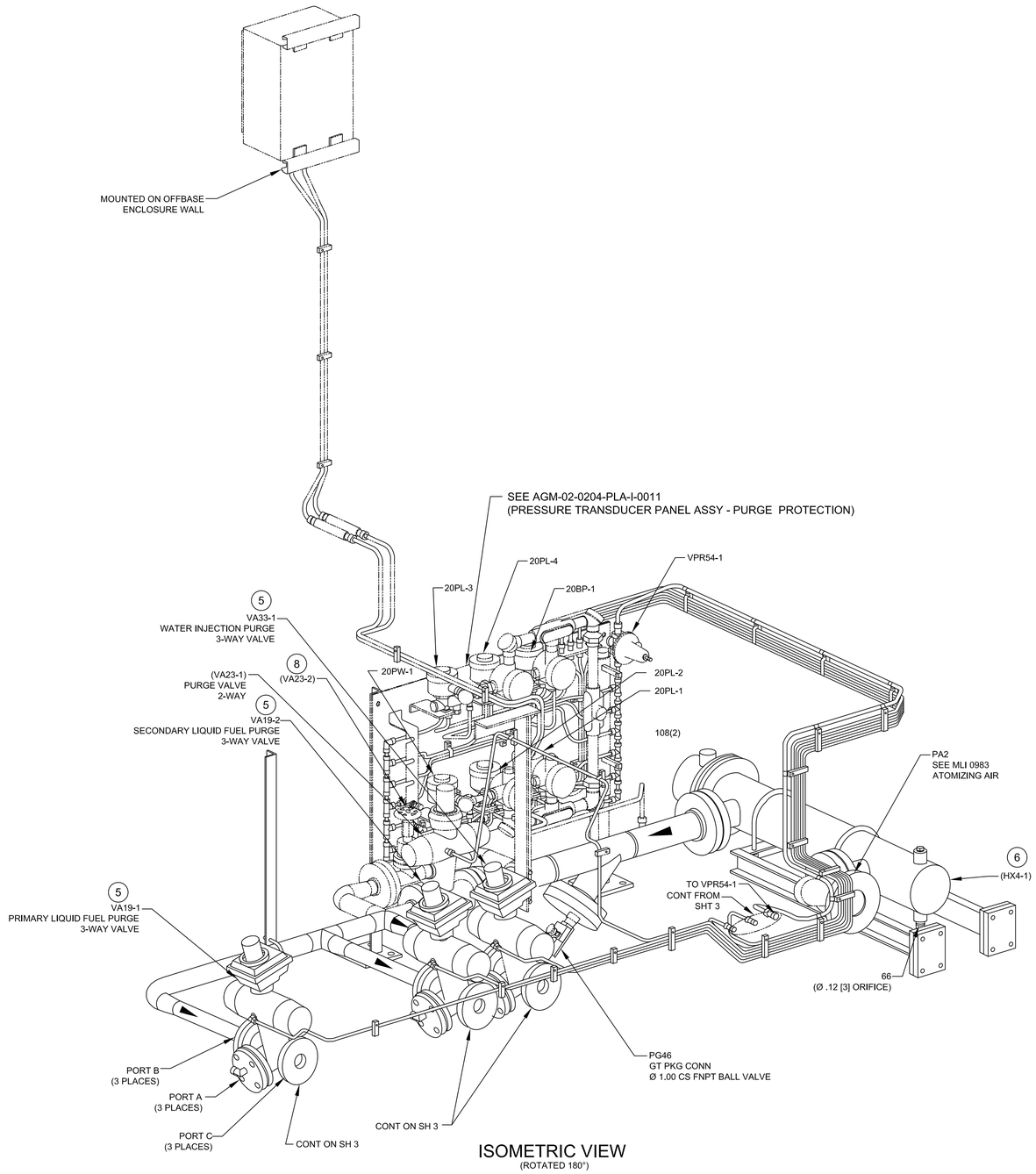

ISOMETRIC VIEW
(ROTATED 180°)

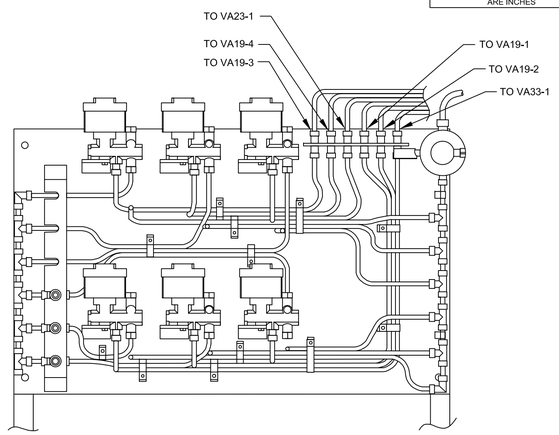

SECTION: E-3 (SH1)
SEE AGM-02-0204-PLA-I-0011
(PRESSURE TRANSDUCER PANEL ASSEMBLY - PURGE PROTECTION)

N° DE DOCUMENTO	DESCRIPCIÓN		REV.	FECHA
AGM-02-0204-PLA-M-0031	ATOMIZING AIR LOWER PIPING ARRANGEMENT	(MLI 0983)		
AGM-02-0204-PLA-M-0029	ATOMIZING AIR INTERCONNECTION	(MLI 0969D)		
AGM-02-0204-PLA-M-0018	COOLING WATER – LUBE OIL	(MLI 0914)		
AGM-02-0204-PLA-I-0011	PRESSURE TRANSDUCER PANEL ASSY–PURGE PROT.	(MLI 0557T)		

DOCUMENTOS DE REFERENCIA

REV.	FECHA	REVISIONES O MODIFICACIONES	DIBUJO	REVISO	APROBO
0	19/07/11	ISSUED FOR CONSTRUCTION	SAB	CB	TK

REF. FABRICANTE		
REF. FABRICANTE	FABRICANTE	O/C:

DERWICK Associate Associate Corp. — ProEnergy SERVICES — CORPOELEC — La Electricidad de Caracas — GERENCIA FUNCIONAL DE INGENIERÍA Y PROYECTOS — SENECA

AMPLIACIÓN DE LA CAPACIDAD DE GENERACIÓN Y TRANSPORTE DE ELECTRICIDAD EN LA ISLA DE MARGARITA

FUEL NOZZLE PURGE
DUAL FUEL MOD. UNITS 298034 & 298035
(MLI 0918)

PLANO N°:	REV:		
PROYECTO N°: 409-2956-1			
CALCULO:	PROYECTO:	ESCALA: NONE	PLANO No: AGM-02-0204-PLA-M-0020
REVISADO: C. Brown	CALCULO:	FECHA: 19/07/11	
DIBUJO: S. Boerckel	REVISADO: J. Castillo	DISK. N°	
APROBADO: T. Koontz	DIBUJO:	ESC./PLOTEO:	
ARCHIVO:	APROBADO: M. Monticelli	ARCHIVO:	PAGINA: 6 DE: 7 — REV. 0

F_A1_11 – 841x594mm

LINEA DE CORTE DE COPIA
LINEA DE CORTE DE ORIGINAL

LINEA DE CORTE DE ORIGINAL
LINEA DE CORTE DE COPIA

N° PLANO: AGM-02-0204-PLA-M-0020 | 0

IMPORTANTE

ESTE PLANO FUE ELABORADO EN AUTOCAD V.2008
CUALQUIER MODIFICACION REALIZADA EN CAMPO
DEBERA SER NOTIFICADO A LA UNIDAD
RESPONSABLE.
QUEDA PROHIBIDO CORREGIR ESTE PLANO SIN
AUTORIZACION DE ESTA UNIDAD.

ALL DIMENSIONS IN BRACKETS [ ] ARE MILLIMETER, EXPRESSED DIMENSIONS ARE INCHES

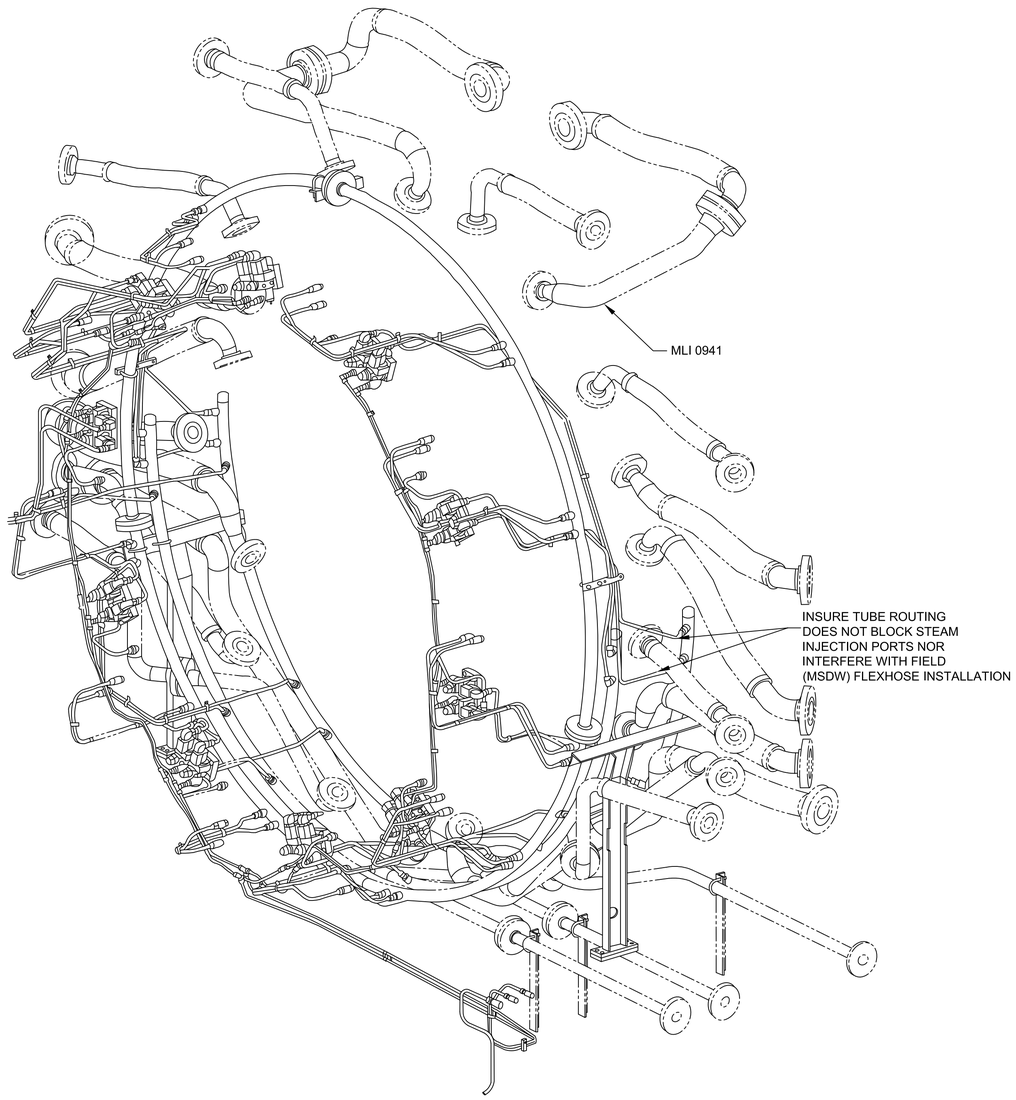

ISOMETRIC
VIEW REFERENCE VIEW FOR TUBE ROUTING

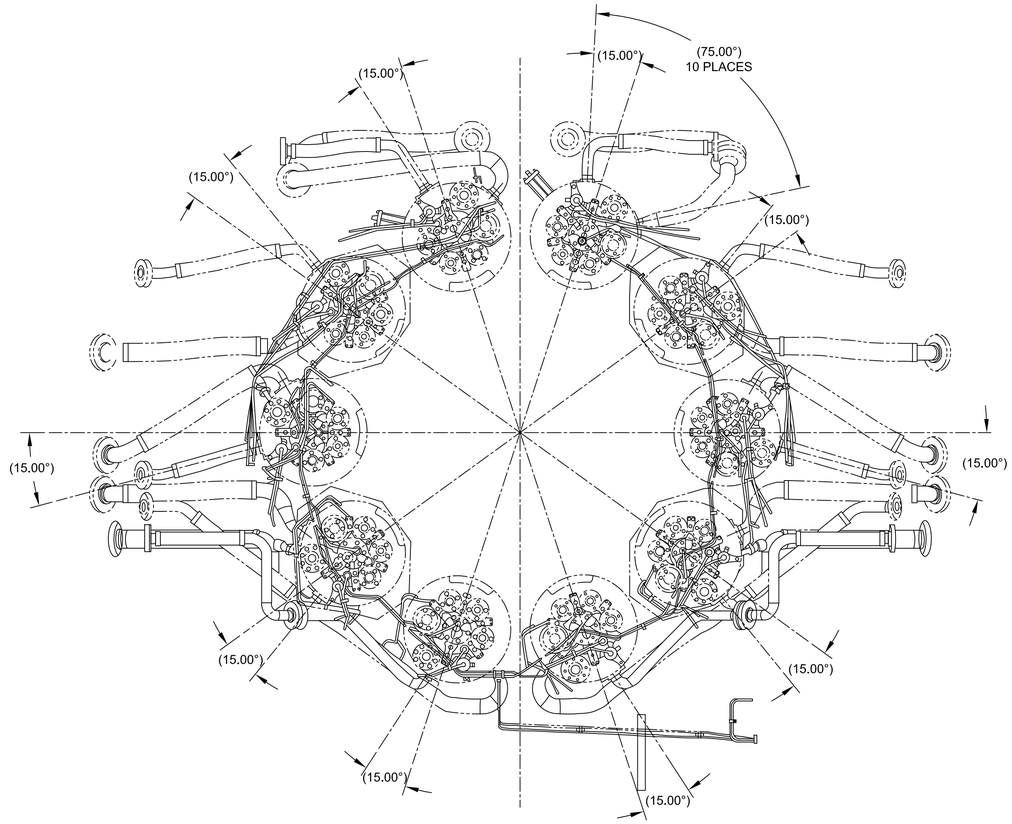

VIEW LOOKING DOWNSTREAM
REF. DIMENSIONS FOR
STEAM HOSE CONNECTIONS

N° DE DOCUMENTO	DESCRIPCIÓN	REV.	FECHA
AGM-02-0204-PLA-M-0031	ATOMIZING AIR LOWER PIPING ARRANGEMENT (MLI 0983)		
AGM-02-0204-PLA-M-0029	ATOMIZING AIR INTERCONNECTION (MLI 0969D)		
AGM-02-0204-PLA-M-0018	COOLING WATER – LUBE OIL (MLI 0914)		
AGM-02-0204-PLA-I-0011	PRESSURE TRANSDUCER PANEL ASSY-PURGE PROT. (MLI 0557T)		

DOCUMENTOS DE REFERENCIA

REV.	FECHA	REVISIONES O MODIFICACIONES	DIBUJO	REVISO	APROBO
0	19/07/11	ISSUED FOR CONSTRUCTION	SAB	CB	TK

REF. FABRICANTE		
REF. FABRICANTE	FABRICANTE	O/C:

DERWICK ASSOCIATES CORP. | ProEnergy SERVICES | CORPOELEC CORPORACIÓN ELÉCTRICA NACIONAL | La Electricidad de Caracas GERENCIA FUNCIONAL DE INGENIERÍA Y PROYECTOS | SENECA

AMPLIACIÓN DE LA CAPACIDAD DE GENERACIÓN Y TRANSPORTE DE ELECTRICIDAD EN LA ISLA DE MARGARITA

FUEL NOZZLE PURGE
DUAL FUEL MOD. UNITS 298034 & 298035
(MLI 0918)

PLANO N°:	REV:		
PROYECTO N°: 409-2956-1			
CALCULO:	PROYECTO:	ESCALA: NONE	PLANO No: AGM-02-0204-PLA-M-0020
REVISADO: C. Brown	CALCULO:	FECHA: 19/07/11	
DIBUJO: S. Boerckel	REVISADO: J. Castillo	DISK. N°	
APROBADO: T. Koontz	DIBUJO:	ESC./PLOTEO:	
ARCHIVO:	APROBADO: M. Monticelli	ARCHIVO:	PAGINA: 7 DE: 7 — REV. 0

F_A1_11 – 841x594mm

LINEA DE CORTE DE COPIA
LINEA DE CORTE DE ORIGINAL

N° PLANO: AGM-02-0204-PLA-M-0021 (0)

NOTES :

1. GENERAL MACHINING APPLIED PRACTICES ARE PER 348A9200.
2. PIPING APPLIED PRACTICES ARE PER 351A3700.
3. PIPING WELDS ARE PER P8A-AG3,FIGURE PER APPENDIX II, FILLER METAL COLUMN AB PER APPENDIX I. ASSEMBLY WELDS ARE DESIGNATED WITH A SYMBOL "X", IF APPLICABLE.
4. STRUCTURAL WELDS ARE PER P8A-AG1, FIGURE PER APPENDIX III, FILLER METAL COLUMN AB PER APPENDIX II.
5. INSTALL AND SUPPORT TUBING PER 215A4435.
6. INSTALL TUBE UNIONS AS REQUIRED.
7. TUBE RUNS ARE ILLUSTRATIVE ONLY.
8. CLEAN AND PAINT PER MLI 0108.
9. FLOW DIRECTION IS DESIGNATED WITH AN ARROW SYMBOL.
10. SLOPE .25 INCH PER FOOT MINIMUM.
11. DRAINS ARE NOT TO BE PIPED TOGETHER.
12. (0) DRAINS MUST BE "TELL TALE" DESIGN SO THAT FUEL AND WATER FLOW CAN BE VERIFIED. TELL TALE DRAINS & DRAIN SYSTEMS TO BE DESIGNED AND PROVIDED BY CUSTOMER
13. (0) THREE WAY VALVES TO BE PORTED TO THE LIQUID FUEL DRAIN FOR NORMAL OPERATION.
14. (0) SYSTEM PARAMETERS AND SPECIFICATIONS ARE BASED ON GE DRAWING 115E6619 & 237C5532 (PROVIDED BY CUSTOMER). INCLUDING REQUIREMENTS FOR DUAL FUEL SYSTEMS PER CUSTOMER SCOPE OF WORK.

ADDED PARTS LIST

ITEM	QTY	DESCRIPTION	MANUFACTURER	CATALOG No.
VA17-1 VA17-2 VA17-5	3	2-WAY ROTARY SHAFT TYPE DIRECT OPERATED CYLINDER ACTUATED - NORMALLY OPEN VALVE (1" FNPT)	R.G. LAURENCE VALVES	CYS516J42LCS
3WBV-1 3WBV-2 3WBV-5	3	3-WAY BALL VALVE (1" FNPT)	APOLLO	70-605-01 BRZ THRD

I M P O R T A N T E

ESTE PLANO FUE ELABORADO EN AUTOCAD V.2008 CUALQUIER MODIFICACION REALIZADA EN CAMPO DEBERA SER NOTIFICADO A LA UNIDAD RESPONSABLE.
QUEDA PROHIBIDO CORREGIR ESTE PLANO SIN AUTORIZACION DE ESTA UNIDAD.

ALL DIMENSIONS IN BRACKETS [ ] ARE MILLIMETER, EXPRESSED DIMENSIONS ARE INCHES

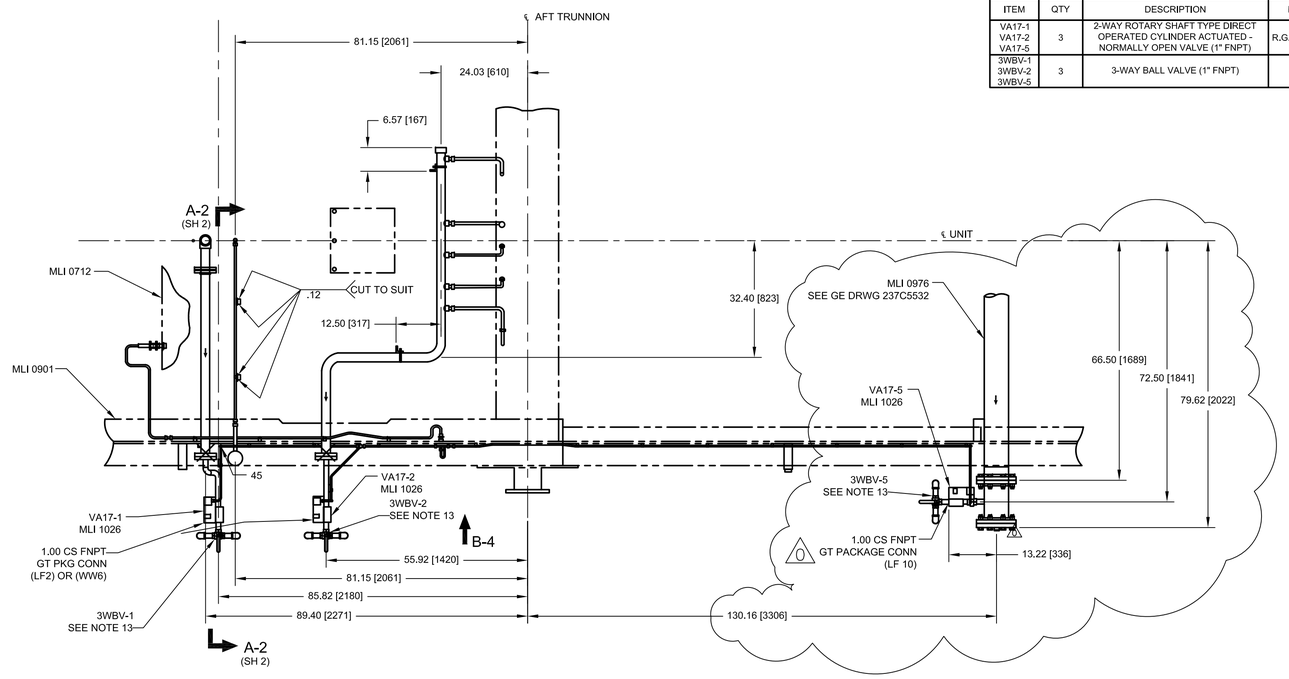

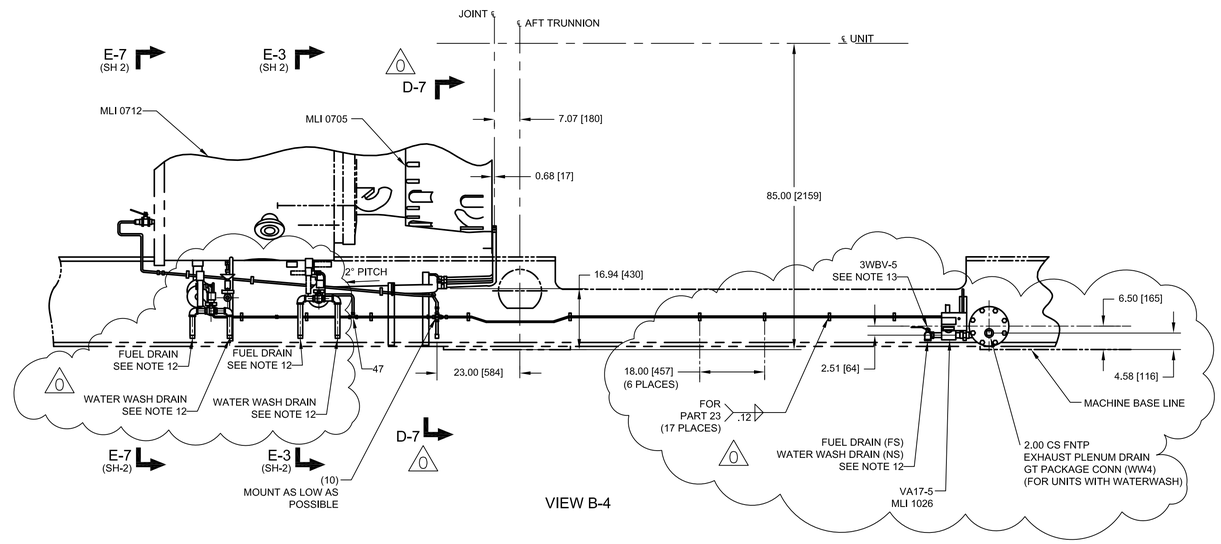

VIEW B-4

G3 UPPER BASE PIPING
G2 LOWER BASE PIPING
G1 MSDM SHEET

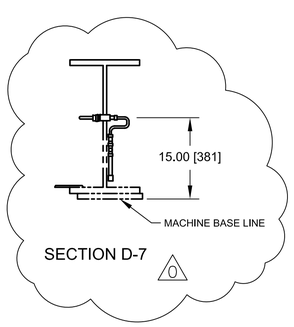

SECTION D-7 (0)

N° DE DOCUMENTO	DESCRIPCIÓN	REV.	FECHA
AGM-02-0204-ESP-G-0061	INTERCONECTION POINTS		
AGM-02-0204-PLA-I-0046	DEVICE SUMMARY		

DOCUMENTOS DE REFERENCIA

REV.	FECHA	REVISIONES O MODIFICACIONES	DIBUJO	REVISO	APROBO
0	11/03/11	ISSUED FOR FABRICATION, SEE NOTE 14	SAB	CB	TK

REF. FABRICANTE	FABRICANTE	O/C:
REF. FABRICANTE		

DERWICK Derwick Associates Group — ProEnergy SERVICES — CORPOELEC — La Electricidad de Caracas — GERENCIA FUNCIONAL DE INGENIERÍA Y PROYECTOS — SENECA

AMPLIACIÓN DE LA CAPACIDAD DE GENERACIÓN Y TRANSPORTE DE ELECTRICIDAD EN LA ISLA DE MARGARITA

FALSE START DRAIN PIPING ARRANGEMENT
DUAL FUEL MOD. UNITS 298034 & 298035
(MLI 0920)

PLANO N°:	REV:		
PROYECTO N°: 409-2956-1			
CALCULO:	PROYECTO:	ESCALA: 1:20	PLANO No: AGM-02-0204-PLA-M-0021
REVISADO: C. Brown	CALCULO:	FECHA: 11/03/11	
DIBUJO: S. Boerckel	REVISADO: J. Castillo	DISK. N°	
APROBADO: T. Koontz	DIBUJO:	ESC./PLOTEO:	
ARCHIVO:	APROBADO: M. Monticelli	ARCHIVO:	PAGINA: 1 DE: 2 — REV. 0

F_A1_11 – 841x594mm

LINEA DE CORTE DE ORIGINAL
LINEA DE CORTE DE COPIA

N° PLANO: AGM-02-0204-PLA-M-0021 (0)

IMPORTANTE

ESTE PLANO FUE ELABORADO EN AUTOCAD V.2008 CUALQUIER MODIFICACION REALIZADA EN CAMPO DEBERA SER NOTIFICADO A LA UNIDAD RESPONSABLE.
QUEDA PROHIBIDO CORREGIR ESTE PLANO SIN AUTORIZACION DE ESTA UNIDAD.

ALL DIMENSIONS IN BRACKETS [ ] ARE MILLIMETER; EXPRESSED DIMENSIONS ARE INCHES

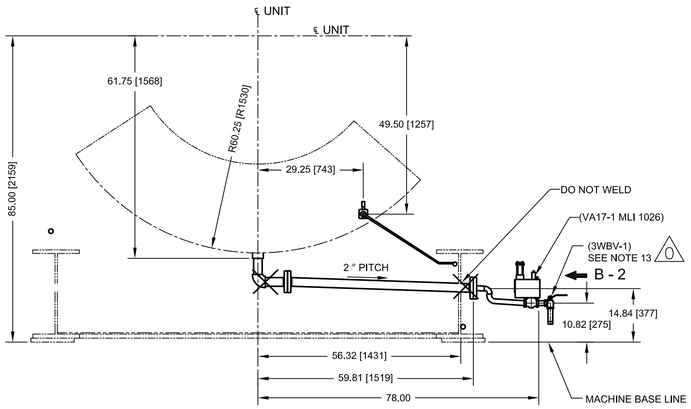

SECTION E-7 (SH 1)

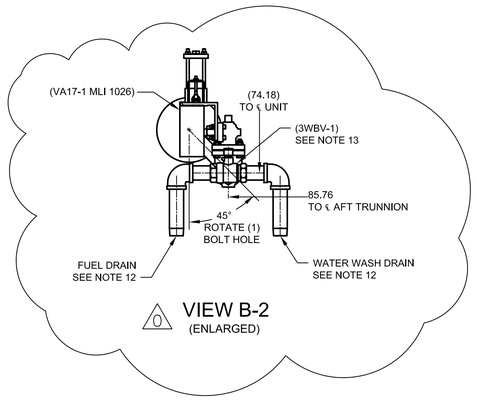

(0) VIEW B-2
(ENLARGED)

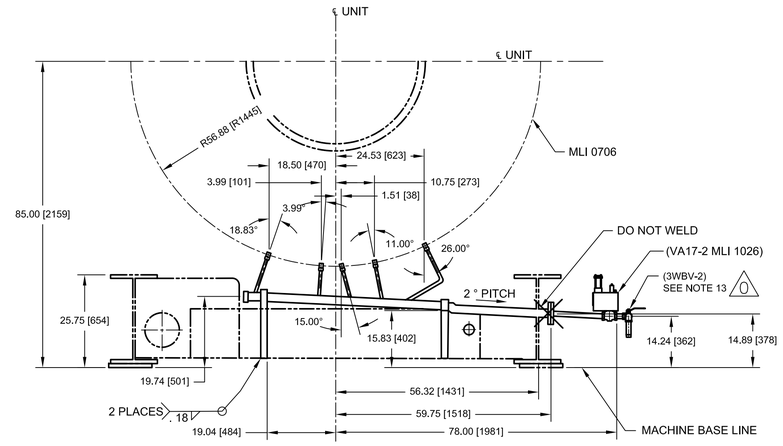

SECTION E-3 (SH 1)

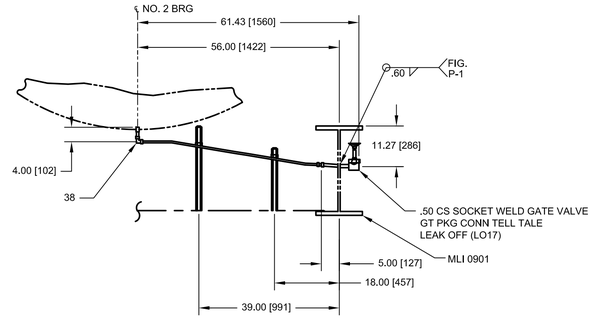

SECTION A-2 (SH 1)
(ROTATED 90 CCW)

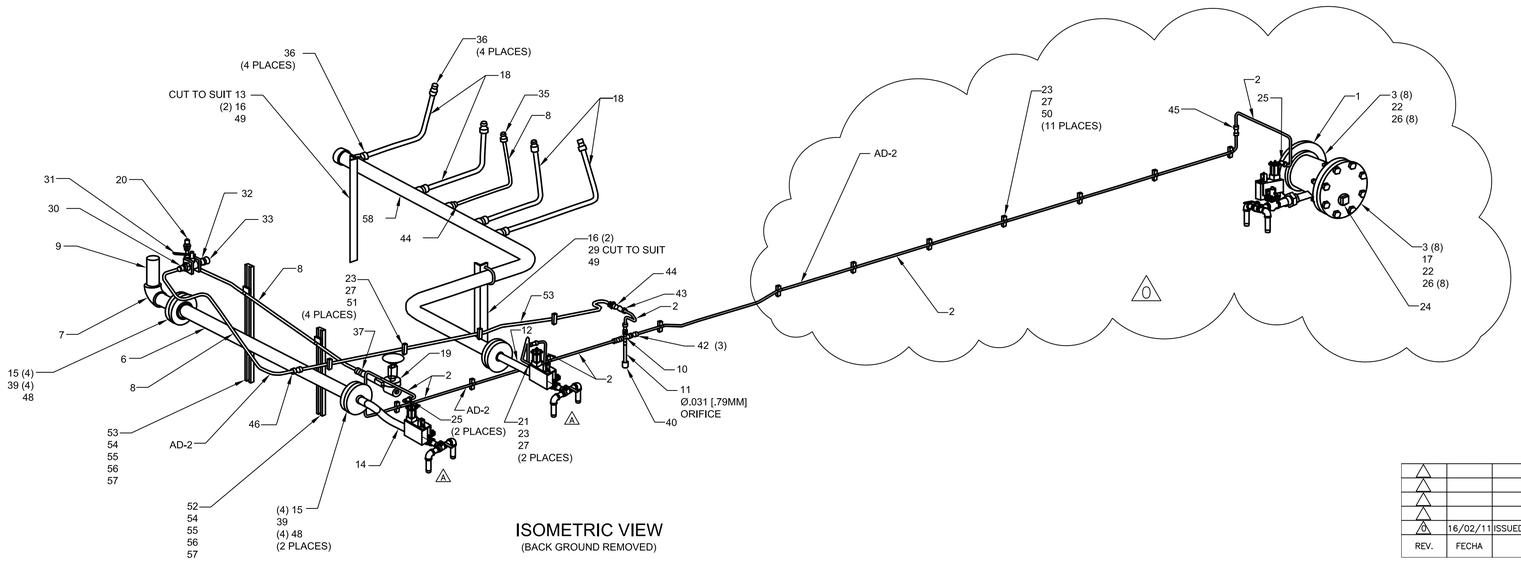

ISOMETRIC VIEW
(BACK GROUND REMOVED)

REV.	FECHA	REVISIONES O MODIFICACIONES	DIBUJO	REVISO	APROBO
0	16/02/11	ISSUED FOR FABRICATION, SEE NOTE 14 SHEET-1	SAB	CB	TK

REF. FABRICANTE		
REF. FABRICANTE	FABRICANTE	O/C:

N° DE DOCUMENTO	DESCRIPCIÓN	REV.	FECHA
AGM-02-0204-ESP-G-0061	INTERCONECTION POINTS		
AGM-02-0204-PLA-I-0046	DEVICE SUMMARY		

DOCUMENTOS DE REFERENCIA

DERWICK Bechtel Associates Corp. — ProEnergy SERVICES — CORPOELEC — La Electricidad de Caracas — SENECA

AMPLIACIÓN DE LA CAPACIDAD DE GENERACIÓN Y TRANSPORTE DE ELECTRICIDAD EN LA ISLA DE MARGARITA

PLANO N°: REV:

PROYECTO N°: 409-2956-1

FALSE START DRAIN PIPING ARRANGEMENT
DUAL FUEL MOD. UNITS 298034 & 298035
(MLI 0920)

CALCULO:	PROYECTO:	ESCALA: 1:20	PLANO No: AGM-02-0204-PLA-M-0021
REVISADO: C. Brown	CALCULO:	FECHA: 11/03/11	
DIBUJO: S. Boerckel	REVISADO: J. Castillo	DISK. N°	
APROBADO: T. Koontz	DIBUJO:	ESC./PLOTEO:	
ARCHIVO:	APROBADO: M. Monticelli	ARCHIVO:	PAGINA: 2 DE: 2 — REV. 0

F_A1_11 – 841x594mm

LINEA DE CORTE DE COPIA
LINEA DE CORTE DE ORIGINAL

LINEA DE CORTE DE ORIGINAL
LINEA DE CORTE DE COPIA

N° PLANO: AGM-02-0204-PLA-M-0022 | 0

NOTES :

1. GENERAL MACHINING APPLIED PRACTICES ARE PER 348A9200.
2. PIPING APPLIED PRACTICES ARE PER 351A3700.
3. PIPING WELDS ARE PER P8A - AG3, FILLER MATERIAL IS PER COLUMN AE - L UNLESS OTHERWISE SPECIFIED IN THIS DOCUMENT.
4. STRUCTURAL WELDS ARE PER P8A - AG1, FILLER MATERIAL IS PER COLUMN AB UNLESS OTHERWISE SPECIFIED.
5. BOLT AND STUD TORQUING TO BE PER 248A4158.
6. TUBE ASSEMBLY AND FITTING TO BE PER 215A4435.
7. FLANGE ASSEMBLIES AT BOTH COMPRESSORS ARE CRITICAL INTERFACES IN A STRAINED CONDITION.ASSEMBLER SHOULD TAKE PRECAUTIONS WHEN INSTALLING FLANGES.
8. LOCATION OF BOOSTER COMPRESSOR PEDESTAL IS DETERMINED BY PIPING CONNECTIONS. BASE IS TO BE WELDED DOWN AFTER ALIGNING TO PIPING.
9. FLANGE ON DISCHARGE SIDE OF BOOSTER COMPRESSOR SHOULD BE AN ASSEMBLY WELD.
10. WELDS TO BE MADE AFTER FINAL INSTALLATION OF OFF - BASE LAGGING ROOF (ML I 1634).
11. SYSTEM PARAMETERS AND SPECIFICATIONS ARE BASED ON TYPICAL REQUIRMENTS FOR 7EA DLN 1.0 DUAL FUEL SYSTEMS AND CUSTOMER SCOPE OF WORK.
12. THIS DRAWING IS A REPRESENTATION OF DUAL FUEL CONFIGURATION WHICH INCLUDES ORIGINAL, MODIFIED, AND NEW EQUIPMENT.

PARTS LIST

ITEM	QTY	DEVICE No	DESCRIPTION	VENDOR/MODEL
1	1	88-AB	AA BOOSTER COMPRESSOR MOTOR	TOSHIBA / 0402FTSA31A-P
2	1	CA2-1	AA BOOSTER COMPRESSOR	GARDNER DENVER / A5CDL
3	1	CA1-1	AA MAIN COMPRESSOR	ATLAS COPCO / SCF-6
4	2	N/A	WAFER CHECK VALVES	MUELLER STEAM SPECIALTY / 1603
5	1	FA5-1	AA FILTER	HILLIARD / 4960-00-013-C
6	1	VA22-1	BUTTERFLY/AIR ACTUATED	CONTROMATICS / PA/PAS M5
7	1	VA18-1	BUTTERFLY/AIR ACTUATED	CONTROMATICS / PA/PAS M5

I M P O R T A N T E

ESTE PLANO FUE ELABORADO EN AUTOCAD V.2008
CUALQUIER MODIFICACION REALIZADA EN CAMPO DEBERA SER NOTIFICADO A LA UNIDAD RESPONSABLE.
QUEDA PROHIBIDO CORREGIR ESTE PLANO SIN AUTORIZACION DE ESTA UNIDAD.

ALL DIMENSIONS IN BRACKETS [ ] ARE MILLIMETER, EXPRESSED DIMENSIONS ARE INCHES

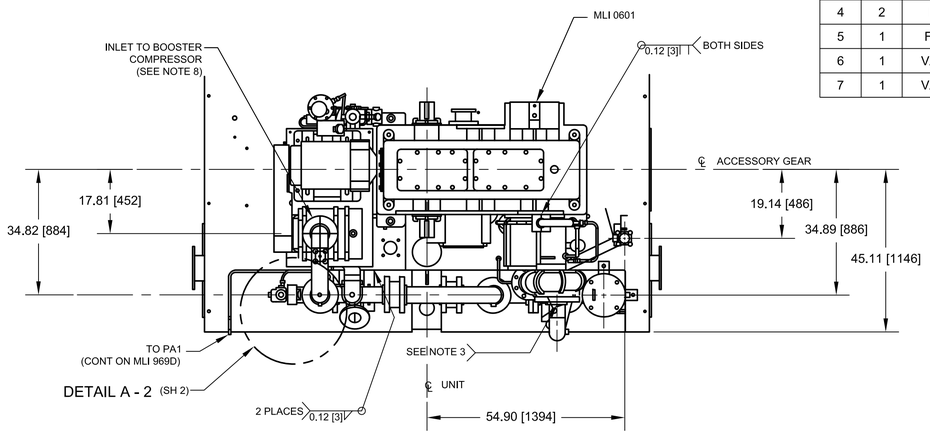

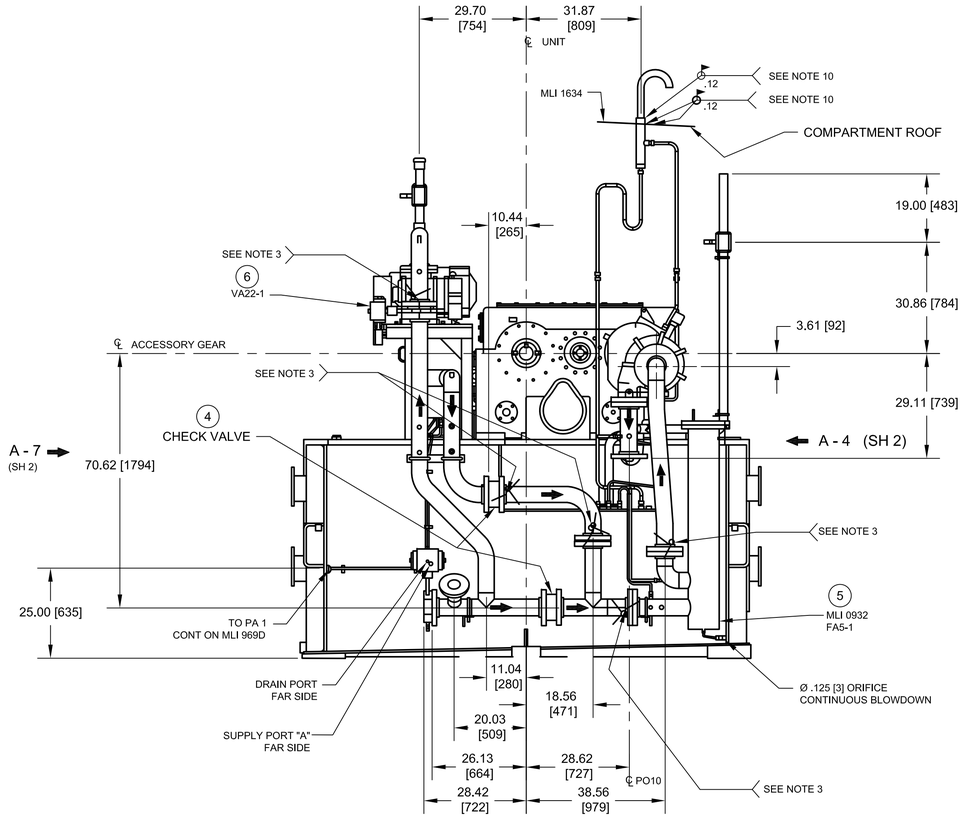

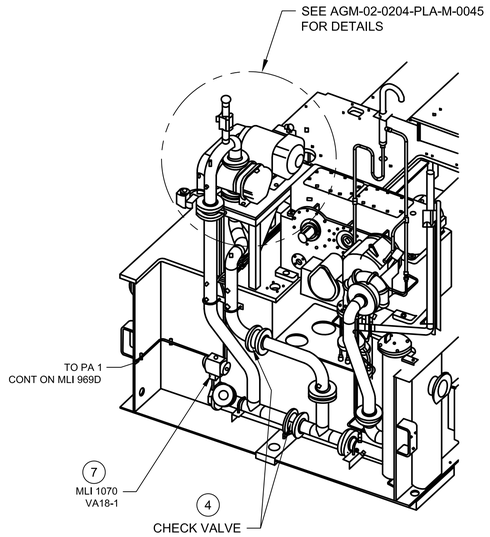

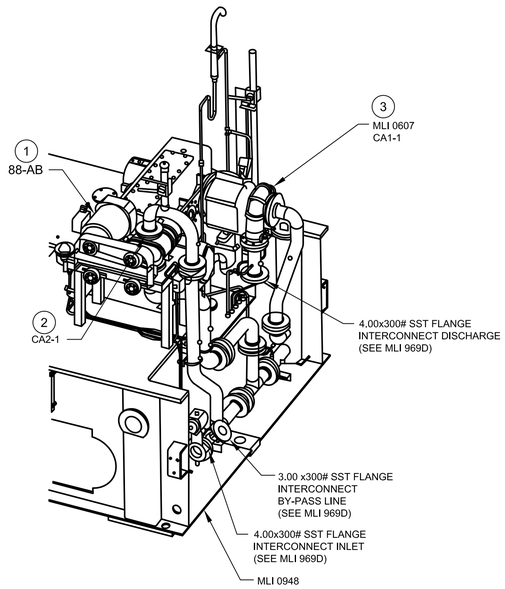

REV.	FECHA	REVISIONES O MODIFICACIONES	DIBUJO	REVISO	APROBO
0	14/07/11	ISSUED FOR CONSTRUCTION	SAB	CB	TK

REF. FABRICANTE		
REF. FABRICANTE	FABRICANTE	O/C:

N° DE DOCUMENTO	DESCRIPCIÓN	REV.	FECHA
AGM-02-0204-PLA-M-0045	40HP ATOMIZING AIR BOOSTER PUMP STAND ASSEMBLY		
AGM-02-0204-PLA-M-0029	ATOMIZING AIR INTERCONNECT		
AGM-02-0204-PLA-I-0046	DEVICE SUMMARY		

DOCUMENTOS DE REFERENCIA

DERWICK Sonecco Associates Corp. | ProEnergy SERVICES | CORPOELEC | La Electricidad de Caracas | GERENCIA FUNCIONAL DE INGENIERIA Y PROYECTOS | SENECA

AMPLIACIÓN DE LA CAPACIDAD DE GENERACIÓN Y TRANSPORTE DE ELECTRICIDAD EN LA ISLA DE MARGARITA

ATOMIZING AIR PIPING ARRANGEMENT – ACCESSORY DUAL FUEL MOD. UNITS 298034 & 298035 (MLI 0922)

PLANO N°:	REV:		
PROYECTO N°: 409-2956-1			
CALCULO:	PROYECTO:	ESCALA: 1:20	PLANO No: AGM-02-0204-PLA-M-0022
REVISADO: C. Brown	CALCULO:	FECHA: 14/07/11	
DIBUJO: S. Boerckel	REVISADO: J. Castillo	DISK. N°	
APROBADO: T. Koontz	DIBUJO:	ESC./PLOTEO:	
ARCHIVO:	APROBADO: M. Monticelli	ARCHIVO:	PAGINA: 1 DE: 2 — REV. 0

F_A1_11 – 841x594mm

LINEA DE CORTE DE COPIA
LINEA DE CORTE DE ORIGINAL

LINEA DE CORTE DE ORIGINAL
LINEA DE CORTE DE COPIA

N° PLANO: AGM-02-0204-PLA-M-0022 | 0

IMPORTANTE

ESTE PLANO FUE ELABORADO EN AUTOCAD V.2008
CUALQUIER MODIFICACION REALIZADA EN CAMPO DEBERA SER NOTIFICADO A LA UNIDAD RESPONSABLE.
QUEDA PROHIBIDO CORREGIR ESTE PLANO SIN AUTORIZACION DE ESTA UNIDAD.

ALL DIMENSIONS IN BRACKETS [ ] ARE MILLIMETER; EXPRESSED DIMENSIONS ARE INCHES

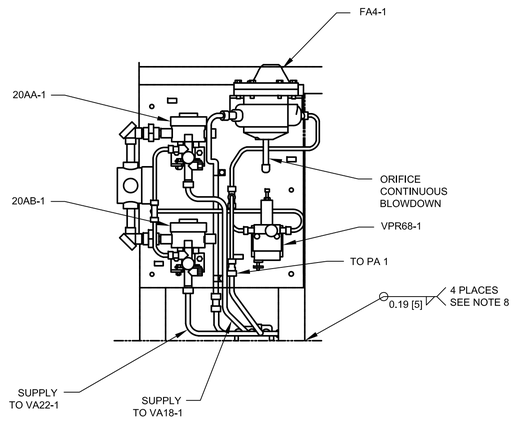

VIEW E-7
(ENLARGED)
(ALL OTHER EQUIPMENT REMOVED)

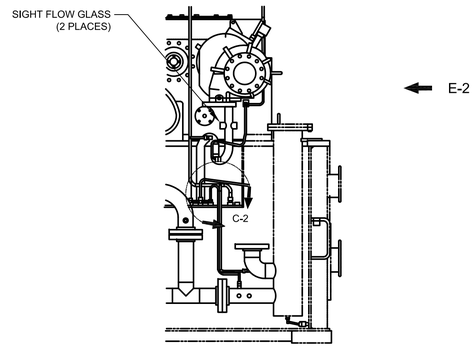

VIEW E-4

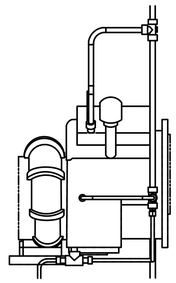

VIEW E-2

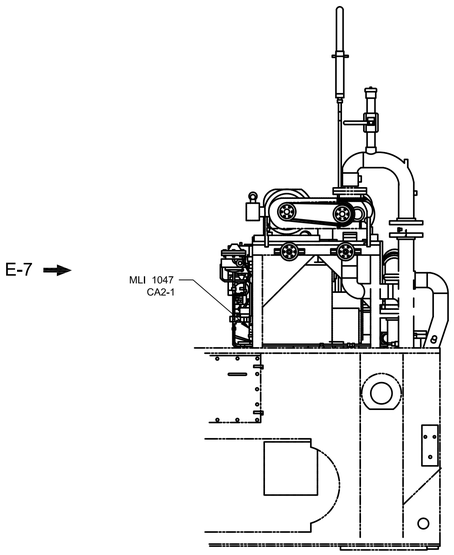

VIEW A-7 (SH 1)
(LAGGING REMOVED)

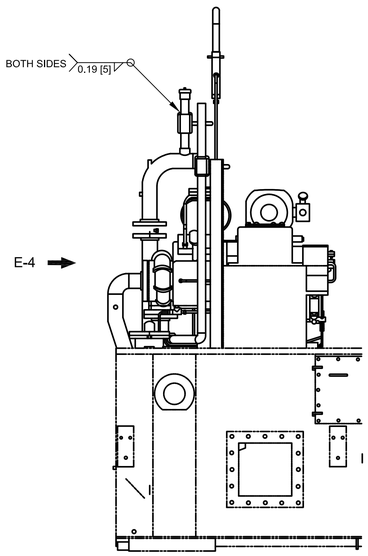

VIEW A-4 (SH 1)

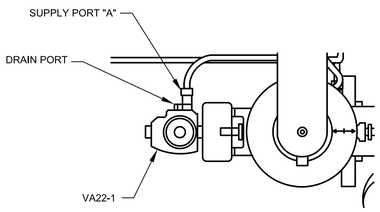

DETAIL A - 2 (SH 1)

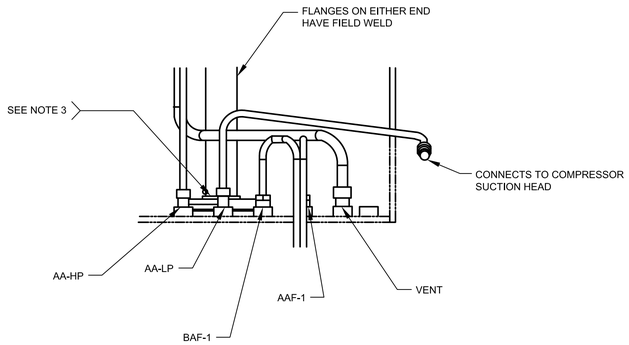

DETAIL C-2

0	14/07/11	ISSUED FOR CONSTRUCTION	SAB	CB	TK
REV.	FECHA	REVISIONES O MODIFICACIONES	DIBUJO	REVISO	APROBO

REF. FABRICANTE		
REF. FABRICANTE	FABRICANTE	O/C:

N° DE DOCUMENTO	DESCRIPCIÓN	REV.	FECHA
AGM-02-0204-PLA-M-0045	40HP ATOMIZING AIR BOOSTER PUMP STAND ASSEMBLY		
AGM-02-0204-PLA-M-0029	ATOMIZING AIR INTERCONNECT		
AGM-02-0204-PLA-I-0046	DEVICE SUMMARY		

DOCUMENTOS DE REFERENCIA

DERWICK Associates Corp. | ProEnergy SERVICES | CORPOELEC | La Electricidad de Caracas | GERENCIA FUNCIONAL DE INGENIERIA Y PROYECTOS | SENECA

AMPLIACIÓN DE LA CAPACIDAD DE GENERACIÓN Y TRANSPORTE DE ELECTRICIDAD EN LA ISLA DE MARGARITA

ATOMIZING AIR PIPING ARRANGEMENT – ACCESSORY DUAL FUEL MOD. UNITS 298034 & 298035 (MLI 0922)

PLANO N°:	REV:		
PROYECTO N°: 409-2956-1			
CALCULO:	PROYECTO:	ESCALA: NONE	PLANO No:
REVISADO: C. Brown	CALCULO:	FECHA: 14/07/11	AGM-02-0204-PLA-M-0022
DIBUJO: S. Boerckel	REVISADO: J. Castillo	DISK. N°	
APROBADO: T. Koontz	DIBUJO:	ESC./PLOTEO:	
ARCHIVO:	APROBADO: M. Monticelli	ARCHIVO:	PAGINA: 2 DE: 2 — REV. 0

F_A1_11 – 841x594mm

LINEA DE CORTE DE COPIA
LINEA DE CORTE DE ORIGINAL

N° PLANO: AGM-02-0204-PLA-M-0024 | 0

NOTES:

1. GENERAL MACHINING APPLIED PRACTICES ARE PER 348A9200.
2. PIPING APPLIED PRACTICES ARE PER 351A 3700.
3. INSTALL AND SUPPORT TUBING PER 215A4435.
4. PIPING WELDS PER ARE P8A-AG1, FIG. PER SPEC. APPENDIX III, FILLER METAL PER COL. AB, UNLESS OTHERWISE SPECIFIED.
5. TORQUE BOLTS ARE PER 248A4158.
6. GENERAL CONDUIT APPLIED PRACTICES ARE PER 287A1300. CONDUIT APPLIED PRACTICES ARE PER ON SHEET 5.
7. ALL TUBING IS 0.25 [5] OD, EXCEPT FOR DRAIN LINES (AFTER DRAIN VALVES) WHICH ARE 0.375 [10] OD AS SHOWN.
8. INSURE THAT PRESSURE GAUGES ARE MOUNTED SO THAT GAUGE IS CENTERED IN PANEL HOLE, AND THAT BODY OF GAUGE DOES NOT TOUCH EDGE OF CUT-OUT.
9. REFER MLI 0974 FOR LOCATION OF CABINET ON BASE.
10. REFERENCE TOOL FIXTURE FOR TUBING LAYOUT AT BOTTOM OF CABINET.
11. SYSTEM PARAMETERS AND SPECIFICATIONS ARE BASED ON GE DRAWING 117E4299 (PROVIDED BY CUSTOMER). INCLUDING REQUIRMENTS FOR DUAL FUEL SYSTEMS PER CUSTOMER SCOPE OF WORK.

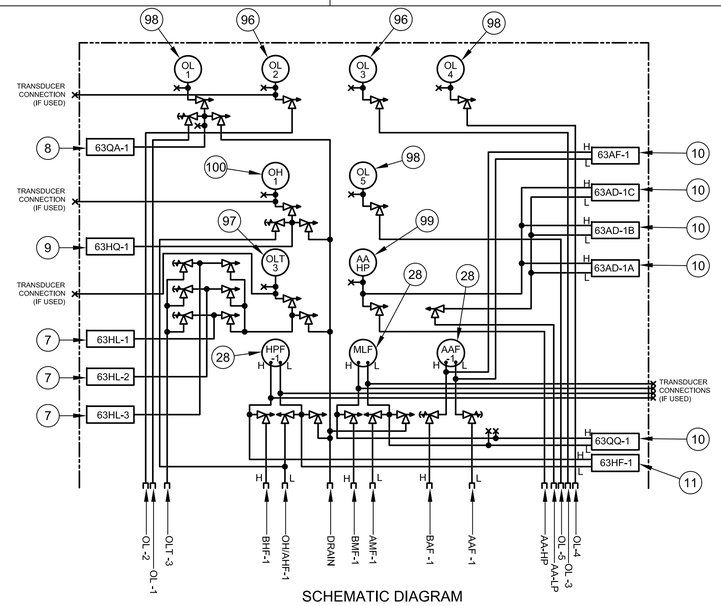

SCHEMATIC DIAGRAM

PARTS LIST				
ITEM	QTY	DEVICE No	DESCRIPTION	VENDOR/MODEL
1	400FT [129120]		1/4"OD x .049 TUBING – SS	SWAGELOK / SS–T4–S–049–20
2	10FT [3048]		3/8"OD x .049 TUBING – SS	SWAGELOK / SS–T6–S–049–20
4	7		1/4"NPT NEEDLE VALVE – ANGLED	SWAGELOK / SS–1VF4–A
5	21		1/4"SWAGE NEEDLE VALVE – ANGLED	SWAGELOK / SS–1VS4–A
7	3	63HL–1 63HL–2 63HL–3	PRESSURE SWITCH (4–75 PSI)	SOR / 4B3–P45–M4–C1A–TTWVX2
8	1	63QA–1	PRESSURE SWITCH (20–180 PSI)	SOR / 6B3–P5–M4–C1A–TTWVX2
9	1	63HQ–1	PRESSURE SWITCH (200–1750 PSI)	SOR / 9B3–P45–M4–C1X–TTWVX2
10	5	63AF–1 63AD–1A 63AD–1B 63AD–1C 63QQ–1	DIFFERNTIAL PRESSURE SWITCH (3–30 PSID)	SOR / 101B3–P3–M4–C1A–TTWVX3
11	1	63HF–1	DIFFERENTIAL PRESSURE SWITCH (10–75 PSID)	SOR / 101B3–P45–M4–C1X–TTWVX2
28	1	AAF–1 HPF–1 MLF	DIFERENTIAL PRESSURE GAUGE (0–10 PSID) DIFERENTIAL PRESSURE GAUGE (0–100 PSID) DIFERENTIAL PRESSURE GAUGE (0–25 PSID)	ASHCROFT / 45–1130SD–25B–10psid ASHCROFT / 45–1130SD–25B–100psid ASHCROFT / 45–1130SD–25B–25psid
96	2	OL–2 OL–3	PANEL MOUNT PRESSURE GAUGE (0–60 PSI)	DWYER / 7112–G060
97	1	OLT–3	PANEL MOUNT PRESSURE GAUGE (0–160 PSI)	DWYER / 7112–G160
98	3	OL–1 OL–4 OL–5	PANEL MOUNT PRESSURE GAUGE (0–200 PSI)	DWYER / 7112–G200
99	1	AA–HP	PANEL MOUNT PRESSURE GAUGE (0–400 PSI)	DWYER / 7112–G400
100	1	OH–1	PANEL MOUNT PRESSURE GAUGE (0–2000 PSI)	DWYER / 7112–GC020

I M P O R T A N T E

ESTE PLANO FUE ELABORADO EN AUTOCAD V.2008
CUALQUIER MODIFICACION REALIZADA EN CAMPO DEBERA SER NOTIFICADO A LA UNIDAD RESPONSABLE.
QUEDA PROHIBIDO CORREGIR ESTE PLANO SIN AUTORIZACION DE ESTA UNIDAD.

ALL DIMENSIONS IN BRACKETS [ ] ARE MILLIMETER; EXPRESSED DIMENSIONS ARE INCHES

ALL PRESSURES IN BRACKETS < > ARE kgf/cm²; EXPRESSED PRESSURES ARE PSI

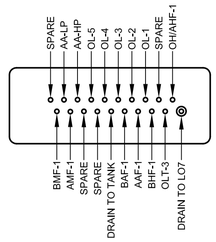

SECTION: A-A
BASE COUPLING ARRANGEMENT

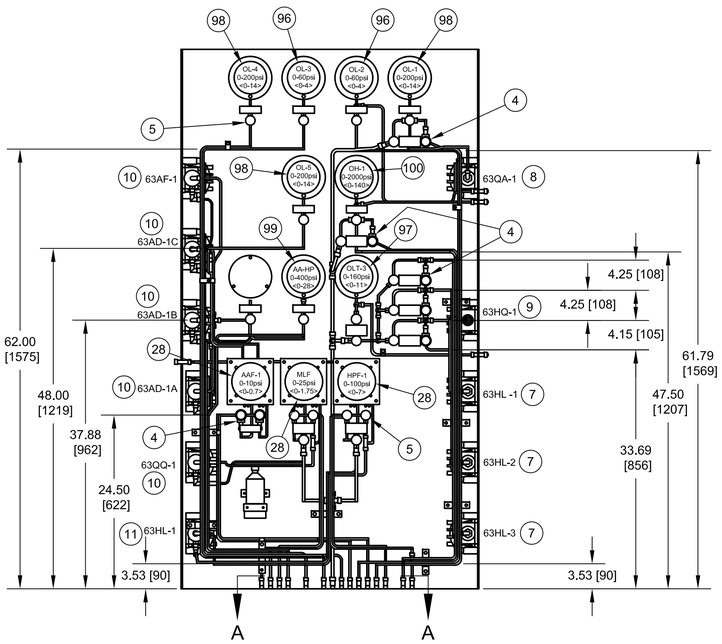

LOOKING AT FRONT OF CABINET
(PANEL (PART 3) SHOWN TRANSPARENT FOR CLARITY)

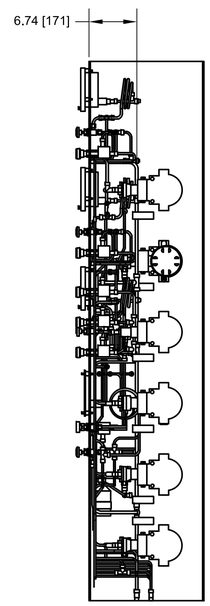

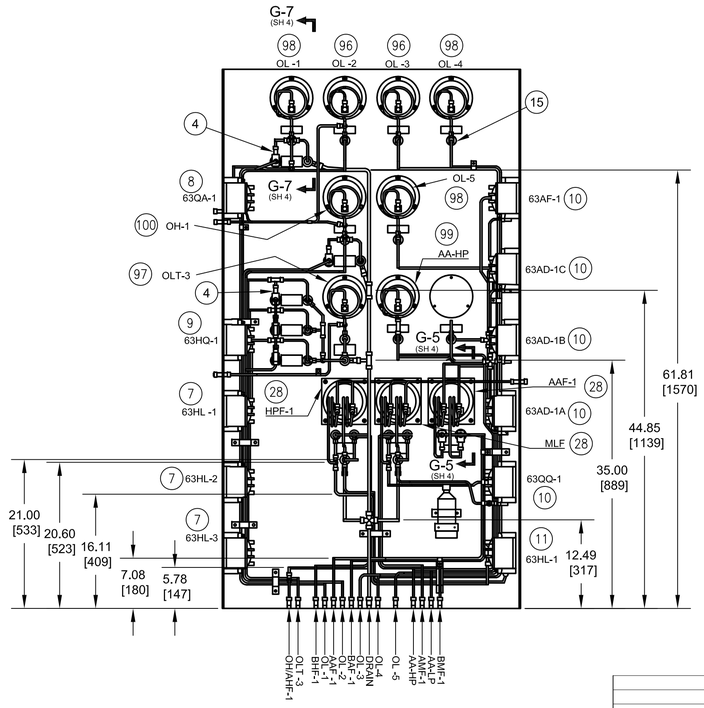

LOOKING AT REAR OF CABINET
(PANEL (PART 3) SHOWN TRANSPARENT FOR CLARITY)

REV.	FECHA	REVISIONES O MODIFICACIONES	DIBUJO	REVISO	APROBO
0	03/08/11	ISSUED FOR CONSTRUCTION	SAB	CB	TK

REF. FABRICANTE		
REF. FABRICANTE	FABRICANTE	O/C:

N° DE DOCUMENTO	DESCRIPCIÓN	REV.	FECHA
AGM–02–0204–PLA–I–0046	DEVICE SUMMARY		

DOCUMENTOS DE REFERENCIA

DERWICK ASSOCIATES CORP. | ProEnergy REPUESTOS | CORPOELEC | La Electricidad de Caracas | GERENCIA FUNCIONAL DE INGENIERÍA Y PROYECTOS | SENECA

AMPLIACIÓN DE LA CAPACIDAD DE GENERACIÓN Y TRANSPORTE DE ELECTRICIDAD EN LA ISLA DE MARGARITA

GAUGE CABINET ASSEMBLY – ACCESSORY
DUAL FUEL MOD. UNITS 298034 & 298035
(MLI 0926)

PLANO N°: | REV:
PROYECTO N°: 409–2956–1

CALCULO:	PROYECTO:	ESCALA: NONE	PLANO No:
REVISADO: C. Brown	CALCULO:	FECHA: 03/08/11	AGM–02–0204–PLA–M–0024
DIBUJO: S. Boerckel	REVISADO: J. Castillo	DISK. N°	
APROBADO: T. Koontz	DIBUJO:	ESC./PLOTEO:	
ARCHIVO:	APROBADO: M. Monticelli	ARCHIVO:	PAGINA: 1 DE: 5 — REV. 0

F_A1_11 – 841x594mm

LINEA DE CORTE DE ORIGINAL
LINEA DE CORTE DE COPIA

N: PLANO: AGM-02-0204-PLA-M-0024 | 0

I M P O R T A N T E

ESTE PLANO FUE ELABORADO EN AUTOCAD V.2008
CUALQUIER MODIFICACION REALIZADA EN CAMPO DEBERA SER NOTIFICADO A LA UNIDAD RESPONSABLE.
QUEDA PROHIBIDO CORREGIR ESTE PLANO SIN AUTORIZACION DE ESTA UNIDAD.

ALL DIMENSIONS IN BRACKETS [ ] ARE MILLIMETER; EXPRESSED DIMENSIONS ARE INCHES

ALL PRESSURES IN BRACKETS < > ARE kgf/cm²; EXPRESSED PRESSURES ARE PSI

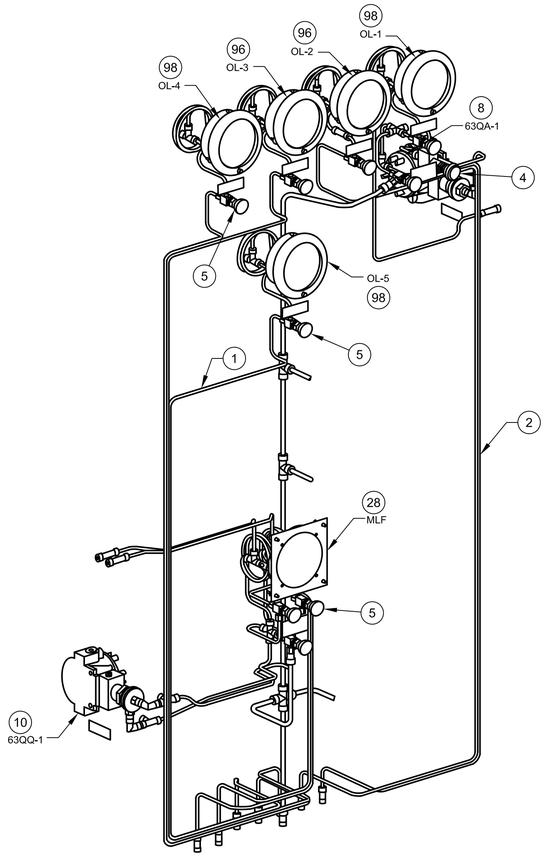

ISOMETRIC VIEW
(LOOKING AT FRONT OF LUBE OIL (OL) GAUGES)

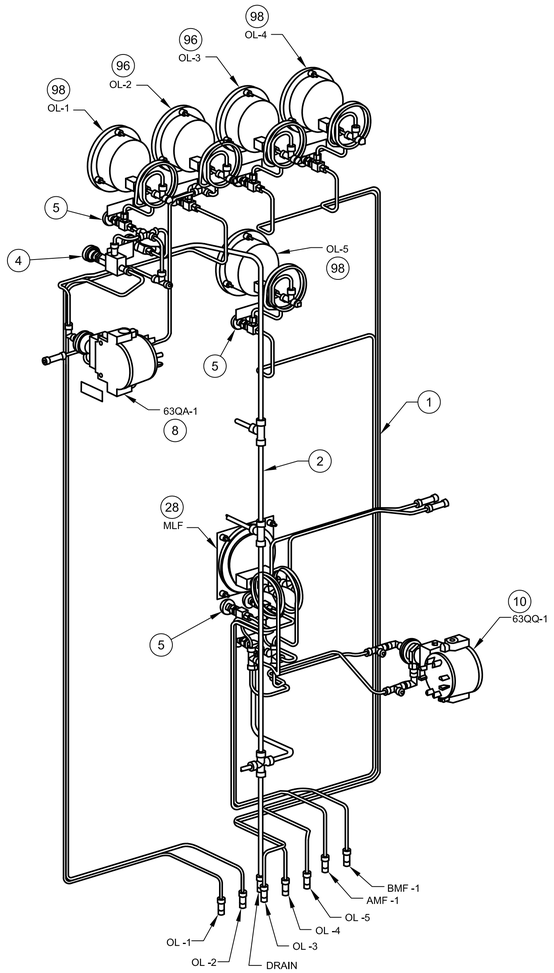

ISOMETRIC VIEW
(LOOKING AT BACK OF LUBE OIL (OL) GAUGES)

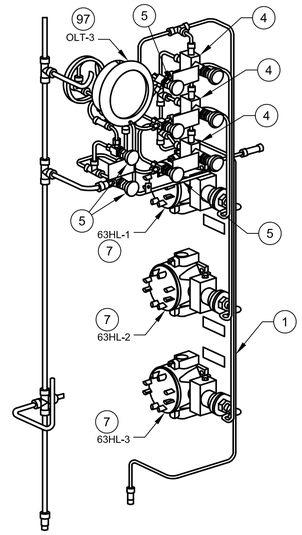

ISOMETRIC VIEW
(LOOKING AT FRONT OF TRIP OIL (OLT) GAUGES)

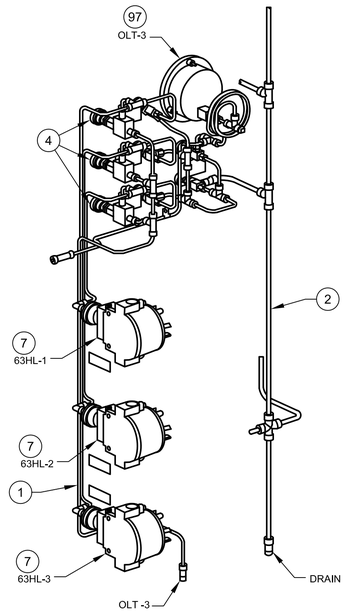

ISOMETRIC VIEW
(LOOKING AT BACK OF TRIP OIL (OLT) GAUGES)

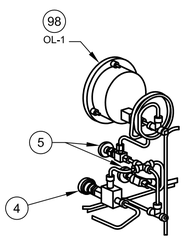

GAUGE ARRANGEMENT
OL-1
98

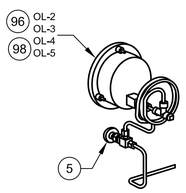

GAUGE ARRANGEMENT
OL-2
(SIMILAR TO OL-3,OL-4 & OL-5)
96 98

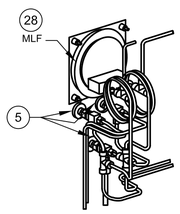

GAUGE ARRANGEMENT
MLF
28

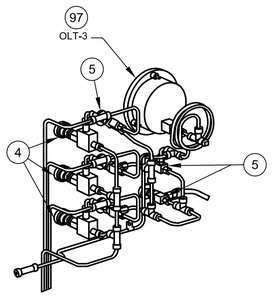

GAUGE ARRANGEMENT
OLT-3
97

0	03/08/11	ISSUED FOR CONSTRUCTION	SAB	CB	TK
REV.	FECHA	REVISIONES O MODIFICACIONES	DIBUJO	REVISO	APROBO

REF. FABRICANTE		
REF. FABRICANTE	FABRICANTE	O/C:

AGM-02-0204-PLA-I-0046	DEVICE SUMMARY		
N° DE DOCUMENTO	DESCRIPCIÓN	REV.	FECHA

DOCUMENTOS DE REFERENCIA

DERWICK ASSOCIATES CORP. | ProEnergy SERVICES | CORPOELEC CORPORACIÓN ELÉCTRICA NACIONAL | La Electricidad de Caracas | GERENCIA FUNCIONAL DE INGENIERÍA Y PROYECTOS | SENECA

AMPLIACIÓN DE LA CAPACIDAD DE GENERACIÓN Y TRANSPORTE DE ELECTRICIDAD EN LA ISLA DE MARGARITA

GAUGE CABINET ASSEMBLY – ACCESSORY
DUAL FUEL MOD. UNITS 298034 & 298035
(MLI 0926)

PLANO N°:	REV:		
PROYECTO N°: 409-2956-1			
CALCULO:	PROYECTO:	ESCALA: NONE	PLANO No:
REVISADO: C. Brown	CALCULO:	FECHA: 03/08/11	AGM-02-0204-PLA-M-0024
DIBUJO: S. Boerckel	REVISADO: J. Castillo	DISK. N°	
APROBADO: T. Koontz	DIBUJO:	ESC./PLOTEO:	
ARCHIVO:	APROBADO: M. Monticelli	ARCHIVO:	PAGINA: 2 DE: 5 REV. 0

F_A1_11 – 841x594mm

LINEA DE CORTE DE COPIA
LINEA DE CORTE DE ORIGINAL

LINEA DE CORTE DE ORIGINAL
LINEA DE CORTE DE COPIA

N° PLANO: AGM-02-0204-PLA-M-0024 | 0

I M P O R T A N T E

ESTE PLANO FUE ELABORADO EN AUTOCAD V.2008
CUALQUIER MODIFICACION REALIZADA EN CAMPO DEBERA SER NOTIFICADO A LA UNIDAD RESPONSABLE.
QUEDA PROHIBIDO CORREGIR ESTE PLANO SIN AUTORIZACION DE ESTA UNIDAD.

ALL DIMENSIONS IN BRACKETS [ ] ARE MILLIMETER; EXPRESSED DIMENSIONS ARE INCHES

ALL PRESSURES IN BRACKETS < > ARE kgf/cm²; EXPRESSED PRESSURES ARE PSI

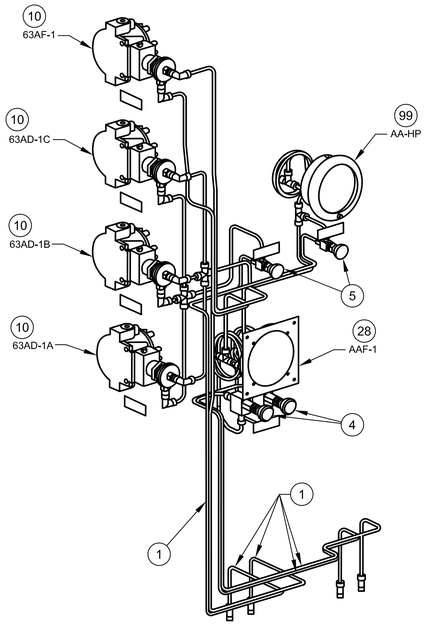

ISOMETRIC VIEW
(LOOKING AT FRONT OF ATOMIZING AIR GAUGES)

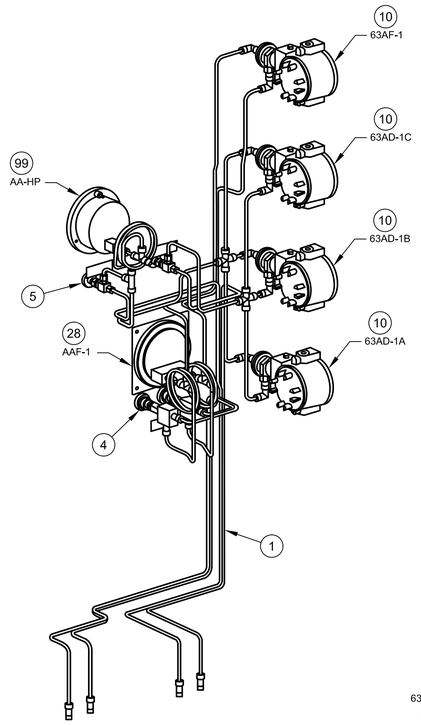

ISOMETRIC VIEW
(LOOKING AT BACK OF ATOMIZING AIR GAUGES)

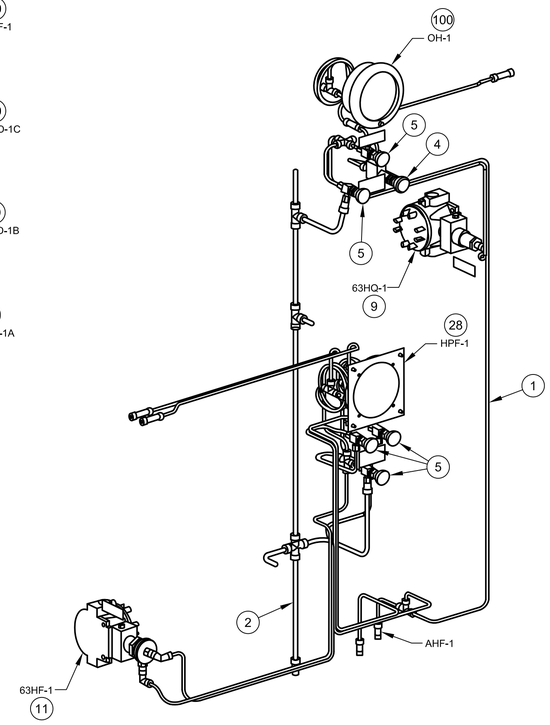

ISOMETRIC VIEW
(LOOKING AT FRONT OF HYDRAULIC SUPPLY GAUGES)

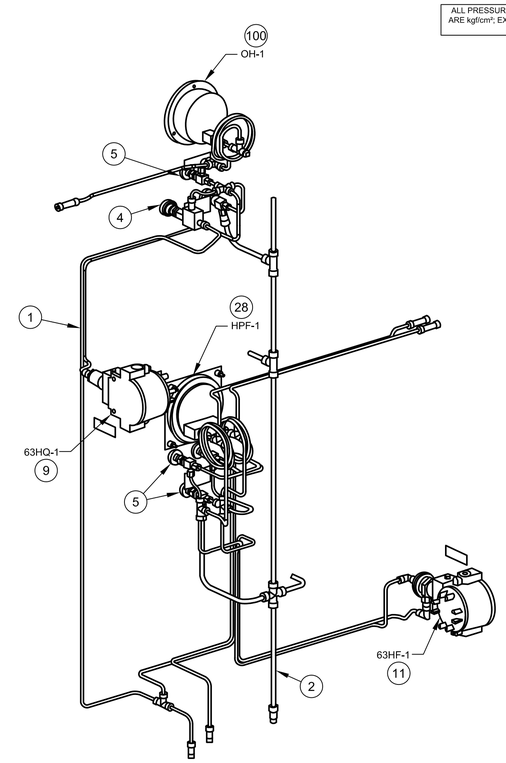

ISOMETRIC VIEW
(LOOKING AT BACK OF HYDRAULIC SUPPLY GAUGES)

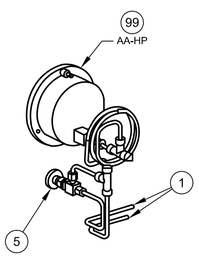

GAUGE ARRANGEMENT
AA-HP
(99)

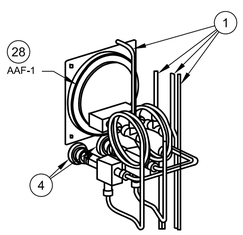

GAUGE ARRANGEMENT
AA TO/FROM FILTER
(28)

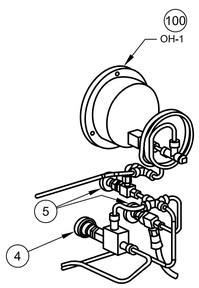

GAUGE ARRANGEMENT
OH-1
(100)

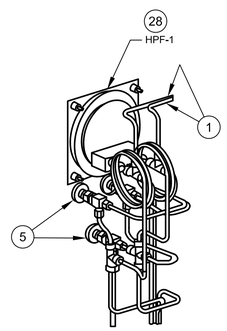

GAUGE ARRANGEMENT
HPF-1
(28)

REV.	FECHA	REVISIONES O MODIFICACIONES	DIBUJO	REVISO	APROBO
0	03/08/11	ISSUED FOR CONSTRUCTION	SAB	CB	TK

REF. FABRICANTE		
REF. FABRICANTE	FABRICANTE	O/C:

N° DE DOCUMENTO	DESCRIPCIÓN	REV.	FECHA
AGM-02-0204-PLA-I-0046	DEVICE SUMMARY		

DOCUMENTOS DE REFERENCIA

DERWICK ASSOCIATES CORP. | ProEnergy SERVICES | CORPOELEC CORPORACIÓN ELÉCTRICA NACIONAL | La Electricidad de Caracas | GERENCIA FUNCIONAL DE INGENIERÍA Y PROYECTOS | SENECA

AMPLIACIÓN DE LA CAPACIDAD DE GENERACIÓN Y TRANSPORTE DE ELECTRICIDAD EN LA ISLA DE MARGARITA

PLANO N°: | REV:

GAUGE CABINET ASSEMBLY – ACCESSORY
DUAL FUEL MOD. UNITS 298034 & 298035
(MLI 0926)

PROYECTO N°: 409-2956-1

CALCULO:	PROYECTO:	ESCALA: NONE	PLANO No: AGM-02-0204-PLA-M-0024
REVISADO: C. Brown	CALCULO:	FECHA: 03/08/11	
DIBUJO: S. Boerckel	REVISADO: J. Castillo	DISK. N°	
APROBADO: T. Koontz	DIBUJO:	ESC./PLOTEO:	
ARCHIVO:	APROBADO: M. Monticelli	ARCHIVO:	PAGINA: 3 DE: 5 — REV. 0

F_A1_11 – 841x594mm

LINEA DE CORTE DE COPIA
LINEA DE CORTE DE ORIGINAL

LINEA DE CORTE DE ORIGINAL
LINEA DE CORTE DE COPIA

N° PLANO: AGM-02-0204-PLA-M-0024 | 0

I M P O R T A N T E

ESTE PLANO FUE ELABORADO EN AUTOCAD V.2008
CUALQUIER MODIFICACION REALIZADA EN CAMPO DEBERA SER NOTIFICADO A LA UNIDAD RESPONSABLE.
QUEDA PROHIBIDO CORREGIR ESTE PLANO SIN AUTORIZACION DE ESTA UNIDAD.

ALL DIMENSIONS IN BRACKETS [ ] ARE MILLIMETER; EXPRESSED DIMENSIONS ARE INCHES

ALL PRESSURES IN BRACKETS < > ARE kgf/cm²; EXPRESSED PRESSURES ARE PSI

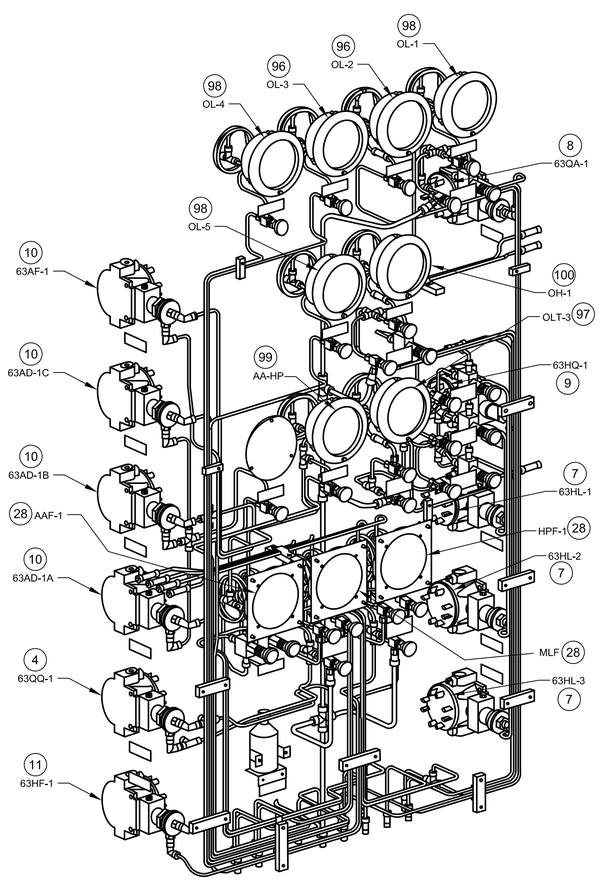

ISOMETRIC VIEW
(LOOKING AT FRONT OF GAUGES)

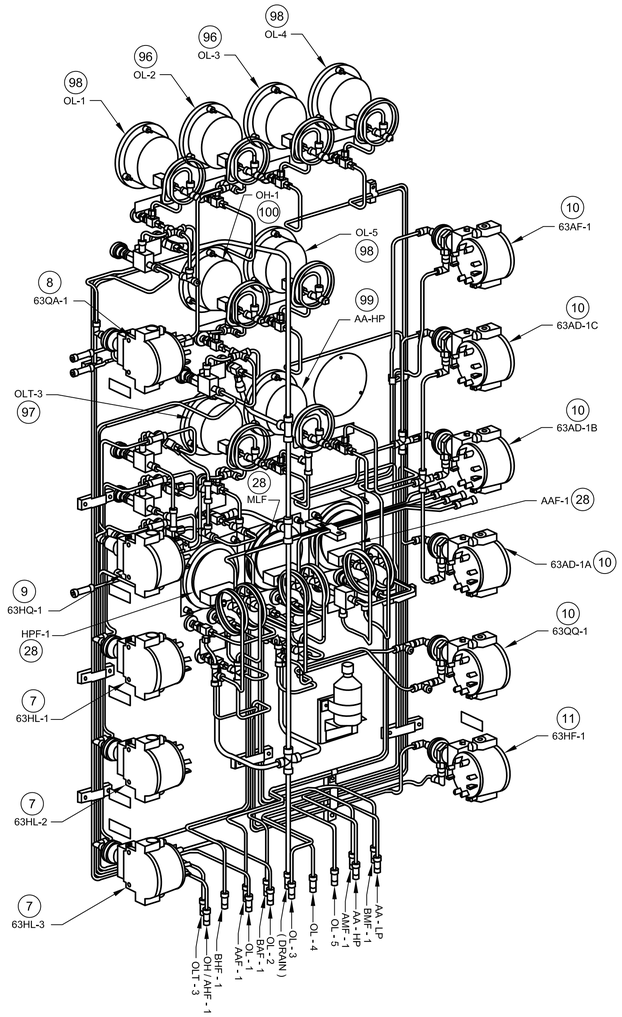

ISOMETRIC VIEW
(LOOKING AT BACK OF GAUGES)

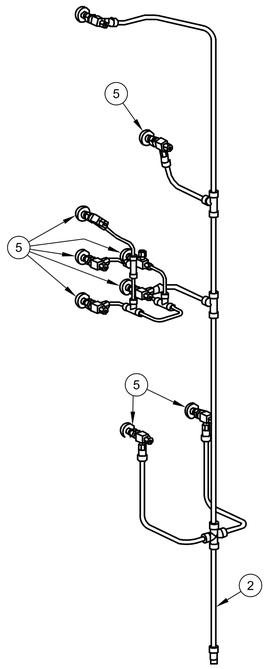

GAUGE DRAIN LINE

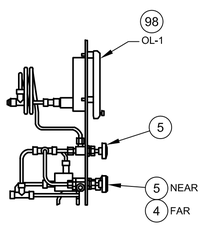

SECTION: G - 7 (SH 1)
OL - 1
98

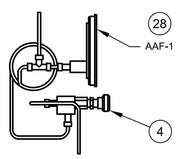

SECTION: G - 5 (SH 1)
AAF - 1
28

REV.	FECHA	REVISIONES O MODIFICACIONES	DIBUJO	REVISO	APROBO
0	03/08/11	ISSUED FOR CONSTRUCTION	SAB	CB	TK

REF. FABRICANTE		
REF. FABRICANTE	FABRICANTE	O/C:

N° DE DOCUMENTO	DESCRIPCIÓN	REV.	FECHA
AGM-02-0204-PLA-I-0046	DEVICE SUMMARY		

DOCUMENTOS DE REFERENCIA

DERWICK / ProEnergy SERVICES / CORPOELEC / La Electricidad de Caracas / SENECA

AMPLIACIÓN DE LA CAPACIDAD DE GENERACIÓN Y TRANSPORTE DE ELECTRICIDAD EN LA ISLA DE MARGARITA

GAUGE CABINET ASSEMBLY – ACCESSORY
DUAL FUEL MOD. UNITS 298034 & 298035
(MLI 0926)

PLANO N°:	REV:		
PROYECTO N°: 409-2956-1			
CALCULO:	PROYECTO:	ESCALA: NONE	PLANO No: AGM-02-0204-PLA-M-0024
REVISADO: C. Brown	CALCULO:	FECHA: 03/08/11	
DIBUJO: S. Boerckel	REVISADO: J. Castillo	DISK. N°	
APROBADO: T. Koontz	DIBUJO:	ESC./PLOTEO:	
ARCHIVO:	APROBADO: M. Monticelli	ARCHIVO:	PAGINA: 4 DE: 5 — REV. 0

F_A1_11 – 841x594mm

LINEA DE CORTE DE COPIA
LINEA DE CORTE DE ORIGINAL

LINEA DE CORTE DE ORIGINAL
LINEA DE CORTE DE COPIA

0	AGM-02-0204-PLA-M-0024
	N° PLANO:

IMPORTANTE

ESTE PLANO FUE ELABORADO EN AUTOCAD V.2008
CUALQUIER MODIFICACION REALIZADA EN CAMPO DEBERA SER NOTIFICADO A LA UNIDAD RESPONSABLE.
QUEDA PROHIBIDO CORREGIR ESTE PLANO SIN AUTORIZACION DE ESTA UNIDAD.

ALL DIMENSIONS IN BRACKETS [ ] ARE MILLIMETER; EXPRESSED DIMENSIONS ARE INCHES

ALL PRESSURES IN BRACKETS < > ARE kgf/cm²; EXPRESSED PRESSURES ARE PSI

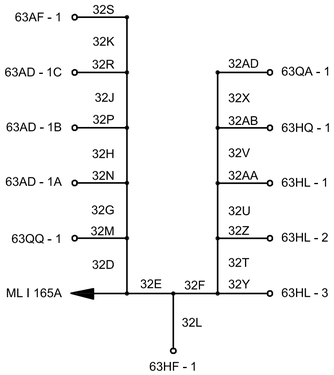

CONDUIT SCHEMATIC

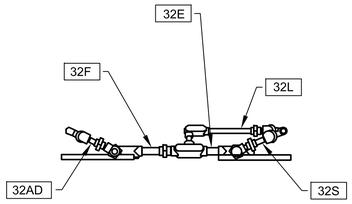

VIEW E - 5

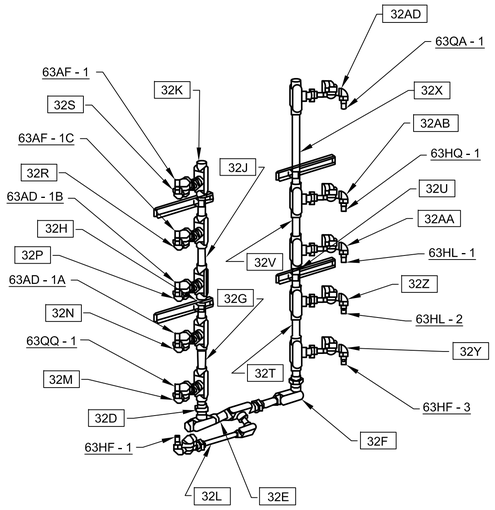

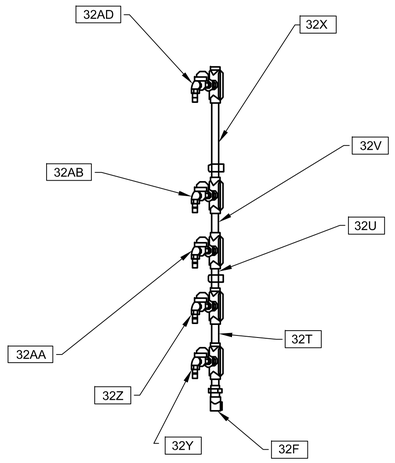

VIEW A - 7

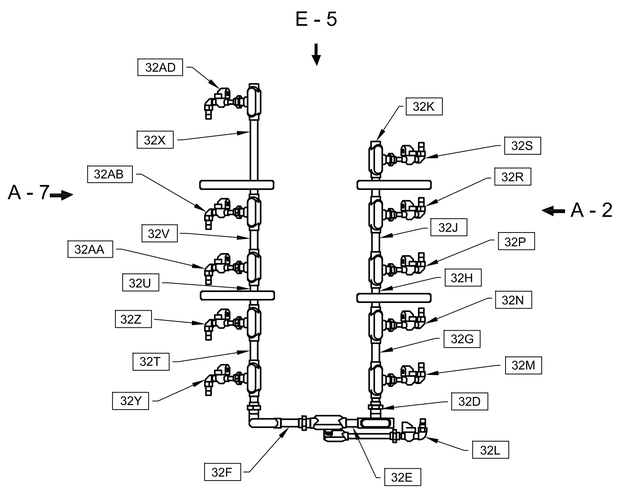

(LOOKING AT REAR OF CABINET

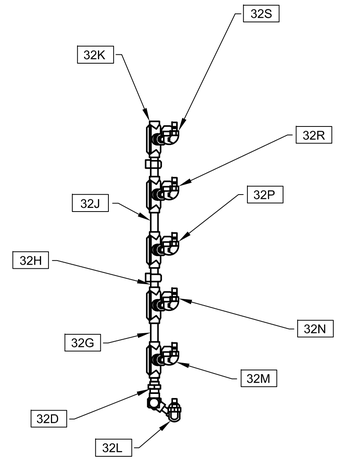

VIEW A - 2

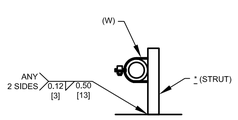

DETAIL	AV *	BV *	CV *	DV *	EV *
SIZE	0.50 [13]	1.00 [25]	1.50 [38]	2.00 [51]	2.50 [64]
W (CLAMP)	-	1.20 [30]	-	-	-

SUPPORT DETAIL

REV.	FECHA	REVISIONES O MODIFICACIONES	DIBUJO	REVISO	APROBO
0	03/08/11	ISSUED FOR CONSTRUCTION	SAB	CB	TK

REF. FABRICANTE		
REF. FABRICANTE	FABRICANTE	O/C:

N° DE DOCUMENTO	DESCRIPCIÓN	REV.	FECHA
AGM-02-0204-PLA-I-0046	DEVICE SUMMARY		

DOCUMENTOS DE REFERENCIA

DERWICK ASSOCIATES CORP. · ProEnergy SERVICES · CORPOELEC CORPORACIÓN ELÉCTRICA NACIONAL · La Electricidad de Caracas · GERENCIA FUNCIONAL DE INGENIERÍA Y PROYECTOS · SENECA

AMPLIACIÓN DE LA CAPACIDAD DE GENERACIÓN Y TRANSPORTE DE ELECTRICIDAD EN LA ISLA DE MARGARITA

GAUGE CABINET ASSEMBLY – ACCESSORY
DUAL FUEL MOD. UNITS 298034 & 298035
(MLI 0926)

PLANO N°:	REV:		
PROYECTO N°: 409-2956-1			
CALCULO:	PROYECTO:	ESCALA: NONE	PLANO No: AGM-02-0204-PLA-M-0024
REVISADO: C. Brown	CALCULO:	FECHA: 03/08/11	
DIBUJO: S. Boerckel	REVISADO: J. Castillo	DISK. N°	
APROBADO: T. Koontz	DIBUJO:	ESC./PLOTEO:	
ARCHIVO:	APROBADO: M. Monticelli	ARCHIVO:	PAGINA: 5 DE: 5 REV. 0

F_A1_11 – 841x594mm

LINEA DE CORTE DE COPIA
LINEA DE CORTE DE ORIGINAL

N° PLANO: AGM-02-0204-PLA-M-0025 | 0

NOTES:

1. GENERAL MACHINING APPLIED PRACTICES ARE PER 348A9200.
2. PIPING APPLIED PRACTICES ARE PER 351A3700.
3. STRUCTURAL WELDS ARE PER P8A–AG1, FIGURE PER APPENDIX III, FILLER METAL COLUMN AB PER APPENDIX IXII.
4. INSTALL AND SUPPORT TUBING PER 215A4435.
5. INSTALL TUBE UNIONS AS REQUIRED.
6. TUBE RUNS ARE ILLUSTRATIVE ONLY.
7. CLEAN AND PAINT PER MLI 0108.
8. DO NOT CAUSTIC CLEAN FLEXIBLE METAL HOSES.
9. FLOW DIRECTION IS DESIGNATED WITH AN ARROW SYMBOL.
10. SLOPE .25" PER 12" [6 PER 305] MINIMUM.
11. SYSTEM PARAMETERS AND SPECIFICATIONS ARE BASED ON TYPICAL REQUIREMENTS FOR 7EA DLN 1.0 DUAL FUEL SYSTEM AND CUSTOMER SCOPE OF WORK.
12. THIS DRAWINGS IS A REPRESENTATION OF DUAL FUEL CONFIGURATION WHICH INCLUDES ORIGINAL, MODIFIED, AND NEW EQUIPMENT.

IMPORTANTE

ESTE PLANO FUE ELABORADO EN AUTOCAD V.2008
CUALQUIER MODIFICACION REALIZADA EN CAMPO DEBERA SER NOTIFICADO A LA UNIDAD RESPONSABLE.
QUEDA PROHIBIDO CORREGIR ESTE PLANO SIN AUTORIZACION DE ESTA UNIDAD.

ALL DIMENSIONS IN BRACKETS [ ] ARE MILLIMETER; EXPRESSED DIMENSIONS ARE INCHES

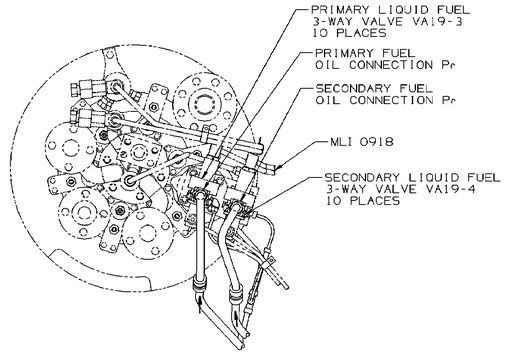

DETAIL F-3
(10 PLACES)

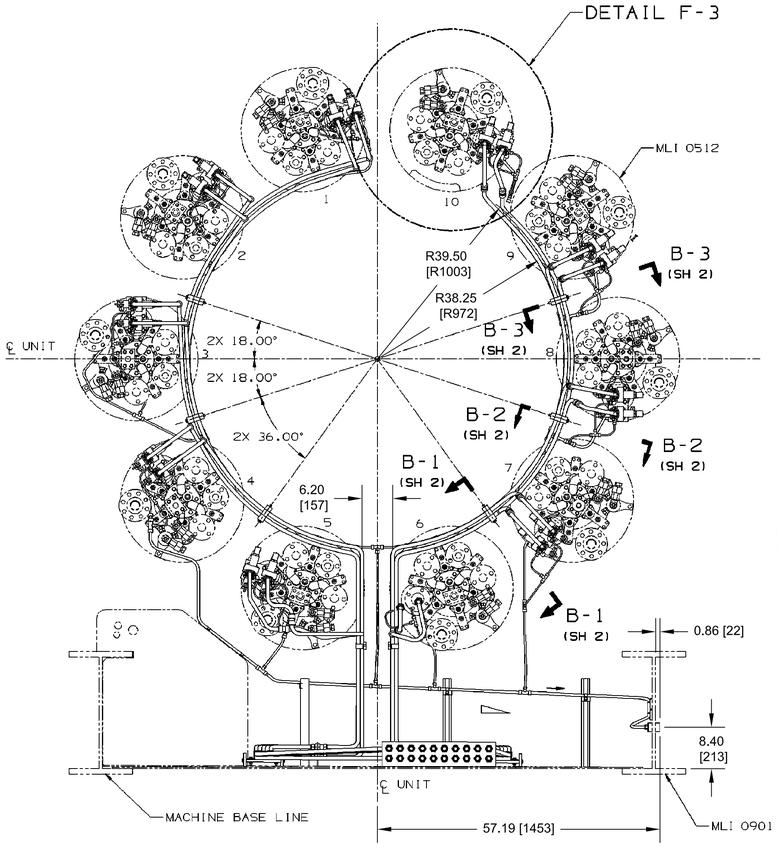

VIEW LOOKING DOWNSTREAM

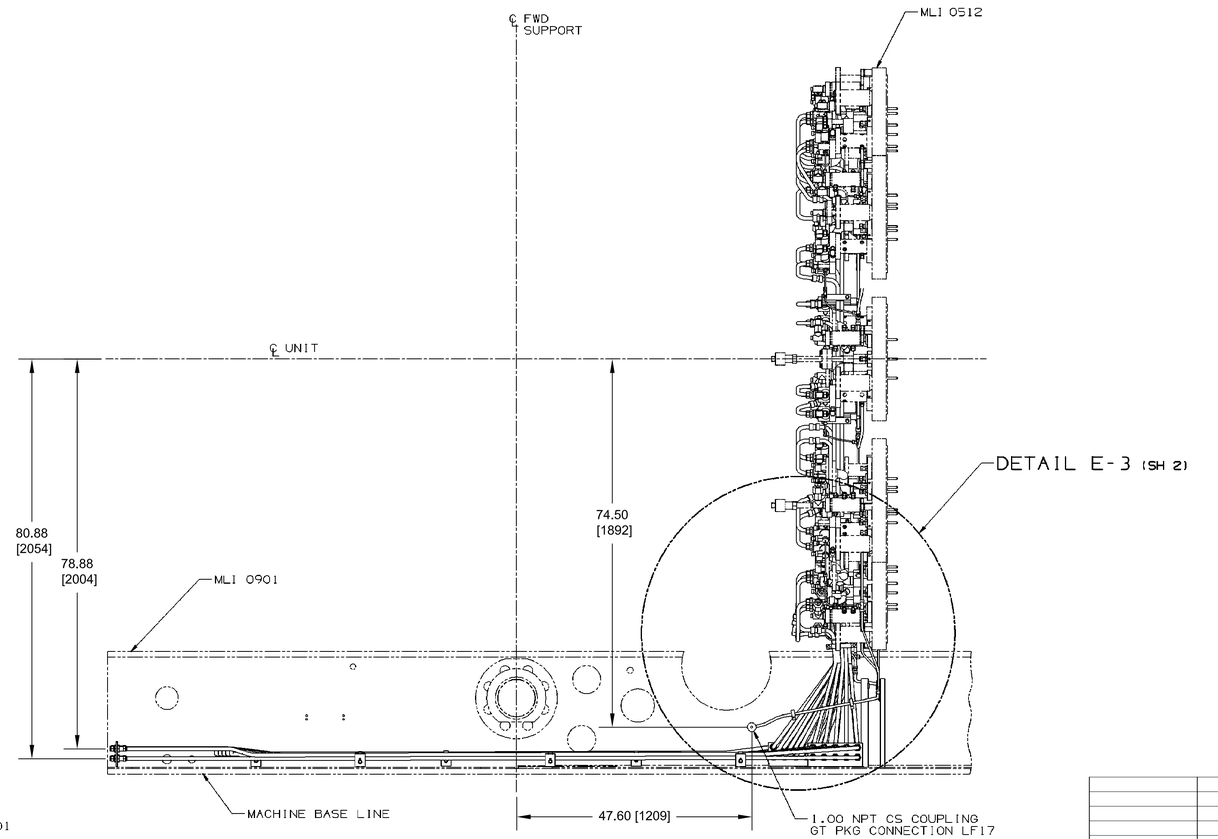

RIGHT SIDE I-BEAM REMOVED
FOR CLARITY

REV.	FECHA	REVISIONES O MODIFICACIONES	DIBUJO	REVISO	APROBO
0	21/07/11	ISSUED FOR CONSTRUCTION	SAB	CB	TK

REF. FABRICANTE		
REF. FABRICANTE	FABRICANTE	O/C:

N° DE DOCUMENTO	DESCRIPCIÓN	REV.	FECHA
AGM-02-0204-PLA-I-0019	FUEL NOZZLE PURGE PANEL ASSEMBLY (MLI-0918)		
AGM-02-0204-PLA-M-0009	DUAL FUEL NOZZLE ASSEMBLY – PRIMARY (MLI-0512)		

DOCUMENTOS DE REFERENCIA

DERWICK ASSOCIATES CORP. | ProEnergy SERVICES | CORPOELEC CORPORACIÓN ELÉCTRICA NACIONAL | La Electricidad de Caracas | GERENCIA FUNCIONAL DE INGENIERIA Y PROYECTOS | SENECA

AMPLIACIÓN DE LA CAPACIDAD DE GENERACIÓN Y TRANSPORTE DE ELECTRICIDAD EN LA ISLA DE MARGARITA

FUEL OIL – TURBINE COMPARTMENT
DUAL FUEL MOD. UNITS 298034 & 298035
(MLI 0961)

PLANO N°:	REV:		
PROYECTO N°: 409-2956-1			
CALCULO:	PROYECTO:	ESCALA: 1:15	PLANO No: AGM-02-0204-PLA-M-0025
REVISADO: C. Brown	CALCULO:	FECHA: 21/07/11	
DIBUJO: S. Boerckel	REVISADO: J. Castillo	DISK. N°	
APROBADO: T. Koontz	DIBUJO:	ESC./PLOTEO:	
ARCHIVO:	APROBADO: M. Monticelli	ARCHIVO:	PAGINA: 1 DE: 4 — REV. 0

F_A1_11 – 841x594mm

N° PLANO: AGM-02-0204-PLA-M-0025 | 0

IMPORTANTE

ESTE PLANO FUE ELABORADO EN AUTOCAD V.2008
CUALQUIER MODIFICACION REALIZADA EN CAMPO DEBERA SER NOTIFICADO A LA UNIDAD RESPONSABLE.
QUEDA PROHIBIDO CORREGIR ESTE PLANO SIN AUTORIZACION DE ESTA UNIDAD.

ALL DIMENSIONS IN BRACKETS [ ] ARE MILLIMETER; EXPRESSED DIMENSIONS ARE INCHES

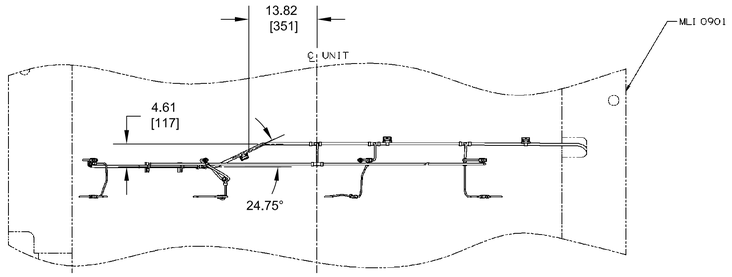

SECTION F-6

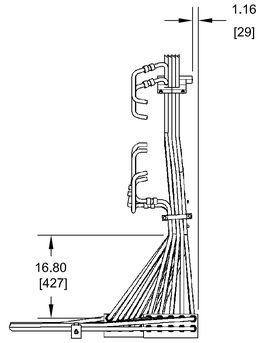

DETAIL E-3 (SH 1)
(DRAIN TUBING AND BACKGROUNDS REMOVED FOR CLARITY)

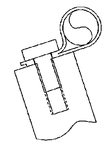

DETAIL D-2
(6 PLACES)

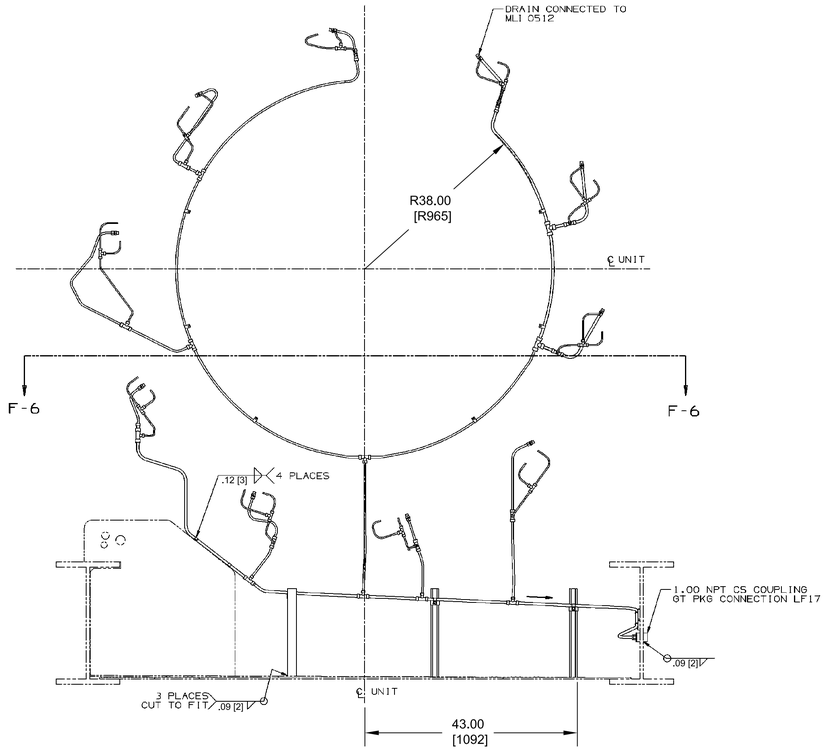

DRAIN ARRANGEMENT
(VIEW LOOKING DOWNSTREAM)

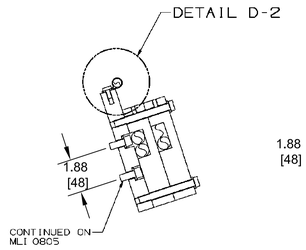

SECTION B-3 (SH1)
(2 PLACES)

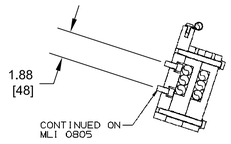

SECTION B-2 (SH1)
(2 PLACES)

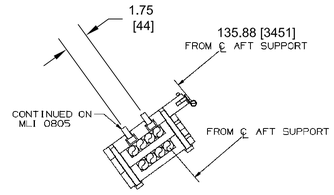

SECTION B-1 (SH1)
(2 PLACES)

N° DE DOCUMENTO	DESCRIPCIÓN		REV.	FECHA
AGM-02-0204-PLA-I-0019	FUEL NOZZLE PURGE PANEL ASSEMBLY	(MLI-0918)		
AGM-02-0204-PLA-M-0009	DUAL FUEL NOZZLE ASSEMBLY – PRIMARY	(MLI-0512)		

DOCUMENTOS DE REFERENCIA

REV.	FECHA	REVISIONES O MODIFICACIONES	DIBUJO	REVISO	APROBO
0	21/07/11	ISSUED FOR CONSTRUCTION	SAB	CB	TK

REF. FABRICANTE			
REF. FABRICANTE	FABRICANTE	O/C:	

DERWICK ASSOCIATES CORP. | ProEnergy SERVICES | CORPOELEC CORPORACIÓN ELÉCTRICA NACIONAL | La Electricidad de Caracas | GERENCIA FUNCIONAL DE INGENIERIA Y PROYECTOS | SENECA

AMPLIACIÓN DE LA CAPACIDAD DE GENERACIÓN Y TRANSPORTE DE ELECTRICIDAD EN LA ISLA DE MARGARITA

FUEL OIL – TURBINE COMPARTMENT
DUAL FUEL MOD. UNITS 298034 & 298035
(MLI 0961)

PLANO N°:	REV:		
PROYECTO N°: 409-2956-1			
CALCULO:	PROYECTO:	ESCALA: 1:15	PLANO No:
REVISADO: C. Brown	CALCULO:	FECHA: 21/07/11	AGM-02-0204-PLA-M-0025
DIBUJO: S. Boerckel	REVISADO: J. Castillo	DISK. N°	
APROBADO: T. Koontz	DIBUJO:	ESC./PLOTEO:	REV. 0
ARCHIVO:	APROBADO: M. Monticelli	ARCHIVO:	PAGINA: 2 DE: 4

F_A1_11 – 841x594mm

N° PLANO: AGM-02-0204-PLA-M-0025 | 0

IMPORTANTE
ESTE PLANO FUE ELABORADO EN AUTOCAD V.2008
CUALQUIER MODIFICACION REALIZADA EN CAMPO DEBERA SER NOTIFICADO A LA UNIDAD RESPONSABLE.
QUEDA PROHIBIDO CORREGIR ESTE PLANO SIN AUTORIZACION DE ESTA UNIDAD.

ALL DIMENSIONS IN BRACKETS [ ] ARE MILLIMETER; EXPRESSED DIMENSIONS ARE INCHES

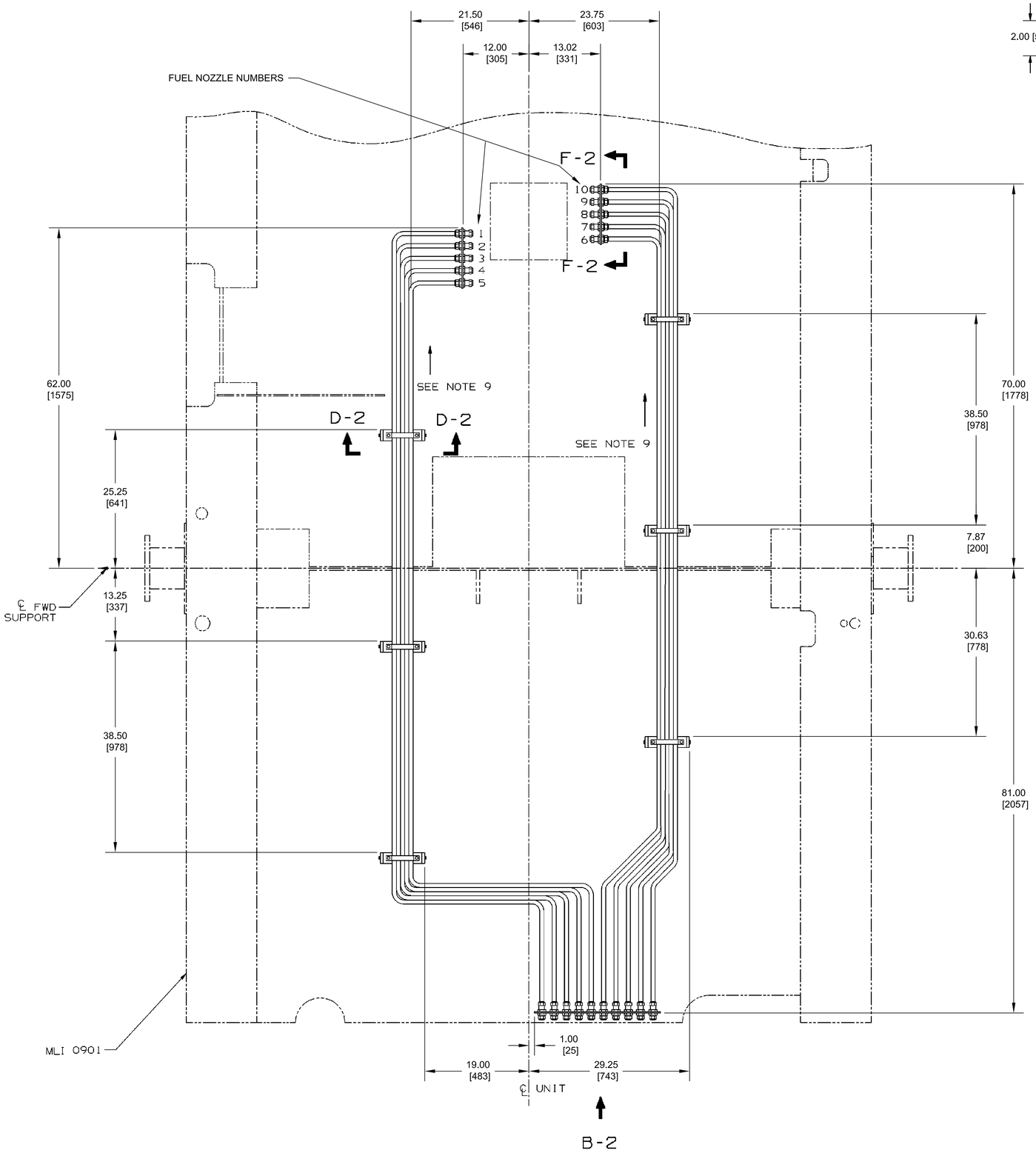

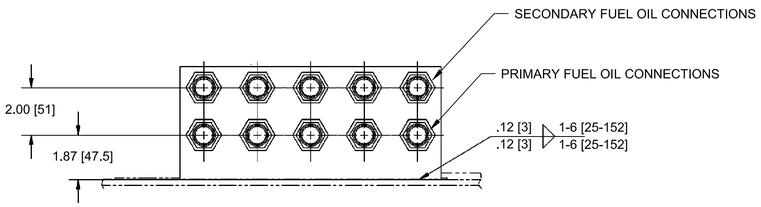

SECTION F-2
(2 PLACES)

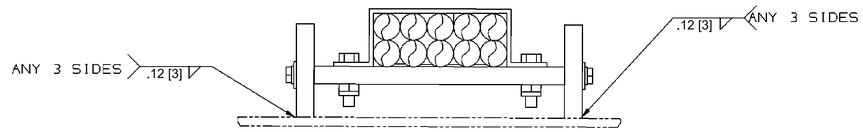

SECTION D-2
(6 PLACES)

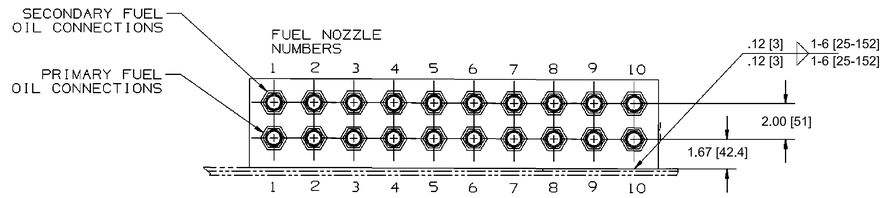

VIEW B-2

N° DE DOCUMENTO	DESCRIPCIÓN		REV.	FECHA
AGM-02-0204-PLA-I-0019	FUEL NOZZLE PURGE PANEL ASSEMBLY	(MLI-0918)		
AGM-02-0204-PLA-M-0009	DUAL FUEL NOZZLE ASSEMBLY – PRIMARY	(MLI-0512)		

DOCUMENTOS DE REFERENCIA

REV.	FECHA	REVISIONES O MODIFICACIONES	DIBUJO	REVISO	APROBO
0	21/07/11	ISSUED FOR CONSTRUCTION	SAB	CB	TK

REF. FABRICANTE		
REF. FABRICANTE	FABRICANTE	O/C:

DERWICK ASSOCIATES CORP. · ProEnergy SERVICES · CORPOELEC CORPORACIÓN ELÉCTRICA NACIONAL · La Electricidad de Caracas · GERENCIA FUNCIONAL DE INGENIERIA Y PROYECTOS · SENECA

AMPLIACIÓN DE LA CAPACIDAD DE GENERACIÓN Y TRANSPORTE DE ELECTRICIDAD EN LA ISLA DE MARGARITA

FUEL OIL – TURBINE COMPARTMENT
DUAL FUEL MOD. UNITS 298034 & 298035
(MLI 0961)

PLANO N°:	REV:		
PROYECTO N°: 409-2956-1			
CALCULO:	PROYECTO:	ESCALA: 1:10	PLANO No: AGM-02-0204-PLA-M-0025
REVISADO: C. Brown	CALCULO:	FECHA: 21/07/11	
DIBUJO: S. Boerckel	REVISADO: J. Castillo	DISK. N°	
APROBADO: T. Koontz	DIBUJO:	ESC./PLOTEO:	REV. 0
ARCHIVO:	APROBADO: M. Monticelli	ARCHIVO:	PAGINA: 3 DE: 4

F_A1_11 – 841x594mm

Nº PLANO:	
AGM-02-0204-PLA-M-0025	0

IMPORTANTE

ESTE PLANO FUE ELABORADO EN AUTOCAD V.2008
CUALQUIER MODIFICACION REALIZADA EN CAMPO DEBERA SER NOTIFICADO A LA UNIDAD RESPONSABLE.
QUEDA PROHIBIDO CORREGIR ESTE PLANO SIN AUTORIZACION DE ESTA UNIDAD.

ALL DIMENSIONS IN BRACKETS [ ] ARE MILLIMETER; EXPRESSED DIMENSIONS ARE INCHES

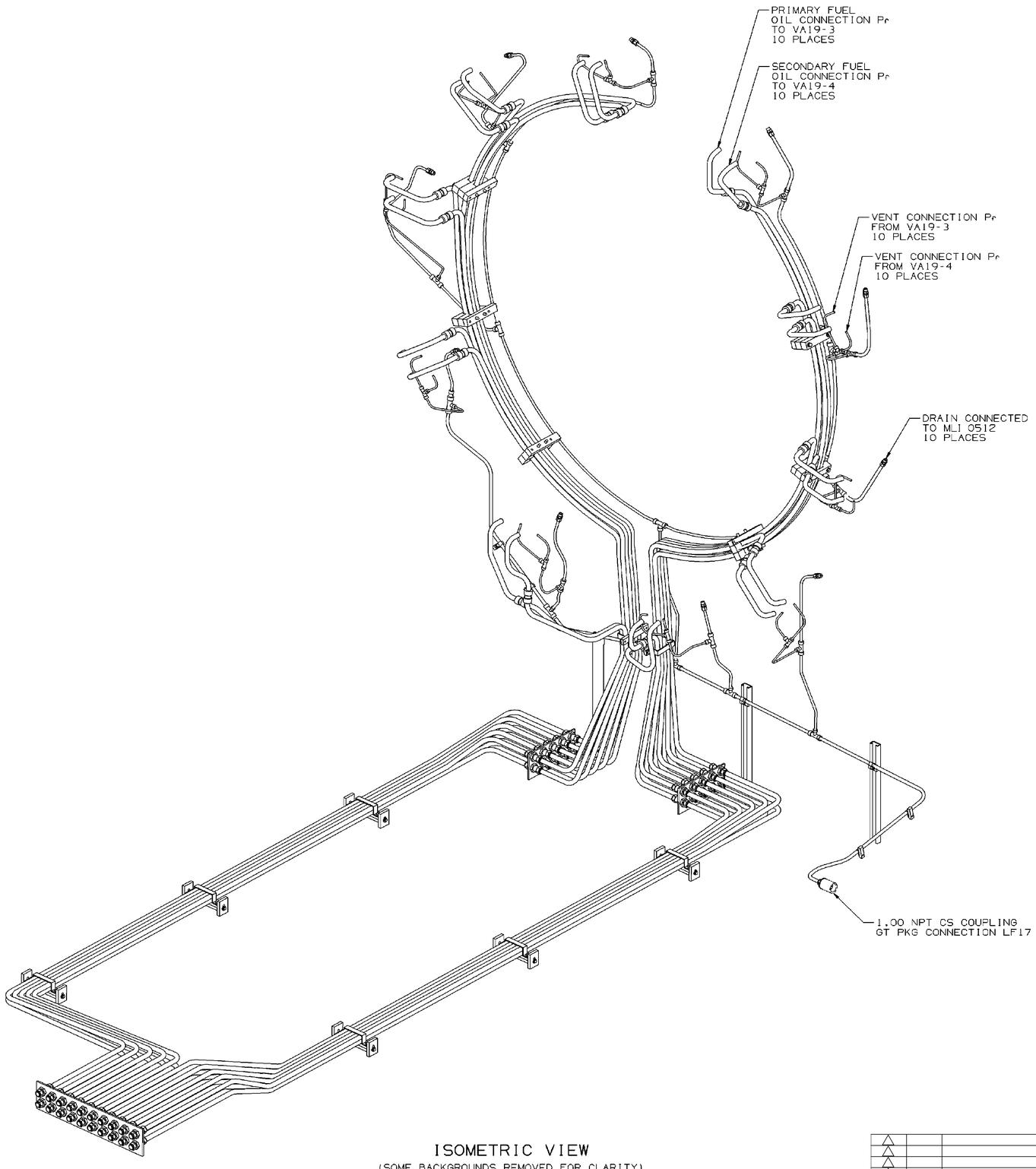

ISOMETRIC VIEW
(SOME BACKGROUNDS REMOVED FOR CLARITY)

REV.	FECHA	REVISIONES O MODIFICACIONES	DIBUJO	REVISO	APROBO
0	21/07/11	ISSUED FOR CONSTRUCTION	SAB	CB	TK

REF. FABRICANTE		
REF. FABRICANTE	FABRICANTE	O/C:

Nº DE DOCUMENTO	DESCRIPCIÓN	REV.	FECHA
AGM-02-0204-PLA-I-0019	FUEL NOZZLE PURGE PANEL ASSEMBLY		
AGM-02-0204-PLA-M-0009	DUAL FUEL NOZZLE ASSEMBLY – PRIMARY		

DOCUMENTOS DE REFERENCIA

DERWICK ASSOCIATES CORP. · ProEnergy SERVICES · CORPOELEC CORPORACIÓN ELÉCTRICA NACIONAL · La Electricidad de Caracas · GERENCIA FUNCIONAL DE INGENIERIA Y PROYECTOS · SENECA

AMPLIACIÓN DE LA CAPACIDAD DE GENERACIÓN Y TRANSPORTE DE ELECTRICIDAD EN LA ISLA DE MARGARITA
FUEL OIL – TURBINE COMPARTMENT
DUAL FUEL MOD. UNITS 298034 & 298035
(MLI 0961)

PLANO Nº:	REV:		
PROYECTO Nº: 409-2956-1			
CALCULO:	PROYECTO:	ESCALA: NONE	PLANO No: AGM-02-0204-PLA-M-0025
REVISADO: C. Brown	CALCULO:	FECHA: 21/07/11	
DIBUJO: S. Boerckel	REVISADO: J. Castillo	DISK. Nº	
APROBADO: T. Koontz	DIBUJO:	ESC./PLOTEO:	REV. 0
ARCHIVO:	APROBADO: M. Monticelli	ARCHIVO:	PAGINA: 4 DE: 4

F_A1_11 – 841x594mm

0	N° PLANO: AGM-02-0204-PLA-M-0026

NOTES:

1. GENERAL MACHINING APPLIED PRACTICES ARE PER 348A9200.
2. PIPING APPLIED PRACTICES ARE PER 351A3700.
3. PIPING WELDS ARE PER P8A-AG3, FIGURE PER APPENDIX II, FILLER METAL COLUMN AE-L PER APPENDIX I. ASSEMBLY WELDS ARE DESIGNATED WITH A SYMBOL "X", IF APPLICABLE.
4. STRUCTURAL WELDS ARE PER P8A-AG1, FIGURE PER APPENDIX III. FILLER METAL COLUMN AB PER APPENDIX IXII.
5. CLEAN AND PAINT PER MLI 0108.
6. TORQUE BOLTS AND STUDS PER 248A4158.
7. DO NOT CAUSTIC CLEAN FLEXIBLE METAL HOSES.
8. ENSURE THAT FLEXIBLE METAL HOSES ARE INSTALLED IN A STRAIN FREE CONDITION.
9. SYSTEM PARAMETERS AND SPECIFICATIONS ARE BASED ON TYPICAL REQUIREMENTS FOR 7EA DLN 1.0 DUAL FUEL SYSTEMS AND CUSTOMER SCOPE OF WORK.
10. THIS DRAWING IS A REPRESENTATION OF DUAL FUEL CONFIGURATION WHICH INCLUDES ORIGINAL, MODIFIED, AND NEW EQUIPMENT.

PARTS LIST

ITEM	QTY	DESCRIPTION	VENDOR / PART No
1	1	ATOMIZING AIR HEADER - ASSEMBLY	Pro Energy Services
2	10	1-1/2" FLEX HOSE	Microflex / AA-15

IMPORTANTE
ESTE PLANO FUE ELABORADO EN AUTOCAD V.2008 CUALQUIER MODIFICACION REALIZADA EN CAMPO DEBERA SER NOTIFICADO A LA UNIDAD RESPONSABLE.
QUEDA PROHIBIDO CORREGIR ESTE PLANO SIN AUTORIZACION DE ESTA UNIDAD.

ALL DIMENSIONS IN BRACKETS [ ] ARE MILLIMETER, EXPRESSED DIMENSIONS ARE INCHES

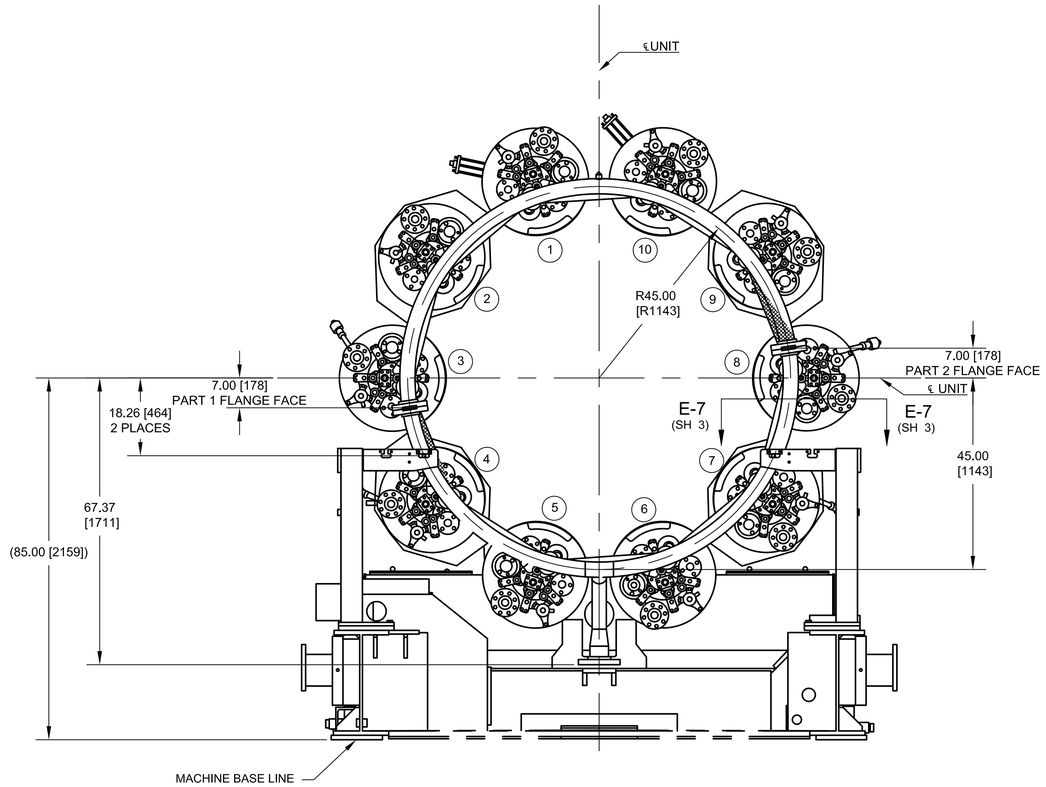

VIEW LOOKING DOWNSTREAM

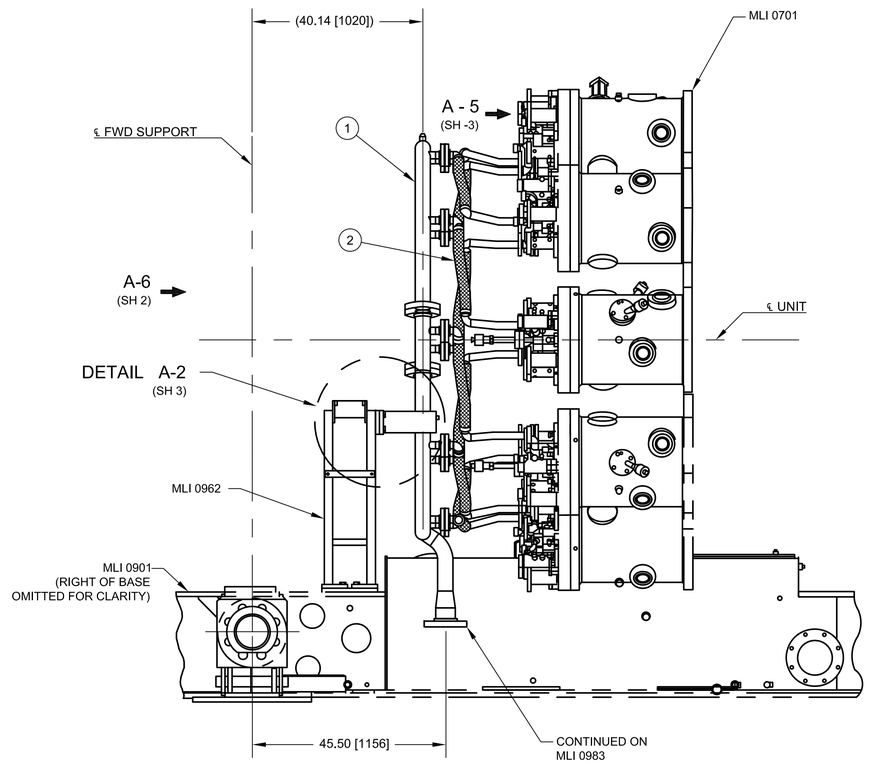

N° DE DOCUMENTO	DESCRIPCIÓN	REV.	FECHA
AGM-02-0204-PLA-M-0031	ATOMIZING AIR LOWER PIPING ARRANGEMENT (MLI 0983)		

DOCUMENTOS DE REFERENCIA

REV.	FECHA	REVISIONES O MODIFICACIONES	DIBUJO	REVISO	APROBO
0	06/06/23	ISSUED FOR REVIEW	SAB	CB	TK

REF. FABRICANTE		
REF. FABRICANTE	FABRICANTE	O/C:

DERWICK Derwick Associates Corp. · ProEnergy Services · CORPOELEC Corporación Eléctrica Nacional · La Electricidad de Caracas · Gerencia Funcional de Ingeniería y Proyectos · SENECA

AMPLIACIÓN DE LA CAPACIDAD DE GENERACIÓN Y TRANSPORTE DE ELECTRICIDAD EN LA ISLA DE MARGARITA

ATOMIZING AIR – TURBINE COMPARTMENT DUAL FUEL MOD. UNITS 298034 & 298035 (MLI 065)

PLANO N°:	REV:	PROYECTO N°: 409-2956-1	
CALCULO:	PROYECTO:	ESCALA: NONE	PLANO No: AGM-02-0204-PLA-M-0026
REVISADO: C. Brown	CALCULO:	FECHA: 06/06/11	
DIBUJO: S. Boerckel	REVISADO: J. Castillo	DISK. N°	
APROBADO: T. Koontz	DIBUJO:	ESC./PLOTEO:	
ARCHIVO:	APROBADO: M. Monticelli	ARCHIVO:	PAGINA: 1 DE: 3 — REV. 0

F_A1_11 – 841x594mm

LINEA DE CORTE DE ORIGINAL
LINEA DE CORTE DE COPIA

N° PLANO: AGM-02-0204-PLA-M-0026 | 0

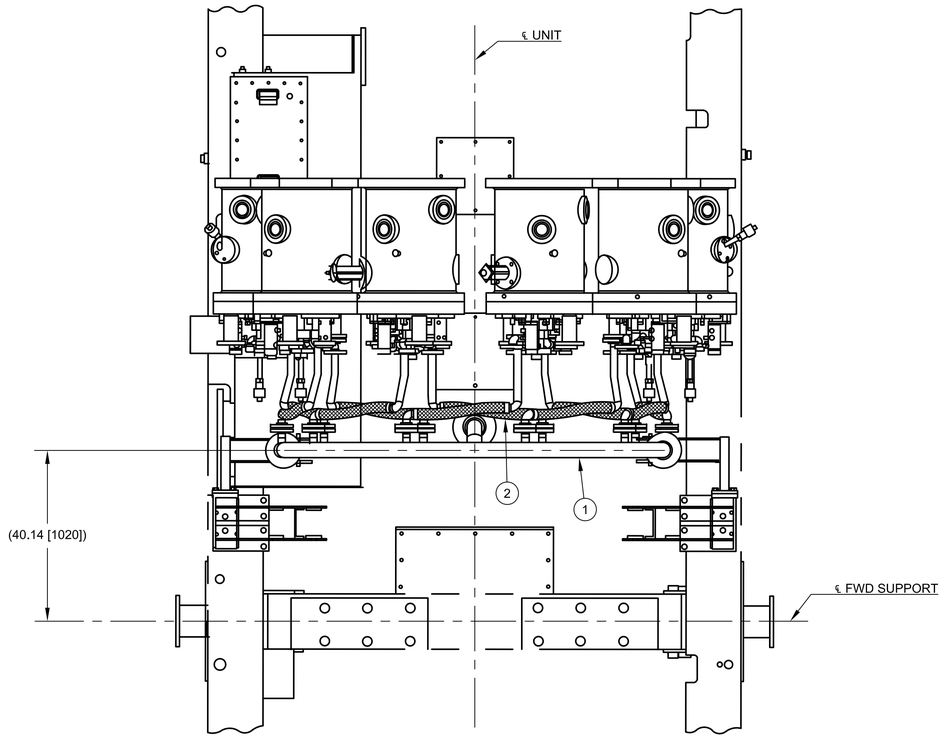

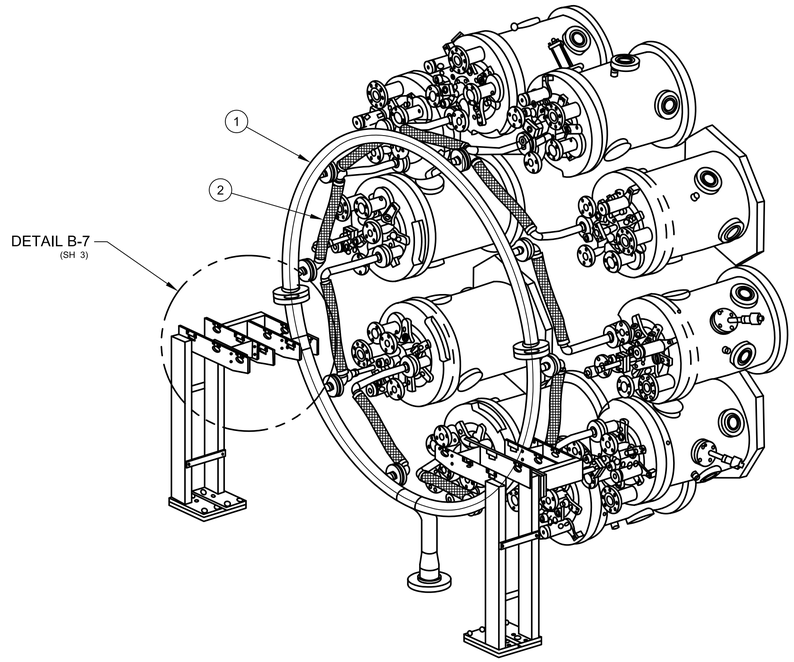

ISOMETRIC VIEW

IMPORTANTE

ESTE PLANO FUE ELABORADO EN AUTOCAD V.2008
CUALQUIER MODIFICACION REALIZADA EN CAMPO DEBERA SER NOTIFICADO A LA UNIDAD RESPONSABLE.
QUEDA PROHIBIDO CORREGIR ESTE PLANO SIN AUTORIZACION DE ESTA UNIDAD.

ALL DIMENSIONS IN BRACKETS [ ] ARE MILLIMETER; EXPRESSED DIMENSIONS ARE INCHES

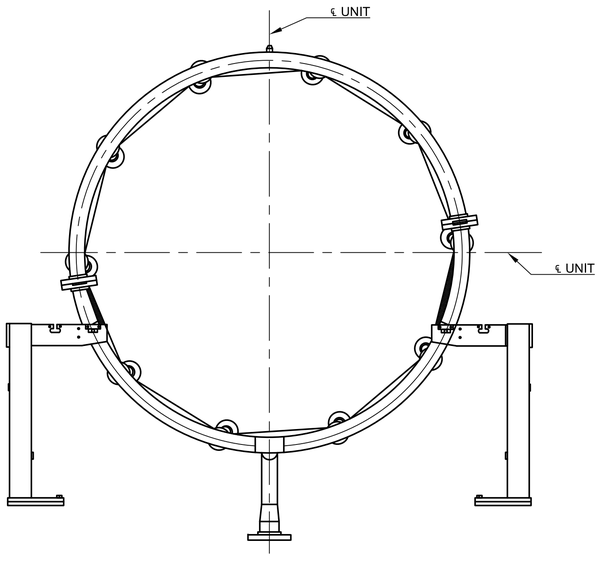

VIEW: A-6 (SH 1)

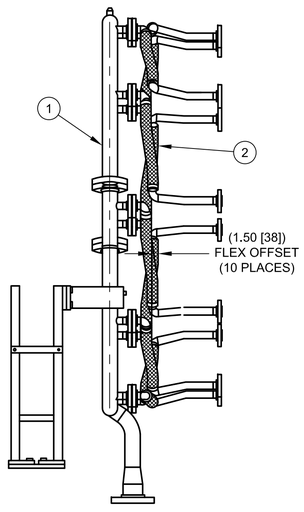

N° DE DOCUMENTO	DESCRIPCIÓN	REV.	FECHA
AGM-02-0204-PLA-M-0031	ATOMIZING AIR LOWER PIPING ARRANGEMENT (MLI 0983)		

DOCUMENTOS DE REFERENCIA

REV.	FECHA	REVISIONES O MODIFICACIONES	DIBUJO	REVISO	APROBO
0	06/06/23	ISSUED FOR REVIEW	SAB	CB	TK

REF. FABRICANTE		
REF. FABRICANTE	FABRICANTE	O/C:

DERWICK ASSOCIATES CORP. | ProEnergy SERVICES | CORPOELEC | La Electricidad de Caracas | SENECA

AMPLIACIÓN DE LA CAPACIDAD DE GENERACIÓN Y TRANSPORTE DE ELECTRICIDAD EN LA ISLA DE MARGARITA

ATOMIZING AIR – TURBINE COMPARTMENT DUAL FUEL MOD. UNITS 298034 & 298035 (MLI 065)

PLANO N°:	REV:		
PROYECTO N°: 409-2956-1			
CALCULO:	PROYECTO:	ESCALA: NONE	PLANO No: AGM-02-0204-PLA-M-0026
REVISADO: C. Brown	CALCULO:	FECHA: 06/60/11	
DIBUJO: S. Boerckel	REVISADO: J. Castillo	DISK. N°	
APROBADO: T. Koontz	DIBUJO:	ESC./PLOTEO:	
ARCHIVO:	APROBADO: M. Monticelli	ARCHIVO:	PAGINA: 2 DE: 3 — REV. 0

F_A1_11 – 841x594mm

LINEA DE CORTE DE COPIA
LINEA DE CORTE DE ORIGINAL

LINEA DE CORTE DE ORIGINAL
LINEA DE CORTE DE COPIA

N° PLANO: AGM-02-0204-PLA-M-0026 | 0

IMPORTANTE

ESTE PLANO FUE ELABORADO EN AUTOCAD V.2008
CUALQUIER MODIFICACION REALIZADA EN CAMPO
DEBERA SER NOTIFICADO A LA UNIDAD
RESPONSABLE.
QUEDA PROHIBIDO CORREGIR ESTE PLANO SIN
AUTORIZACION DE ESTA UNIDAD.

ALL DIMENSIONS IN BRACKETS [ ] ARE MILLIMETER; EXPRESSED DIMENSIONS ARE INCHES

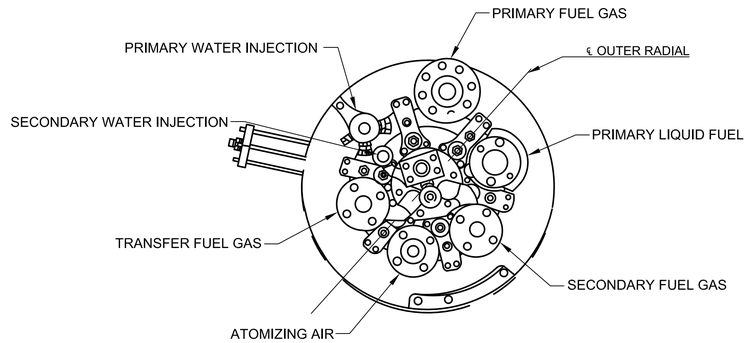

VIEW: A-5 (SH 1)

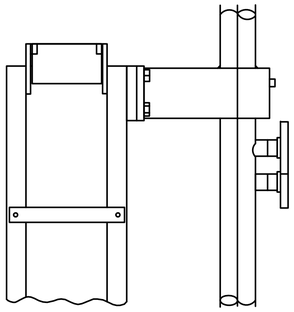

DETAIL: A-2 (SH 1)

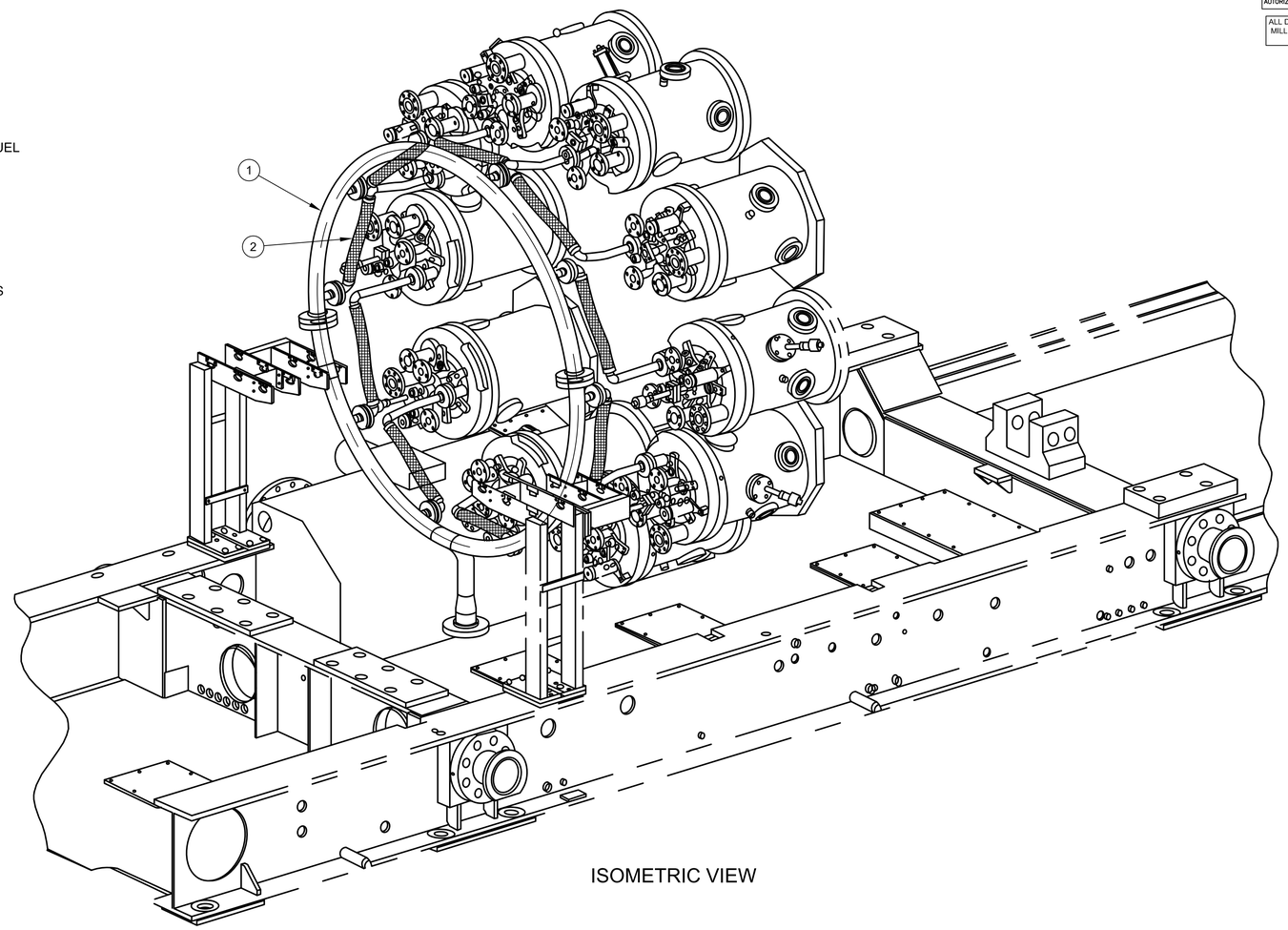

ISOMETRIC VIEW

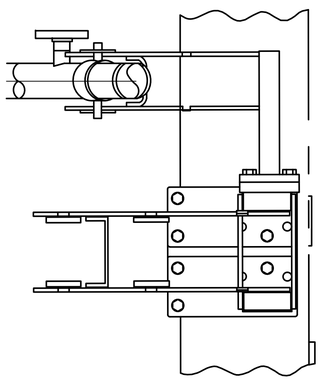

SECTION: E - 7 (SH 1)
(2 PLACES)

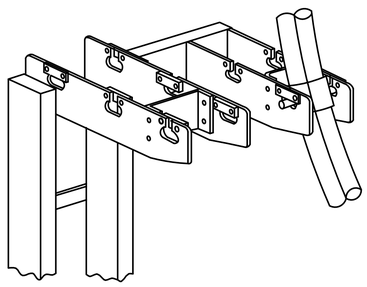

DETAIL: B-7 (SH 2)

REV.	FECHA	REVISIONES O MODIFICACIONES	DIBUJO	REVISO	APROBO
0.	06/06/23	ISSUED FOR REVIEW	SAB	CB	TK

REF. FABRICANTE		
REF. FABRICANTE	FABRICANTE	O/C:

N° DE DOCUMENTO	DESCRIPCIÓN	REV.	FECHA
AGM-02-0204-PLA-M-0031	ATOMIZING AIR LOWER PIPING ARRANGEMENT (MLI 0983)		

DOCUMENTOS DE REFERENCIA

DERWICK ASSOCIATES CORP. | ProEnergy SERVICES | CORPOELEC CORPORACIÓN ELÉCTRICA NACIONAL | La Electricidad de Caracas | GERENCIA FUNCIONAL DE INGENIERÍA Y PROYECTOS | SENECA

AMPLIACIÓN DE LA CAPACIDAD DE GENERACIÓN Y TRANSPORTE DE ELECTRICIDAD EN LA ISLA DE MARGARITA

ATOMIZING AIR – TURBINE COMPARTMENT
DUAL FUEL MOD. UNITS 298034 & 298035
(MLI 065)

PLANO N°: | REV:
PROYECTO N°: 409-2956-1

CALCULO:	PROYECTO:	ESCALA: NONE	PLANO No:
REVISADO: C. Brown	CALCULO:	FECHA: 06/60/11	AGM-02-0204-PLA-M-0026
DIBUJO: S. Boerckel	REVISADO: J. Castillo	DISK. N°	
APROBADO: T. Koontz	DIBUJO:	ESC./PLOTEO:	
ARCHIVO:	APROBADO: M. Monticelli	ARCHIVO:	PAGINA: 3 DE: 3 — REV. 0

F_A1_11 – 841x594mm

LINEA DE CORTE DE COPIA
LINEA DE CORTE DE ORIGINAL

Nº PLANO: AGM-02-0204-PLA-M-0027 0

NOTES:

1. GENERAL MACHINING APPLIED PRACTICES ARE PER 348A9200.
2. PIPING APPLIED PRACTICES ARE PER 351A3700.
3. PIPING WELDS ARE PER P8A–AG3, FILLER MATERIAL IS PER COLUMN AE–L UNLESS OTHERWISE SPECIFIED IN THIS DOCUMENT.
4. STRUCTURAL WELDS ARE PER P8A–AG1, FILLER MATERIAL IS PER COLUMN AB UNLESS OTHERWISE NOTED.
5. INSTALL AND SUPPORT TUBING PER 215A4435.
6. INSTALL TUBE UNIONS AS REQUIRED.
7. TUBE RUNS ARE ILLUSTRATIVE ONLY.
8. CLEAN AND PAINT PER ML ITEM 0108.
9. FLOW DIRECTION IS DESIGNATED WITH AN ARROW SYMBOL.
10. VCK8–1 THRU 10 CORRESPOND TO COMBUSTION CHAMBER NUMBER 1 THRU 10 RESPECTIVELY & VCK8–11 THRU 20 CORRESPOND TO COMBUSTION CHAMBER 1 THRU 10 RESPECTIVELY. CHECK VALVES ARE TO BE INSTALLED IN THE DIRECTION OF THE ARROW.
11. SYSTEM PARAMETERS AND SPECIFICATIONS ARE BASED ON TYPICAL REQUIRMENTS FOR 7EA DLN 1.0 DUAL FUEL SYSTEMS AND CUSTOMER SCOPE OF WORK.
12. THIS DRAWING IS A REPRESENTATION OF DUAL FUEL CONFIGURATION WHICH INCLUDES ORIGINAL, MODIFIED, AND NEW EQUIPMENT.

PARTS LIST			
ITEM	QTY	DESCRIPTION	VENDOR
1	1	WATER INJECTION HEADER – ASSEMBLY	Pro Energy Services
2	20	CHECK VALVE (VCK8–1 TO VCK8–20)	JASC
3	60FT [18288]	ø3/4" x 0.065" TUBING SS	
4	20	1"NPT x 3/4" TUBE FITTING	SWAGELOK
5	20	3/4" TUBE x 1"NPT TEE FITTING	SWAGELOK

ALL DIMENSIONS IN BRACKETS [ ] ARE MILLIMETER; EXPRESSED DIMENSIONS ARE INCHES.

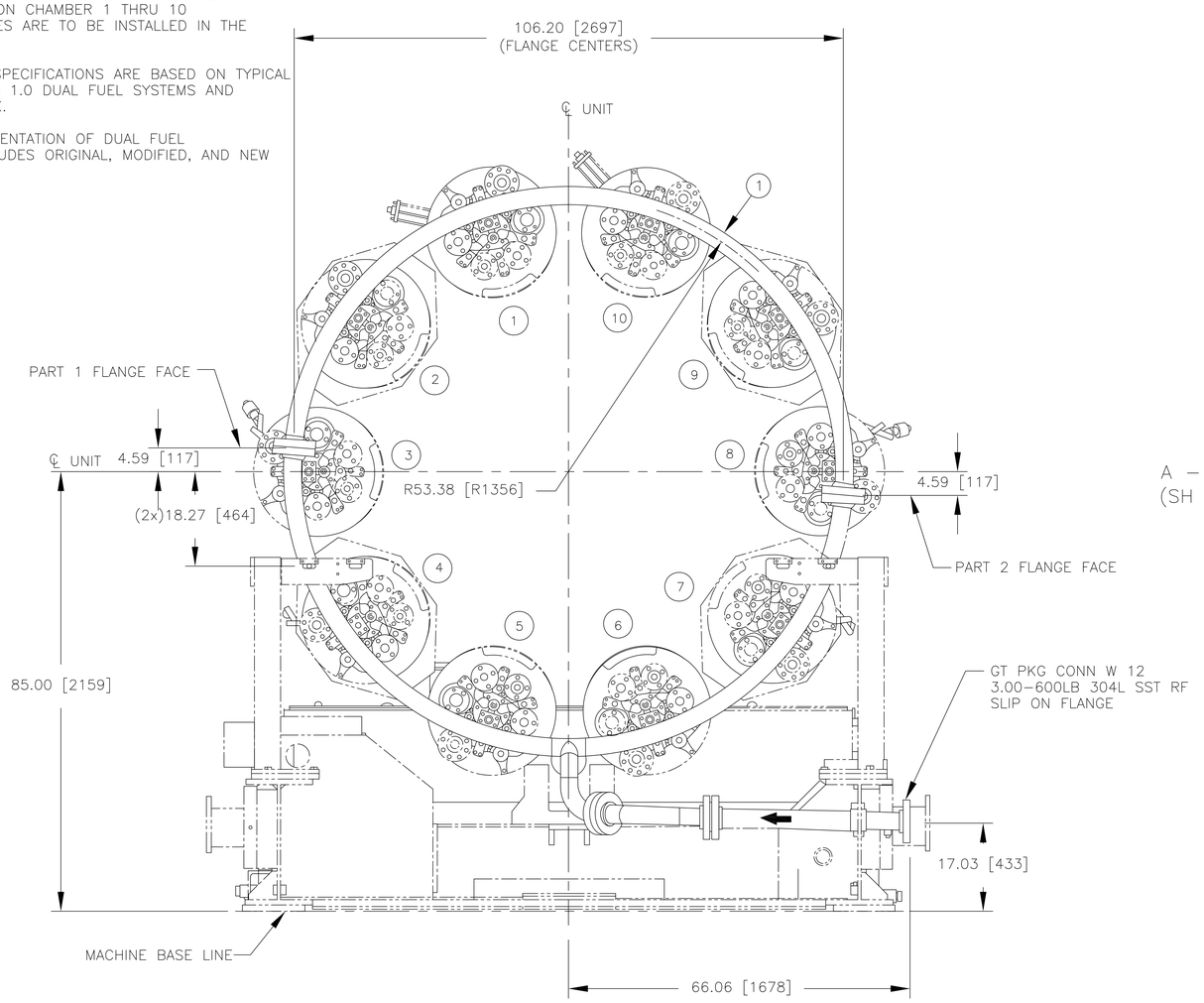

VIEW LOOKING DOWNSTREAM

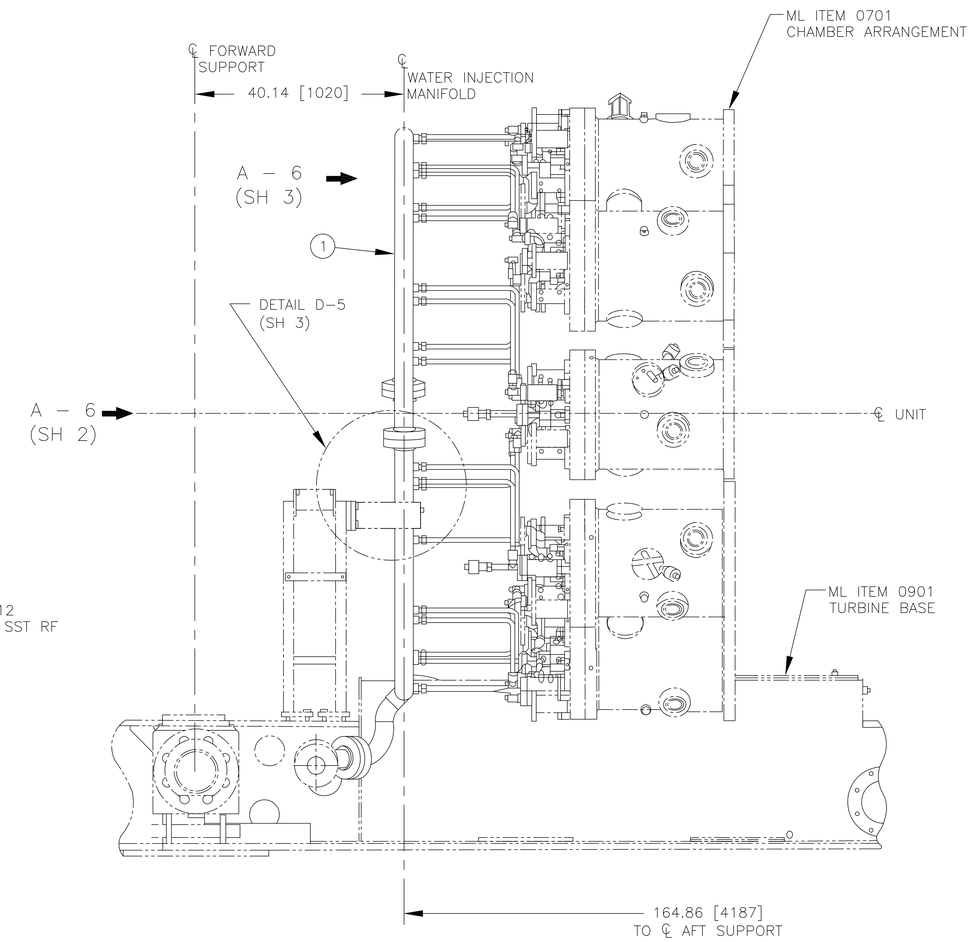

Nº DE DOCUMENTO	DESCRIPCIÓN	REV.	FECHA
AGM–02–0204–PLA–M–0020	FUEL NOZZLE PURGE		

DOCUMENTOS DE REFERENCIA

REV.	FECHA	REVISIONES O MODIFICACIONES	DIBUJO	REVISO	APROBO
0	07/04/11	ISSUED FOR FABRICATION, SEE NOTE 11	SAB	CB	TK

REF. FABRICANTE		
REF. FABRICANTE	FABRICANTE	O/C:

DERWICK · ProEnergy · CORPOELEC · Electricidad de Caracas · SENECA

AMPLIACIÓN DE LA CAPACIDAD DE GENERACIÓN Y TRANSPORTE DE ELECTRICIDAD EN LA ISLA DE MARGARITA
WATER INJECTION PIPING
DUAL FUEL MOD. UNITS 298034 & 298035
(MLI 0968)

PLANO Nº:	REV:		
PROYECTO Nº: 409–2956–1			
CALCULÓ:	PROYECTÓ:	ESCALA: 1:10	PLANO No: AGM–02–0204–PLA–M–0027
REVISADO: C. Brown	CALCULÓ:	FECHA: 07/04/11	
DIBUJO: S. Boerckel	REVISADO: J. Castillo	DISK. Nº	
APROBADO: T. Koontz	DIBUJO:	ESC./PLOTEO:	
ARCHIVO:	APROBADO: M. Montilla	ARCHIVO:	PAGINA: 1 DE: 3 REV: 0

F_A0_11 – 1189x841mm

LINEA DE CORTE DE ORIGINAL
LINEA DE CORTE DE COPIA

N° PLANO: ACM-02-0204-PLA-M-0027 0

IMPORTANTE
ESTE PLANO FUE ELABORADO EN AUTOCAD V.2008
CUALQUIER MODIFICACIÓN HECHA EN CAMPO DEBERA SER NOTIFICADO A LA UNIDAD RESPONSABLE.
QUEDA PROHIBIDO CORREGIR ESTE PLANO SIN AUTORIZACION DE ESTA UNIDAD.

ALL DIMENSIONS IN BRACKETS [ ] ARE MILLIMETER; EXPRESSED DIMENSIONS ARE INCHES

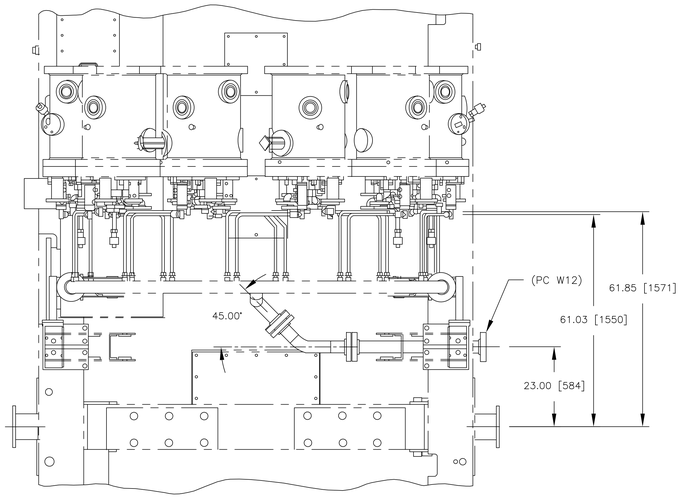

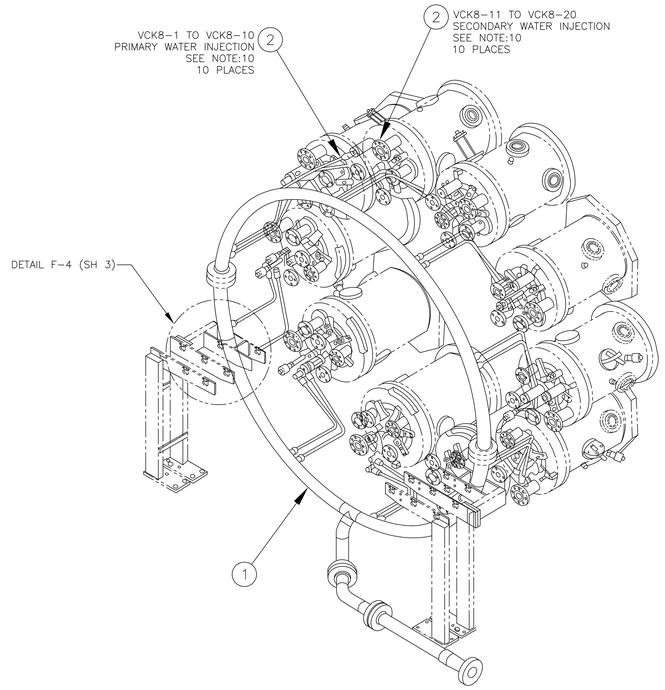

ISOMETRIC VIEW

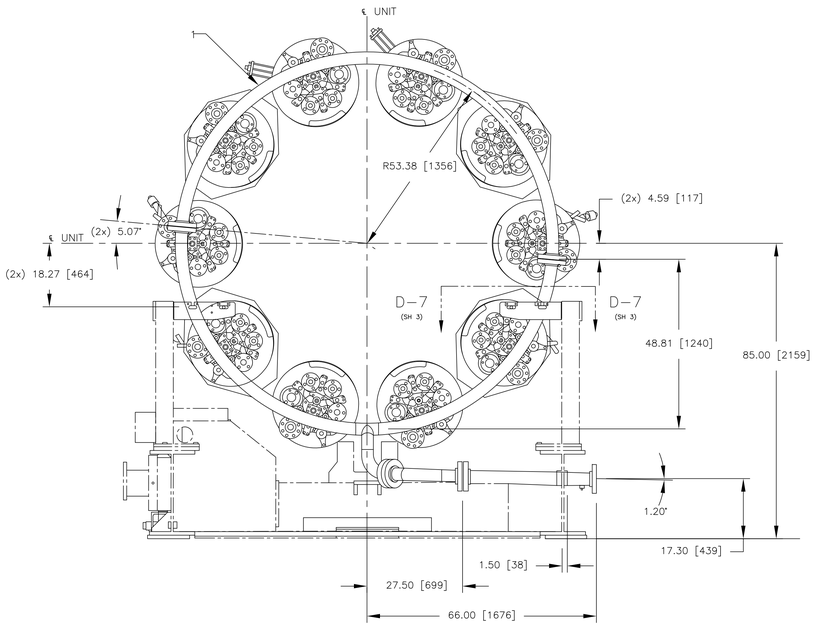

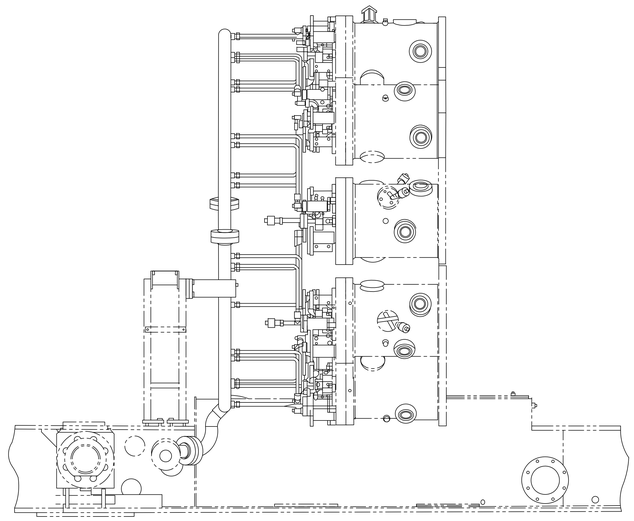

REV.	FECHA	REVISIONES O MODIFICACIONES	DIBUJO	REVISO	APROBO
0	07/04/11	ISSUED FOR FABRICATION, SEE NOTE-11, SHEET-1	SAB	CB	TK

REF. FABRICANTE		
REF. FABRICANTE	FABRICANTE	O/C:

DERWICK Venezuela Associates Corp. — ProEnergy Services, LLC — CORPOELEC Corporación Eléctrica Nacional — La Electricidad de Caracas — GERENCIA FUNCIONAL DE INGENIERIA Y PROYECTOS — SENECA

AMPLIACIÓN DE LA CAPACIDAD DE GENERACIÓN Y TRANSPORTE DE ELECTRICIDAD EN LA ISLA DE MARGARITA
WATER INJECTION PIPING
DUAL FUEL MOD. UNITS 298034 & 298035
(MLI 0968)

PLANO N°:	REV: 0		
PROYECTO N°: 409-2956-1			
CALCULO:	PROYECTO:	ESCALA: 1:15	PLANO No: ACM-02-0204-PLA-M-0027
REVISADO: C. Brown	CALCULO:	FECHA: 07/04/11	
DIBUJO: S. Boerckel	REVISADO: J. Castillo	DISK. N°	
APROBADO: T. Koontz	DIBUJO:	ESC./PLOTEO:	
ARCHIVO:	APROBADO: M. Montiel	ARCHIVO:	PAGINA: 2 DE: 3 — REV: 0

F_AG_11 – 1189x841mm

LINEA DE CORTE DE COPIA
LINEA DE CORTE DE ORIGINAL

LINEA DE CORTE DE ORIGINAL
LINEA DE CORTE DE COPIA

N° PLANO: AGM-02-0204-PLA-M-0027 0

IMPORTANTE
ESTE PLANO FUE ELABORADO EN AUTOCAD V.2008
CUALQUIER MODIFICACION REALIZADA EN CAMPO
DEBERA SER NOTIFICADO A LA UNIDAD
RESPONSABLE.
QUEDA PROHIBIDO CORREGIR ESTE PLANO SIN
AUTORIZACION DE ESTA UNIDAD.

ALL DIMENSIONS IN BRACKETS [ ]
ARE MILLIMETER; EXPRESSED
DIMENSIONS ARE INCHES

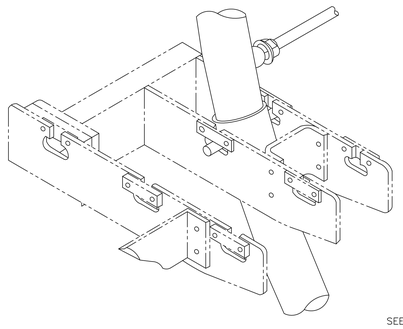

DETAIL F–4 (SH2)
(2 PLACES)

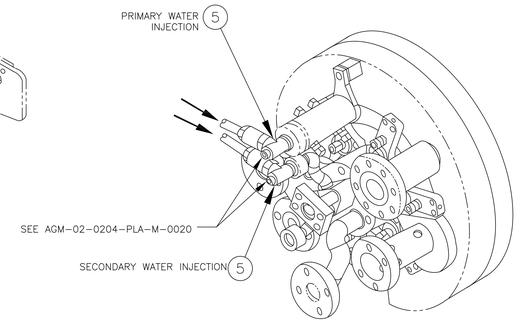

DETAIL F–2
10 PLACES

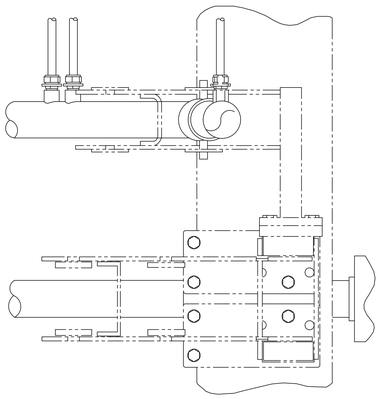

SECTION D–7 (SH 2)
2 PLACES

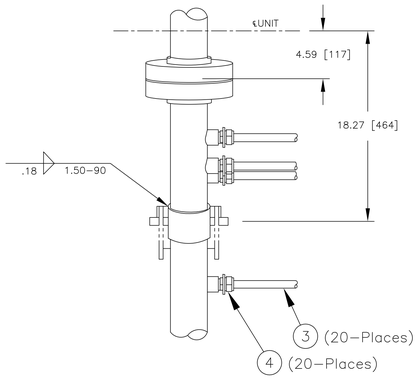

DETAIL D–5 (SH 1)
(2 PLACES)

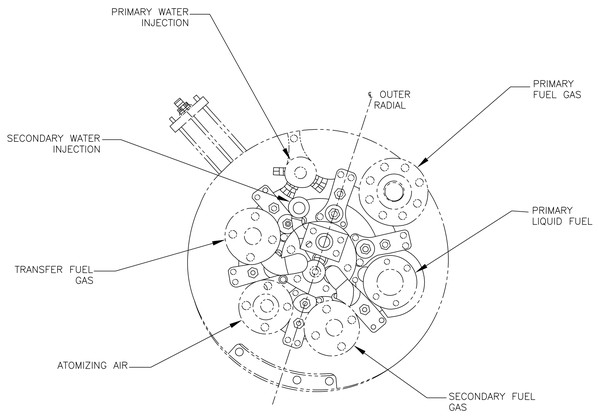

VIEW A –6 (SH 1)
ENLARGED

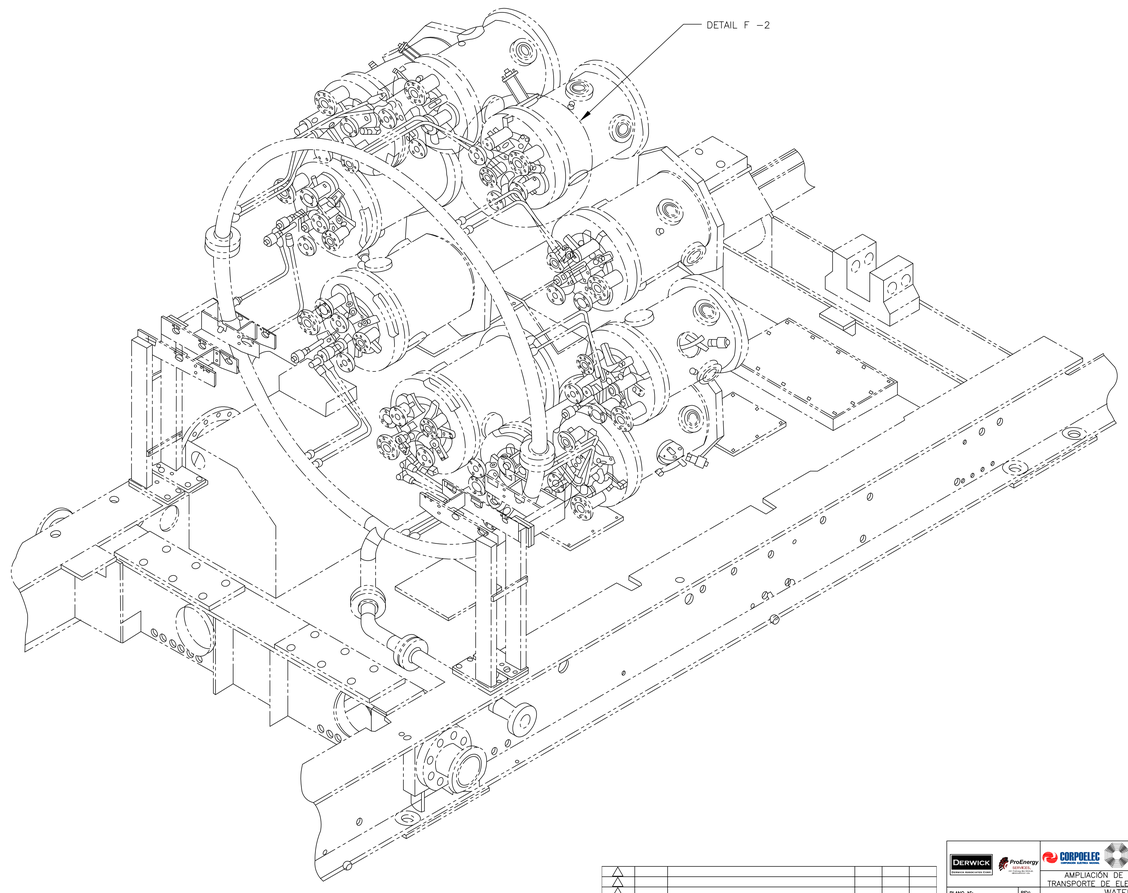

ISOMETRIC VIEW

REV.	FECHA	REVISIONES O MODIFICACIONES	DIBUJO	REVISO	APROBO
0	07/04/11	ISSUED FOR FABRICATION, SEE NOTE–11, SHEET–1	SAB	CB	TK

REF. FABRICANTE		
REF. FABRICANTE	FABRICANTE	O/C:

DERWICK — ProEnergy SERVICES — CORPOELEC — La Electricidad de Caracas — SENECA

AMPLIACIÓN DE LA CAPACIDAD DE GENERACIÓN Y TRANSPORTE DE ELECTRICIDAD EN LA ISLA DE MARGARITA
WATER INJECTION PIPING
DUAL FUEL MOD. UNITS 298034 & 298035
(MLI 0968)

PLANO N°:	REV:		
PROYECTO N°: 409–2956–1			
CALCULO:	PROYECTO:	ESCALA: 1:5	PLANO No:
REVISADO: C. Brown	CALCULO:	FECHA: 07/04/11	AGM–02–0204–PLA–M–0027
DIBUJO: S. Boerckel	REVISADO: J. Castillo	DOK. N°:	
APROBADO: T. Koontz	DIBUJO:	ESC./PLOTEO:	
ARCHIVO:	APROBADO: M. Monticelli	ARCHIVO:	PAGINA: 3 DE: 3 REV: 0

F_A0_11 = 1189x841mm

LINEA DE CORTE DE COPIA
LINEA DE CORTE DE ORIGINAL

N° PLANO: AGM-02-0204-PLA-M-0028 | 0

IMPORTANTE

ESTE PLANO FUE ELABORADO EN AUTOCAD V.2008
CUALQUIER MODIFICACION REALIZADA EN CAMPO DEBERA SER NOTIFICADO A LA UNIDAD RESPONSABLE.
QUEDA PROHIBIDO CORREGIR ESTE PLANO SIN AUTORIZACION DE ESTA UNIDAD.

ALL DIMENSIONS IN BRACKETS [ ] ARE MILLIMETER; EXPRESSED DIMENSIONS ARE INCHES

NOTES:

1. INSTALL TUBING AFTER ROUGH ALIGNMENT OF THE TURBINE GENERATOR IS COMPLETE.
2. FIELD RUN TUBING AS REQUIRED.

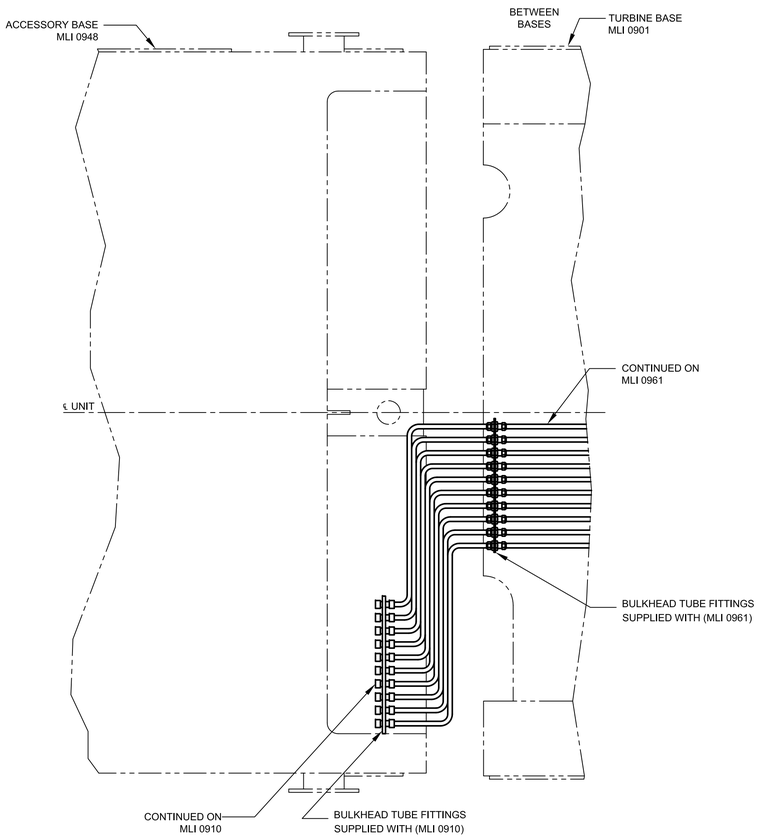

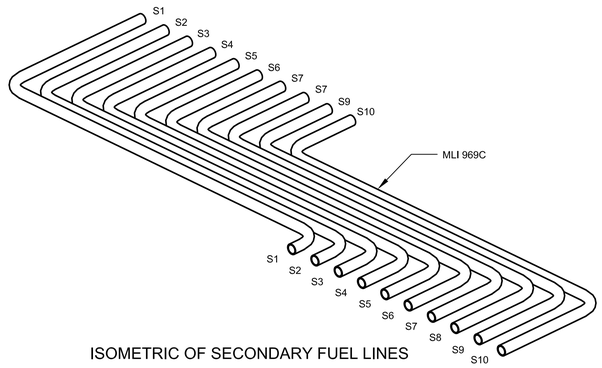

ISOMETRIC OF SECONDARY FUEL LINES

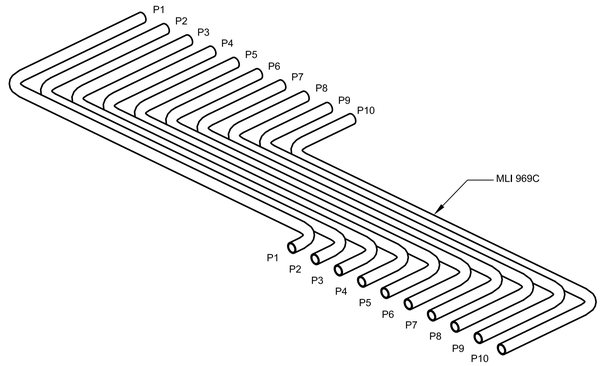

ISOMETRIC OF PRIMARY FUEL LINES

N° DE DOCUMENTO	DESCRIPCIÓN	REV.	FECHA
AGM-02-0204-PLA-M-0025	FUEL OIL – TURBINE COMPARTMENT (MLI 0961)		
AGM-02-0204-PLA-I-0015	FLOW DIVIDER (MLI 0910)		

DOCUMENTOS DE REFERENCIA

REV.	FECHA	REVISIONES O MODIFICACIONES	DIBUJO	REVISO	APROBO
0	18/07/11	ISSUED FOR CONSTRUCTION	SAB	CB	TK
A	16/02/11	ISSUED FOR REVIEW	SAB	CB	TK

REF. FABRICANTE		
REF. FABRICANTE	FABRICANTE	O/C:

DERWICK Venezuela Associates Corp. | ProEnergy SERVICES | CORPOELEC CORPORACIÓN ELÉCTRICA NACIONAL | La Electricidad de Caracas | GERENCIA FUNCIONAL DE INGENIERÍA Y PROYECTOS | SENECA

CAPACITY EXPANSION OF ELECTRICITY GENERATION AND TRANSPORT IN THE ISLAND OF MARGARITA

LIQUID FUEL TUBING INTERCONNECT DUAL FUEL MOD. UNITS 298034 & 298035 (MLI 0969C)

PLANO N°:	REV:		
PROYECTO N°: 409-2956-1			
CALCULO:	PROYECTO:	ESCALA: NONE	PLANO No: AGM-02-0204-PLA-M-0028
REVISADO: C. Brown	CALCULO:	FECHA: 18/07/11	
DIBUJO: S. Boerckel	REVISADO: J. Castillo	DISK. N°	
APROBADO: T. Koontz	DIBUJO:	ESC./PLOTEO:	
ARCHIVO:	APROBADO: M. Monticelli	ARCHIVO:	PAGINA: 1 DE: 1 — REV. 0

F_A1_11 – 841x594mm

N° PLANO: AGM-02-0204-PLA-M-0029

0

NOTES :

1. GENERAL MACHINING APPLIED PRACTICES ARE PER 348A9200
2. PIPING APPLIED PRACTICES ARE PER 351A3700.
3. PIPING WELDS ARE PER P8A-AG3, FIGURE PER. APPENDIX II, FILLER METAL COLUMN AE-L PER APPENDIX I.
4. STRUCTURAL WELDS ARE PER P8A-AG1, FIGURE PER APPENDIX III, FILLER METAL COLUMN AB PER APPENDIX II.
5. TORQUE BOLTS AND STUDS PER 248A4158.
6. CLEAN AND PAINT PER MLI 0108.
7. ALL INTERCONNECTING PIPING TO BE INSTALLED IN A STRAIN FREE CONDITION.
8. ALL DIMENSIONS ARE FOR REFERENCE ONLY, ACTUAL SITE MAY VARY.
9. SYSTEM PARAMETERS AND SPECIFICATIONS ARE BASED ON TYPICAL REQUIREMENTS FOR 7EA DLN 1.0 DUAL FUEL SYSTEMS AND CUSTOMERS SCOPE OF WORK.

IMPORTANTE

ESTE PLANO FUE ELABORADO EN AUTOCAD V.2008
CUALQUIER MODIFICACION REALIZADA EN CAMPO DEBERA SER NOTIFICADO A LA UNIDAD RESPONSABLE.
QUEDA PROHIBIDO CORREGIR ESTE PLANO SIN AUTORIZACION DE ESTA UNIDAD.

ALL DIMENSIONS IN BRACKETS [ ] ARE MILLIMETER; EXPRESSED DIMENSIONS ARE INCHES

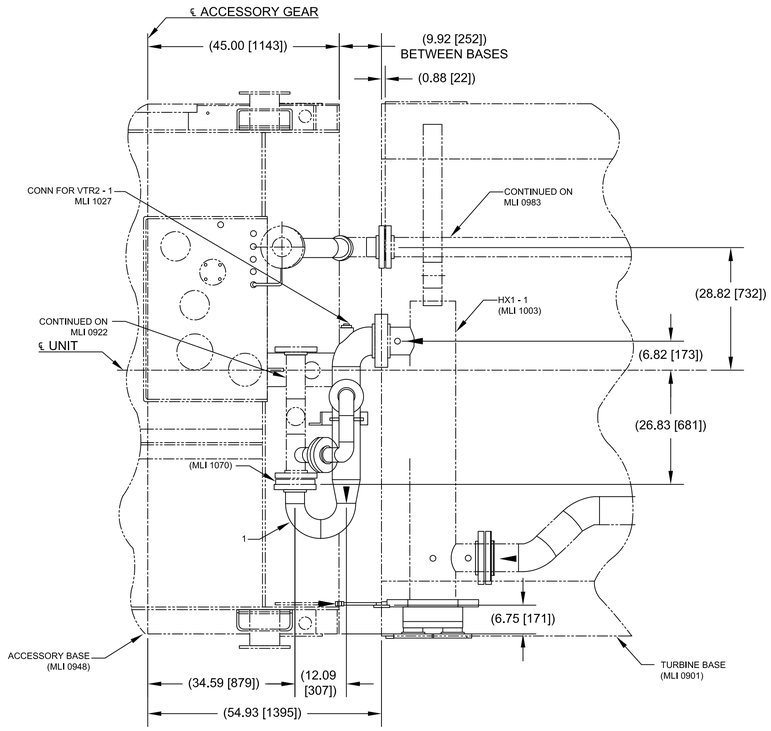

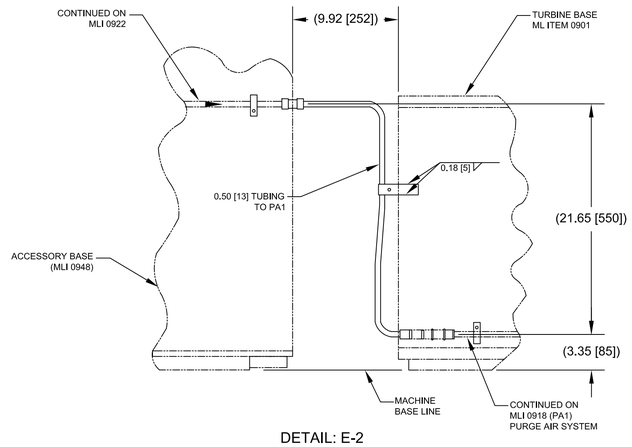

DETAIL: E-2
PIPING LEFT OFF FOR CLARITY

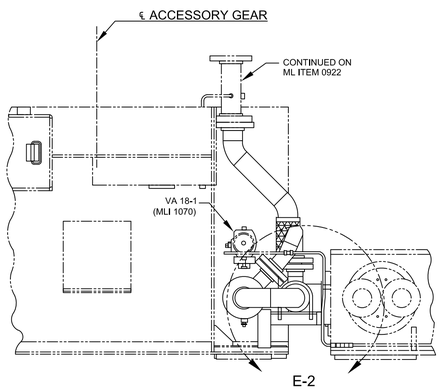

E-2

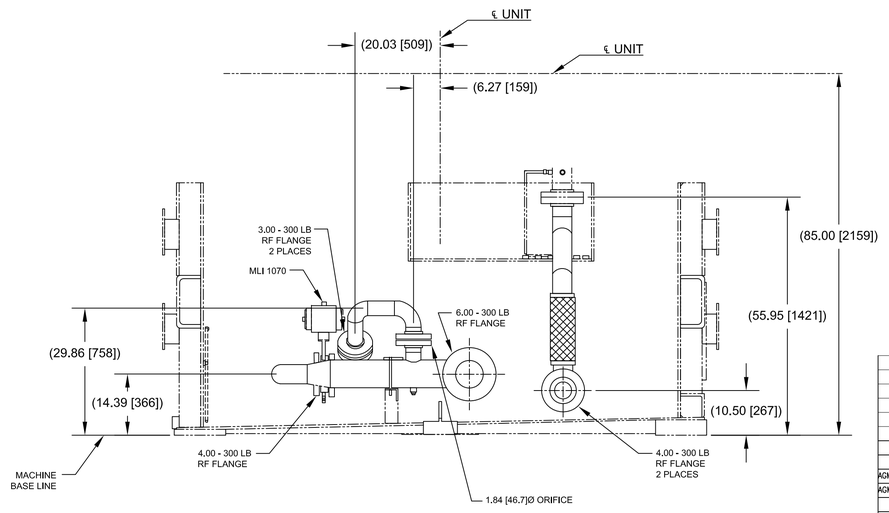

N° DE DOCUMENTO	DESCRIPCIÓN	REV.	FECHA
AGM-02-0204-PLA-M-0031	ATOMIZING AIR LOWER PIPING ARRANGEMENT (MLI 0983)		
AGM-02-0204-PLA-I-0019	FUEL NOZZLE PURGE PANEL ASSEMBLY (MLI 0918)		

DOCUMENTOS DE REFERENCIA

REV.	FECHA	REVISIONES O MODIFICACIONES	DIBUJO	REVISO	APROBO
0	06/06/11	ISSUED FOR REVIEW	SAB	CB	TK

REF. FABRICANTE		
REF. FABRICANTE	FABRICANTE	O/C:

DERWICK Derwick Associates Corp. | ProEnergy SERVICES | CORPOELEC Corporación Eléctrica Nacional | La Electricidad de Caracas | Gerencia Funcional de Ingeniería y Proyectos | SENECA

AMPLIACIÓN DE LA CAPACIDAD DE GENERACIÓN Y TRANSPORTE DE ELECTRICIDAD EN LA ISLA DE MARGARITA

ATOMIZING AIR INTERCONNECT
DUAL FUEL MOD. UNITS 298034 & 298035
(MLI 0969D)

PLANO N°:	REV:		
PROYECTO N°: 409-2956-1			
CALCULO:	PROYECTO:	ESCALA: NONE	PLANO No: AGM-02-0204-PLA-M-0029
REVISADO: C. Brown	CALCULO:	FECHA: 06/06/11	
DIBUJO: S. Boerckel	REVISADO: J. Castillo	DISK. N°	
APROBADO: T. Koontz	DIBUJO:	ESC./PLOTEO:	
ARCHIVO:	APROBADO: M. Monticelli	ARCHIVO:	PAGINA: 1 DE: 1 REV. 0

F_A1_11 – 841x594mm

LINEA DE CORTE DE ORIGINAL
LINEA DE CORTE DE COPIA

N° PLANO: AGM-02-0204-PLA-M-0031 | 0

NOTES :

1. GENERAL MACHINING APPLIED PRACTICES ARE PER 348A9200.
2. PIPING APPLIED PRACTICES ARE PER 351A3700.
3. PIPING WELDS ARE PER P8A-AG3, FIGURE PER APPENDIX IXII, FILLER METAL COLUMN AE-L PER APPENDIX I. ASSEMBLY WELDS ARE DESIGNATED WITH A SYMBOL "X", IF APPLICABLE.
4. STRUCTURAL WELDS ARE PER P8A-AG1, FIGURE PER APPENDIX III. FILLER METAL COLUMN AB PER APPENDIX II.
5. INSTALL AND SUPPORT TUBING PER 215A4435.
6. CLEAN AND PAINT PER MLI 0108.
7. INSTALL TUBE UNIONS AS REQUIRED.
8. TUBE RUNS ARE ILLUSTRATIVE ONLY.
9. FLOW DIRECTIONS IS DESIGNATED WITH AN ARROW SYMBOL.
10. VALVE ORIENTATIONS ARE SUGGESTED AND MAY BE ROTATED TO AVOID INTERFERENCES.
11. MAXIMUM SUPPORT DISTANCE FOR TURBINE:
    0.375 [9.5]OD - 18.00 [457]
    0.50 [12.7]OD - 22.00 [559]
    0.75 [19.1]OD - 24.00 [610]
    1.00 [25.4]OD - 30.00 [762]
12. CUT PIPE SUPPORTS TO SUIT LENGTH AND USE 0.12 [3] FILLET WELD ALL AROUND.
13. FLEX HOSE TO BE INSTALLED IN A STRAIN FREE CONDITION.
14. RETAIN SHIPPING COVERS AND PLUGS AS SUPPLIED WITH ATOMIZING AIR HEAT EXCHANGER.
15. SYSTEM PARAMETERS AND SPECIFICATIONS ARE BASED ON TYPICAL REQUIRMENTS FOR 7EA DLN 1.0 DUAL FUEL SYSTEMS AND CUSTOMER SCOPE OF WORK.
16. THIS DRAWING IS A REPRESENTATION OF DUAL FUEL CONFIGURATION WHICH INCLUDES ORIGINAL, MODIFIED, AND NEW EQUIPMENT.

I M P O R T A N T E

ESTE PLANO FUE ELABORADO EN AUTOCAD V.2008 CUALQUIER MODIFICACION REALIZADA EN CAMPO DEBERA SER NOTIFICADO A LA UNIDAD RESPONSABLE.
QUEDA PROHIBIDO CORREGIR ESTE PLANO SIN AUTORIZACION DE ESTA UNIDAD.

ALL DIMENSIONS IN BRACKETS [ ] ARE MILLIMETER, EXPRESSED DIMENSIONS ARE INCHES

PARTS LIST				
ITEM	QTY	DEVICE No	DESCRIPTION	VENDOR/MODEL
1	1	N/A	FLEX HOSE	MICROFLEX / AA-14
2	1	N/A	FLEX HOSE	MICROFLEX / AA-27
3	1	N/A	FLEX HOSE	MICROFLEX / AA-11
4	1	N/A	FLEX HOSE	MICROFLEX / AA-31
5	3	N/A	1" BALL VALVE	SWAGELOK / SS-65TF16
6	1	N/A	6" BFW (BUTTERFLY VALVE)	FLOWSERVE / 6-BX2-L381TR9N9NFR
7	1	VR64-6	RELIEF VALVE	KUNKLE / 912BFEM01-JE
8	1	HX1-1	AA HEAT EXCHANGER	ITT STANDARD / 10064-C300-2P
9	1	N/A	1/2" BALL VALVE	SWAGELOK / SS-65TF8

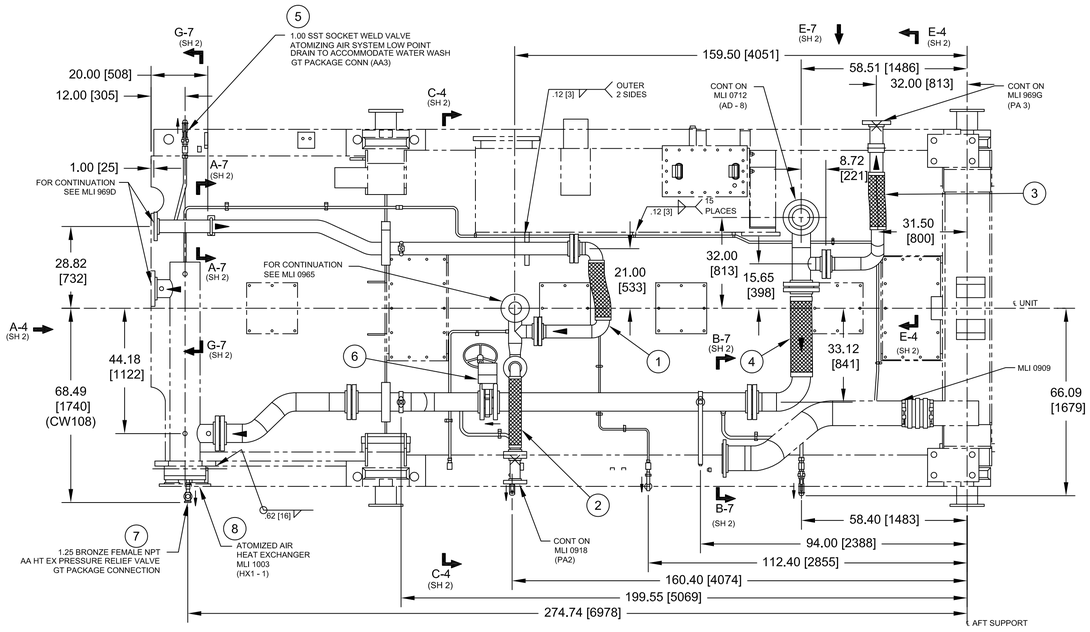

SEE SHT 3 FOR ISOMETRIC VIEW

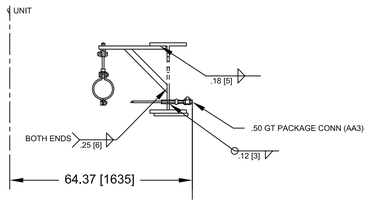

SECTION C - 8

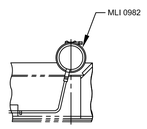

SECTION B-8

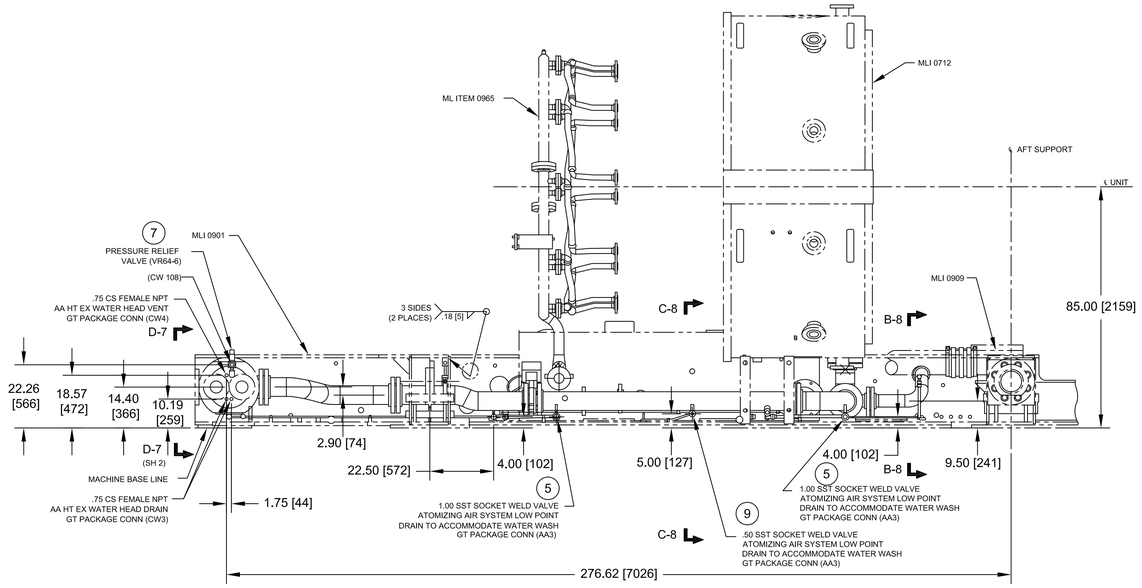

0	19/07/11	ISSUED FOR REVIEW	SAB	CB	TK
REV.	FECHA	REVISIONES O MODIFICACIONES	DIBUJO	REVISO	APROBO

REF. FABRICANTE		
REF. FABRICANTE	FABRICANTE	O/C:

AGM-02-0204-PLA-M-0029	ATOMIZING AIR INTERCONNECT		
AGM-02-0204-PLA-M-0026	ATOMIZING AIR – TURBINE COMPARTMENT		
AGM-02-0204-PLA-M-0020	FUEL NOZZLE PURGE		
AGM-02-0204-ESP-0061	INTERCONNECTION POINTS		
N° DE DOCUMENTO	DESCRIPCIÓN	REV.	FECHA

DOCUMENTOS DE REFERENCIA

DERWICK | ProEnergy SERVICES | CORPOELEC | La Electricidad de Caracas | GERENCIA FUNCIONAL DE INGENIERIA Y PROYECTOS | SENECA

AMPLIACIÓN DE LA CAPACIDAD DE GENERACIÓN Y TRANSPORTE DE ELECTRICIDAD EN LA ISLA DE MARGARITA

ATOMIZING AIR LOWER PIPING ARRANGEMENT
DUAL FUEL MOD. UNITS 298034 & 298035
(MLI 0983)

PLANO N°:	REV:		
PROYECTO N°: 409-2956-1			
CALCULO:	PROYECTO:	ESCALA: 1:25	PLANO No:
REVISADO: C. Brown	CALCULO:	FECHA: 19/07/11	AGM-02-0204-PLA-M-0031
DIBUJO: S. Boerckel	REVISADO: J. Castillo	DISK. N°	
APROBADO: T. Koontz	DIBUJO:	ESC./PLOTEO:	
ARCHIVO:	APROBADO: M. Monticelli	ARCHIVO:	PAGINA: 1 DE: 3 REV. 0

F_A1_11 – 841x594mm

LINEA DE CORTE DE COPIA
LINEA DE CORTE DE ORIGINAL

LINEA DE CORTE DE ORIGINAL
LINEA DE CORTE DE COPIA

N° PLANO: AGM-02-0204-PLA-M-0031 | 0

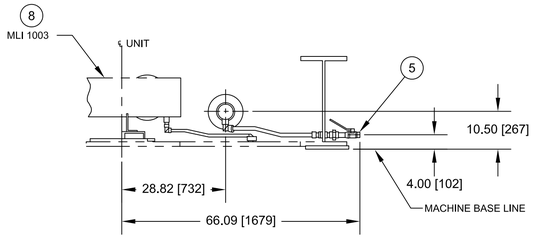

SECTION: G-7 (SH 1)
(ROTATED 90° CW)

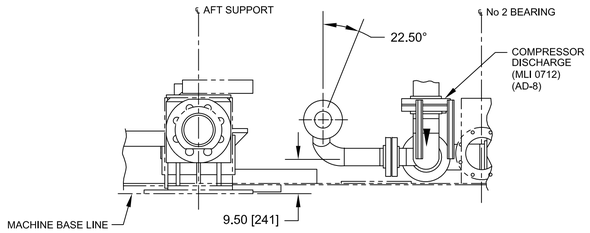

VIEW: E-7 (SH 1)
(ROTATED 180°)

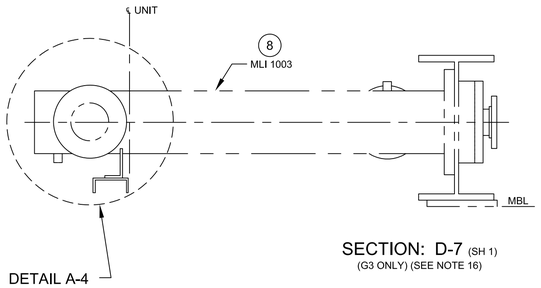

SECTION: D-7 (SH 1)
(G3 ONLY) (SEE NOTE 16)

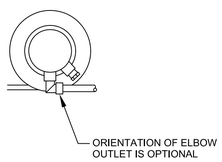

SECTION: B-7 (SH 1)
(ROTATED 90° CW) (ENLARGED)

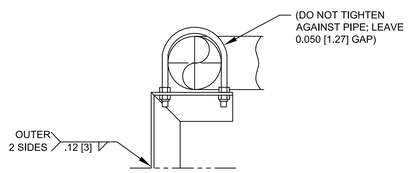

SECTION: A-7 (SH 1)
(ROTATED 90° CW)
(ENLARGED)

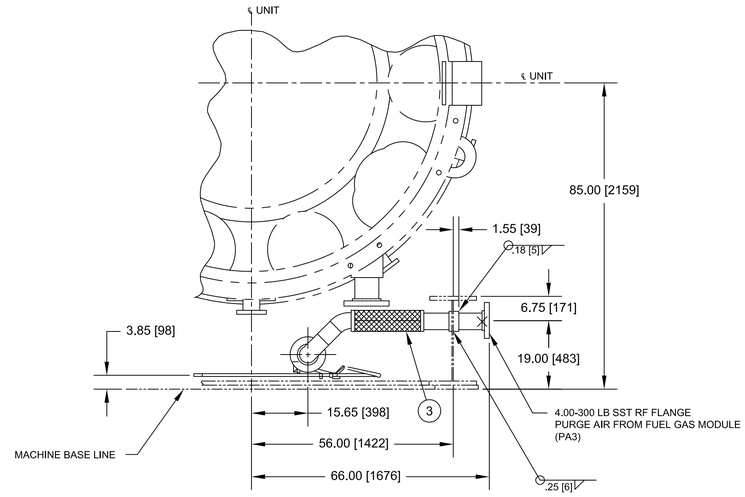

SECTION: E-4 (SH1)
(ROTATED 90° CW)

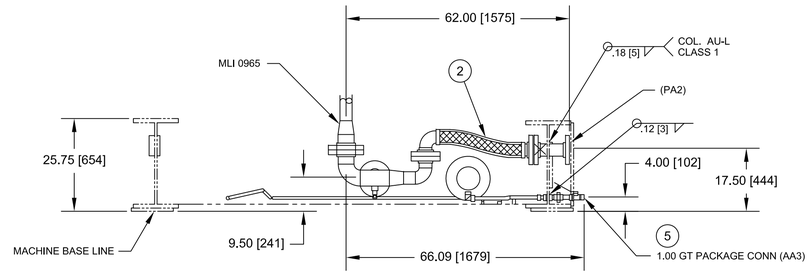

SECTION: C-4 (SH 1)
(WITH TURBINE WATER WASH)
(ROTATED 90° CCW)

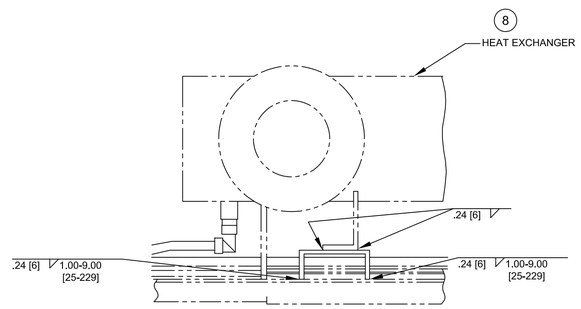

VIEW: A-4 (SH 1)
(ROTATED 90° CCW)
(ENLARGED)

DETAIL: A-4
(G3 ONLY)
(ROTATED 90° CCW)
(ENLARGED)

IMPORTANTE

ESTE PLANO FUE ELABORADO EN AUTOCAD V.2008 CUALQUIER MODIFICACION REALIZADA EN CAMPO DEBERA SER NOTIFICADO A LA UNIDAD RESPONSABLE.
QUEDA PROHIBIDO CORREGIR ESTE PLANO SIN AUTORIZACION DE ESTA UNIDAD.

ALL DIMENSIONS IN BRACKETS [ ] ARE MILLIMETER; EXPRESSED DIMENSIONS ARE INCHES

N° DE DOCUMENTO	DESCRIPCIÓN	REV.	FECHA
AGM-02-0204-PLA-M-0029	ATOMIZING AIR INTERCONNECT		
AGM-02-0204-PLA-M-0026	ATOMIZING AIR – TURBINE COMPARTMENT		
AGM-02-0204-PLA-M-0020	FUEL NOZZLE PURGE		
AGM-02-0204-ESP-0061	INTERCONNECTION POINTS		

DOCUMENTOS DE REFERENCIA

REV.	FECHA	REVISIONES O MODIFICACIONES	DIBUJO	REVISO	APROBO
0	19/07/11	ISSUED FOR REVIEW	SAB	CB	TK

REF. FABRICANTE		
REF. FABRICANTE	FABRICANTE	O/C:

DERWICK ASSOCIATES CORP. | ProEnergy SERVICES | CORPOELEC | La Electricidad de Caracas | GERENCIA FUNCIONAL DE INGENIERIA Y PROYECTOS | SENECA

AMPLIACIÓN DE LA CAPACIDAD DE GENERACIÓN Y TRANSPORTE DE ELECTRICIDAD EN LA ISLA DE MARGARITA

ATOMIZING AIR LOWER PIPING ARRANGEMENT
DUAL FUEL MOD. UNITS 298034 & 298035
(MLI 0983)

PLANO N°:	REV:		
PROYECTO N°:			
CALCULO:	PROYECTO:	ESCALA: 1:20	PLANO No: AGM-02-0204-PLA-M-0031
REVISADO:	CALCULO:	FECHA: 19/07/11	
DIBUJO: S. Boerckel	REVISADO: J. Castillo	DISK. N°	
APROBADO:	DIBUJO:	ESC./PLOTEO:	
ARCHIVO:	APROBADO: M. Monticelli	ARCHIVO:	PAGINA: 2 DE: 3 — REV. 0

F_A1_11 – 841x594mm

LINEA DE CORTE DE COPIA
LINEA DE CORTE DE ORIGINAL

LINEA DE CORTE DE ORIGINAL
LINEA DE CORTE DE COPIA

N° PLANO: AGM-02-0204-PLA-M-0031 | 0

IMPORTANTE

ESTE PLANO FUE ELABORADO EN AUTOCAD V.2008
CUALQUIER MODIFICACION REALIZADA EN CAMPO DEBERA SER NOTIFICADO A LA UNIDAD RESPONSABLE.
QUEDA PROHIBIDO CORREGIR ESTE PLANO SIN AUTORIZACION DE ESTA UNIDAD.

ALL DIMENSIONS IN BRACKETS [ ] ARE MILLIMETER; EXPRESSED DIMENSIONS ARE INCHES

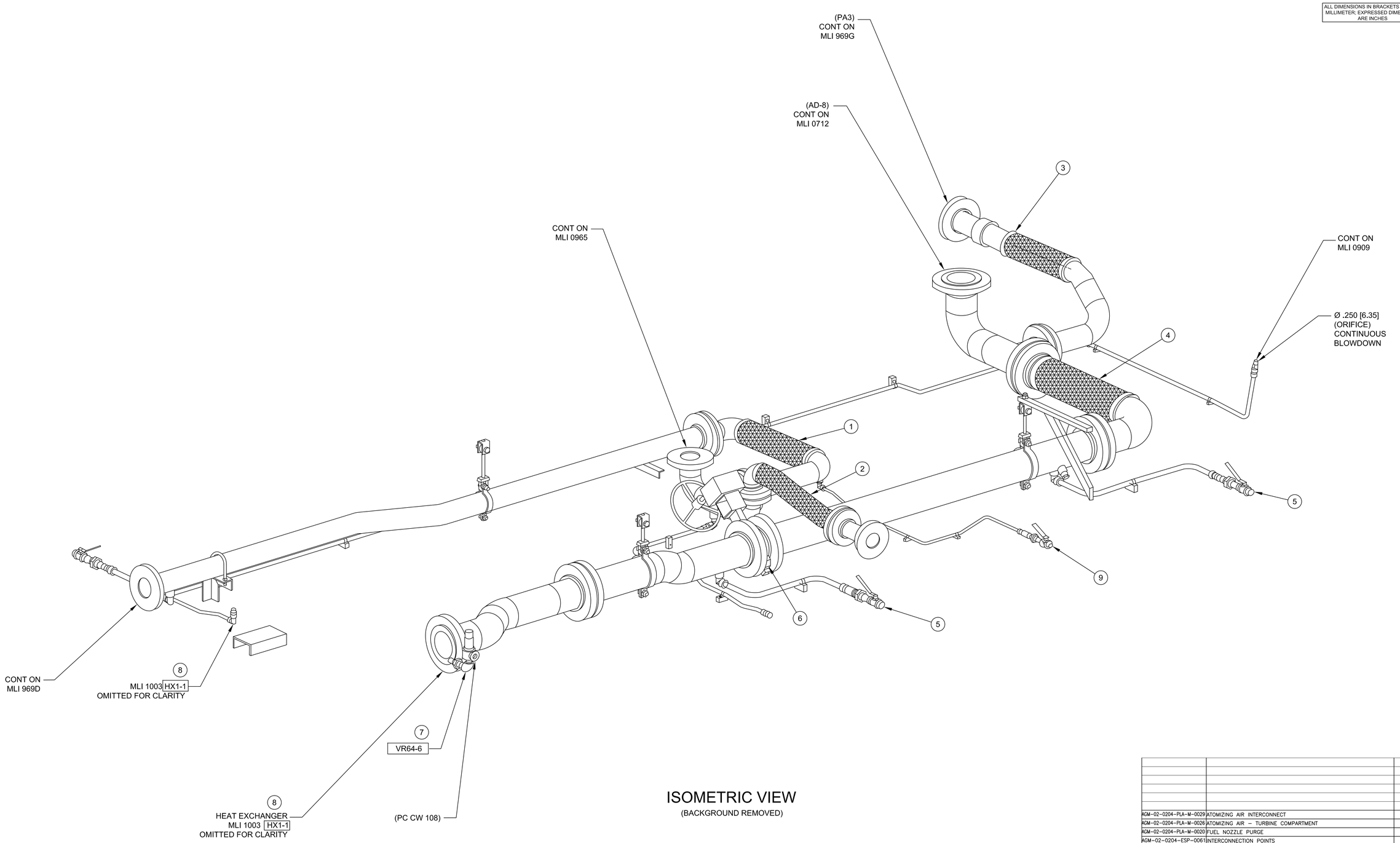

ISOMETRIC VIEW

(BACKGROUND REMOVED)

N° DE DOCUMENTO	DESCRIPCIÓN	REV.	FECHA
AGM-02-0204-PLA-M-0029	ATOMIZING AIR INTERCONNECT		
AGM-02-0204-PLA-M-0026	ATOMIZING AIR – TURBINE COMPARTMENT		
AGM-02-0204-PLA-M-0020	FUEL NOZZLE PURGE		
AGM-02-0204-ESP-0061	INTERCONNECTION POINTS		

DOCUMENTOS DE REFERENCIA

REV.	FECHA	REVISIONES O MODIFICACIONES	DIBUJO	REVISO	APROBO
0	19/07/11	ISSUED FOR REVIEW	SAB	CB	TK

REF. FABRICANTE		
REF. FABRICANTE	FABRICANTE	O/C:

DERWICK ASSOCIATES CORP. · ProEnergy SERVICES · CORPOELEC · La Electricidad de Caracas · GERENCIA FUNCIONAL DE INGENIERÍA Y PROYECTOS · SENECA

AMPLIACIÓN DE LA CAPACIDAD DE GENERACIÓN Y TRANSPORTE DE ELECTRICIDAD EN LA ISLA DE MARGARITA

ATOMIZING AIR LOWER PIPING ARRANGEMENT
DUAL FUEL MOD. UNITS 298034 & 298035
(MLI 0983)

PLANO N°:	REV:		
PROYECTO N°:			
CALCULO:	PROYECTO:	ESCALA: NONE	PLANO No: AGM-02-0204-PLA-M-0031
REVISADO:	CALCULO:	FECHA: 19/07/11	
DIBUJO: S. Boerckel	REVISADO: J. Castillo	DISK. N°	
APROBADO:	DIBUJO:	ESC./PLOTEO:	
ARCHIVO:	APROBADO: M. Monticelli	ARCHIVO:	PAGINA: 3 DE: 3 — REV. 0

F_A1_11 – 841x594mm

LINEA DE CORTE DE COPIA
LINEA DE CORTE DE ORIGINAL

LINEA DE CORTE DE ORIGINAL
LINEA DE CORTE DE COPIA

N°. PLANO: AGM-02-0204-PLA-M-0033 | 0

I M P O R T A N T E

ESTE PLANO FUE ELABORADO EN AUTOCAD V.2008
CUALQUIER MODIFICACION REALIZADA EN CAMPO DEBERA SER NOTIFICADO A LA UNIDAD RESPONSABLE.
QUEDA PROHIBIDO CORREGIR ESTE PLANO SIN AUTORIZACION DE ESTA UNIDAD.

ALL DIMENSIONS IN BRACKETS [ ] ARE MILLIMETER; EXPRESSED DIMENSIONS ARE INCHES

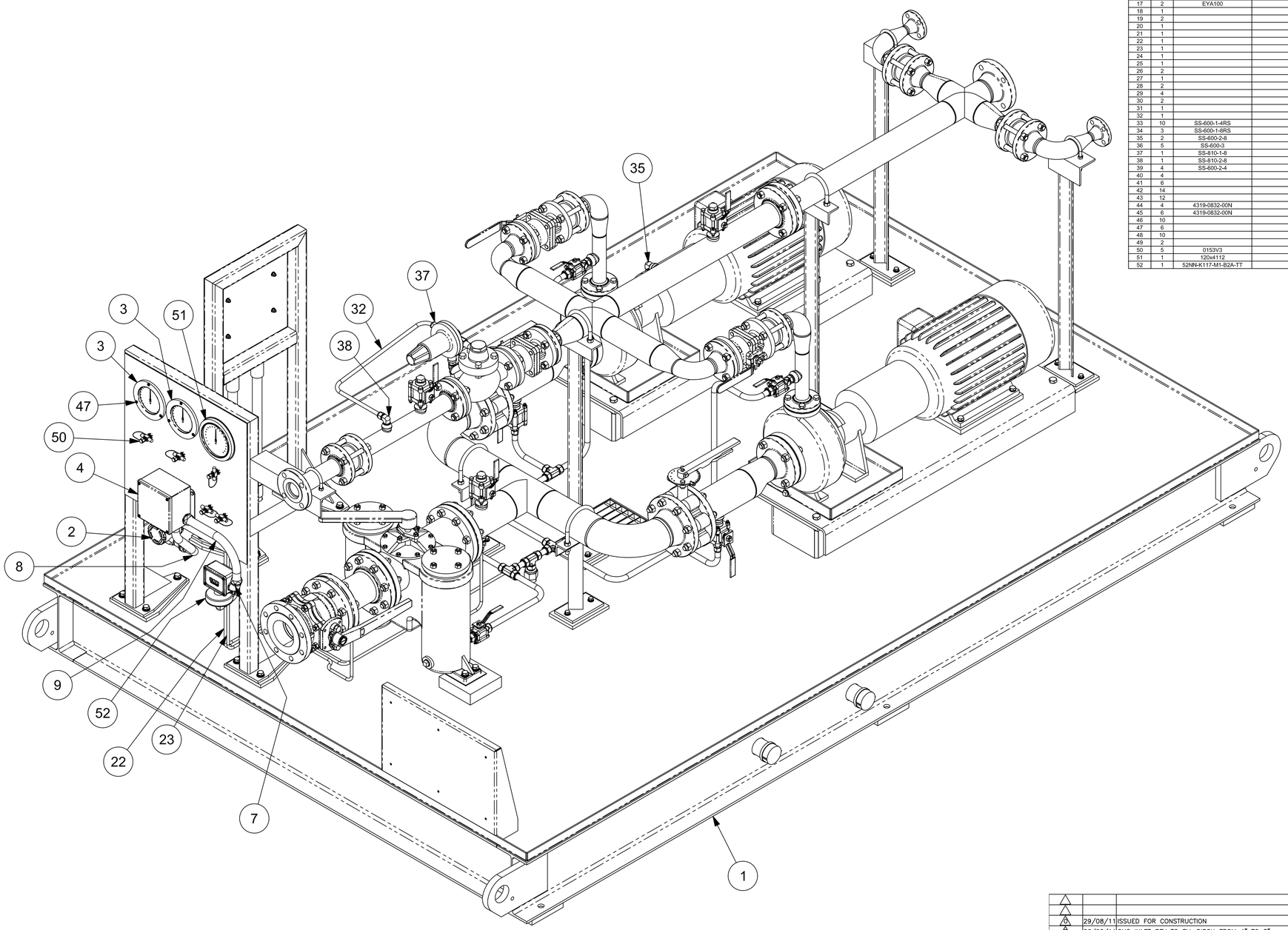

Parts List

ITEM	QTY	PART NUMBER	DETAIL	DESCRIPTION	MATERIAL	Thickness	Width	Length
1	1	409-2956-LFF7EA-700	409-2956-LFF7EA-0700	MECHANICAL	ASSEMBLY			
2	1	3051TG2A2A21AB4C6		3051 PRESSURE TRANSMITTER	ROSEMOUNT PRESSURE TRANSMITTER			
3	2	7112		4-1/2" PANEL MOUNT GRADE-2A	DWYER SERIES 7000 PRESSURE GUAGE			
4	1			J-BOX	6x6x4 STAINLESS JUNCTION BOX			
5	1			J-BOX	8x8x4 STAINLESS JUNCTION BOX			
6	3			3/4" LIQUID TIGHT STARIGHT CONNECTOR	LIQUID TIGHT STRAIGHT CONNECTOR			
7	1			3/4" LIQUID TIGHT 90Deg ELBOW	LIQUID TIGHT ELBOW			
8	1			LIQUID TIGHT	3/4" LIQUID TIGHT			12.09 in
9	1			LIQUID TIGHT	3/4" LIQUID TIGHT			13.78 in
10	2			MOTOR LIQUID TIGHT	1" LIQUID TIGHT			22.53 in
11	2			1" LIQUID TIGHT STRAIGHT CONNECTOR	LIQUID TIGHT STRAIGHT CONNECTOR			
12	2	5354SST		1" LIQUID TIGHT 90Deg ELBOW	LIQUID TIGHT ELBOW			
13	2			MOTOR CONDUIT	1 GALV RIDGED CONDUIT			5.88 in
14	2			MOTOR CONDUIT	1 GALV RIDGED CONDUIT			20.00 in
15	4			CONDUIT COUPLING	1 - CONDUIT COUPLING			
16	2			1" STRAIGHT HUB CONNECTOR	STRAIGHT HUB CONNECTOR			
17	2	EYA100		1" EYA SEALING FITTING	1" NPT EYA SEALING FITTING			
18	1			3/4F x 1/2M REDUCING SOCKET	NPT MALE & FEMALE REDUCING SOCKET			
19	2			1/4" Hex Head Plug	NPT HEX PLUG			
20	1			1/2" Hex Head Plug	NPT HEX PLUG			
21	1			PT TUBING	3/8" OD TUBE - SS			156.55 In
22	1			PRESSURE DIFF TUBE	3/8" OD TUBE - SS			75.04 in
23	1			PRESSURE DIFF TUBE	3/8" OD TUBE - SS			56.26 in
24	1			PT TUBE	3/8" OD TUBE - SS			6.98 in
25	1			PRESSURE DIFF TUBE	3/8" OD TUBE - SS			6.98 in
26	2			LOWE PRESSURE GAUGE TUBE	3/8" OD TUBE - SS			14.24 in
27	1			LOW PRESSURE GAUGE TUBE	3/8"OD TUBE - SS			21.84 in
28	2			LOW PRESSURE GAUGE TUBE	3/8" OD TUBE - SS			2.82 in
29	4			PRESSURE DIFF TUBE	3/8" OD TUBE - SS			1.75 in
30	2			PRESSURE DIFF TUBE	3/8" OD TUBE - SS			10.84 in
31	1			PRESSURE SWITCH LOW TUBE	3/8" OD TUBE - SS			25.47 in
32	1			BACK PRESSURE TUBE	1/2"OD TUBE - SS			28.91 in
33	10	SS-600-1-4RS		3/8TUBE x 1/4MNPT STRAIGHT FITTING	SWAGELOK STRAIGHT MNPT FITTING			
34	3	SS-600-1-8RS		3/8TUBE x 1/2MNPT FITTING	SWAGELOK STRAIGHT FITTING			
35	2	SS-600-2-8		3/8"OD x 1/2"NPT 90Deg ELBOW	SWAGELOK MALE 90Deg ELBOW NPT			
36	5	SS-600-3		3/8" TEE - TUBE	SAWGELOK 3/8" TEE - TUBE			
37	1	SS-810-1-8		1/2"OD x 1/2"MNPT FITTING	SWAGELOK STRAIGHT FITTING STAINLESS			
38	1	SS-810-2-8		1/2"OD x 1/2"NPT ELBOW	SWAGELOK 90DEG ELBOW STAINLESS			
39	4	SS-600-2-4		3/8"OD x 1/4" NPT ELBOW	SWAGELOK MALE 90Deg ELBOW			
40	4			Type A Plain Washer	#6 - TYPE-A PLAIN FLAT WASHER - CAD			
41	6			Type A Plain Washer	#10 - TYPE-A PLAIN FLAT WASHER - CAD			
42	14			Type A Plain Washer	1/4" - TYPE-A PLAIN FLAT WASHER - CAD			
43	12			HELICAL SPRING LOCK WASHER	1/4" - HELICOID SPRING LOCK WASHER - CAD			
44	4	4319-0832-00N		8-32 HEX KEPS NUT	KEPS HEX NUT			
45	6	4319-0832-00N		10-24 HEX KEPS NUT	KEPS HEX NUT			
46	10			HEX NUT	1/4-20 - HEX NUT CAD PLATED - GRADE-5			
47	6			10-24 x 1 in PHILLIPS PAN HEAD SCREW	10-24 UNC - Steel, High Strength Low Alloy			1.00 in
48	10			1/4-20 x 3/4 in LONG HHCS	HEX BOLT CAD PLATED - GRADE-5			0.75 in
49	2			1/4-20 x 1 In LONG HHCS	HEX BOLT CAD PLATED - GRADE-5			1.00 in
50	5	0153V3		1/4"FNPT GAGE VALVE w/STEM TEST CONN	DRAGON GAGE VALVE w/ STEM TEST			
51	1	120x4112		4-1/2" MODEL-120 FILTER MINDER GAUGE	MID-WEST INSTRUMENT FILTER MINDER GAUGE			
52	1	52NN-K117-M1-B2A-TT		PRESSURE & VACUUM SWITCH (40-0-40 IN WC)	SOR PRESSURE & VACUUM SWITCH			

N° DE DOCUMENTO	DESCRIPCIÓN	REV.	FECHA
AGM-02-0204-PLA-P-0048	LIQUID FUEL SYSTEM P&ID		
AGM-02-0204-PLA-M-0034	LIQUID FUEL FORWARDING SKID – GENERAL ARRANGEMENT		

DOCUMENTOS DE REFERENCIA

REV.	FECHA	REVISIONES O MODIFICACIONES	DIBUJO	REVISO	APROBO
0	29/08/11	ISSUED FOR CONSTRUCTION	SAB	CB	TK
B	26/02/11	CHG INLET BFV TO BV; DISCH FROM 4" TO 3"	SAB	CB	TK
A	15/02/11	ISSUED FOR REVIEW	SAB	CB	TK

REF. FABRICANTE		
REF. FABRICANTE	FABRICANTE	O/C:

DERWICK ASSOCIATES CORP. | ProEnergy SERVICES | CORPOELEC | La Electricidad de Caracas | GERENCIA FUNCIONAL DE INGENIERIA Y PROYECTOS | SENECA

AMPLIACIÓN DE LA CAPACIDAD DE GENERACIÓN Y TRANSPORTE DE ELECTRICIDAD EN LA ISLA DE MARGARITA

LIQUID FUEL FORWARDING SKID
DUAL FUEL MOD. UNITS 298034 & 298035
(ASSEMBLY)

PLANO N°:	REV:		
PROYECTO N°: 409-2956-1			
CALCULO:	PROYECTO:	ESCALA: NONE	PLANO No:
REVISADO: C. Brown	CALCULO:	FECHA: 29/08/11	AGM-02-0204-PLA-M-0033
DIBUJO: S. Boerckel	REVISADO: J. Castillo	DISK. N°	
APROBADO: T.Koontz	DIBUJO:	ESC./PLOTEO:	
ARCHIVO:	APROBADO: M. Monticelli	ARCHIVO:	PAGINA: 1 DE: 3 — REV. 0

F_A1_11 – 841x594mm

LINEA DE CORTE DE COPIA
LINEA DE CORTE DE ORIGINAL

LINEA DE CORTE DE ORIGINAL
LINEA DE CORTE DE COPIA

N°. PLANO: AGM-02-0204-PLA-M-0033 | 0

I M P O R T A N T E

ESTE PLANO FUE ELABORADO EN AUTOCAD V.2008
CUALQUIER MODIFICACION REALIZADA EN CAMPO
DEBERA SER NOTIFICADO A LA UNIDAD
RESPONSABLE.
QUEDA PROHIBIDO CORREGIR ESTE PLANO SIN
AUTORIZACION DE ESTA UNIDAD.

ALL DIMENSIONS IN BRACKETS [ ] ARE MILLIMETER, EXPRESSED DIMENSIONS ARE INCHES

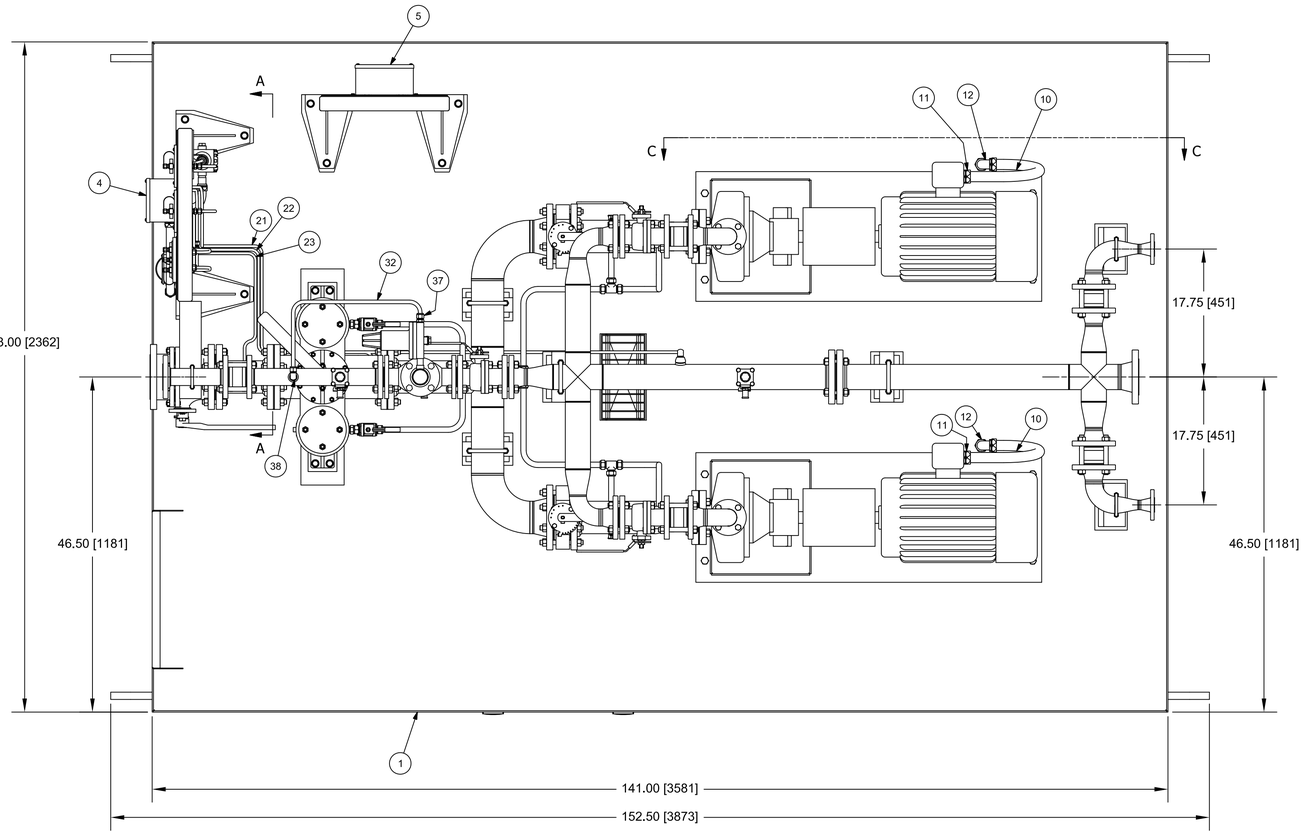

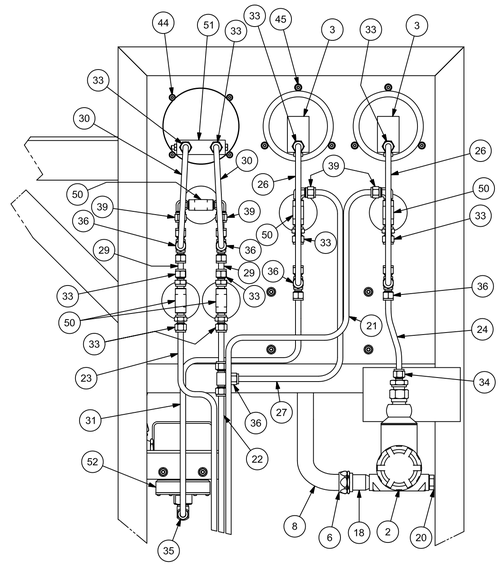

DETAIL A
SCALE 1:5

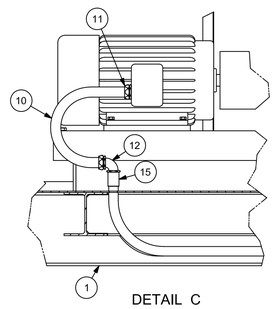

DETAIL C

REV.	FECHA	REVISIONES O MODIFICACIONES	DIBUJO	REVISO	APROBO
0	29/08/11	ISSUED FOR FABRICATION	SAB	CB	TK
B	26/02/11	CHG INLET BFV TO BV; DISCH FROM 4" TO 3"	SAB	CB	TK
A	15/02/11	ISSUED FOR REVIEW	SAB	CB	TK

REF. FABRICANTE		
REF. FABRICANTE	FABRICANTE	O/C:

N° DE DOCUMENTO	DESCRIPCIÓN	REV.	FECHA
AGM-02-0204-PLA-P-0048	LIQUID FUEL SYSTEM P&ID		
AGM-02-0204-PLA-M-0034	LIQUID FUEL FORWARDING SKID – GENERAL ARRANGEMENT		

DOCUMENTOS DE REFERENCIA

DERWICK Derwick Associates Corp. | ProEnergy SERVICES | CORPOELEC CORPORACIÓN ELÉCTRICA NACIONAL | La Electricidad de Caracas | GERENCIA FUNCIONAL DE INGENIERÍA Y PROYECTOS SENECA

AMPLIACIÓN DE LA CAPACIDAD DE GENERACIÓN Y TRANSPORTE DE ELECTRICIDAD EN LA ISLA DE MARGARITA

LIQUID FUEL FORWARDING SKID
DUAL FUEL MOD. UNITS 298034 & 298035
(ASSEMBLY)

PLANO N°: 409-2956-LFF7EA-0000	REV: 2		
PROYECTO N°: 409-2956-1			
CALCULO:	PROYECTO:	ESCALA: 1:10	PLANO No:
REVISADO: C. Brown	CALCULO:	FECHA: 29/08/11	AGM-02-0204-PLA-M-0033
DIBUJO: S. Boerckel	REVISADO: J. Castillo	DISK. N°	
APROBADO: T.Koontz	DIBUJO:	ESC./PLOTEO:	
ARCHIVO:	APROBADO: M. Monticelli	ARCHIVO:	PAGINA: 2 DE: 3 — REV. 0

F_A1_11 – 841x594mm

LINEA DE CORTE DE COPIA
LINEA DE CORTE DE ORIGINAL

LINEA DE CORTE DE ORIGINAL
LINEA DE CORTE DE COPIA

N° PLANO: AGM-02-0204-PLA-M-0033

0

IMPORTANTE

ESTE PLANO FUE ELABORADO EN AUTOCAD V.2008
CUALQUIER MODIFICACION REALIZADA EN CAMPO
DEBERA SER NOTIFICADO A LA UNIDAD
RESPONSABLE.
QUEDA PROHIBIDO CORREGIR ESTE PLANO SIN
AUTORIZACION DE ESTA UNIDAD.

ALL DIMENSIONS IN BRACKETS [ ] ARE MILLIMETER, EXPRESSED DIMENSIONS ARE INCHES

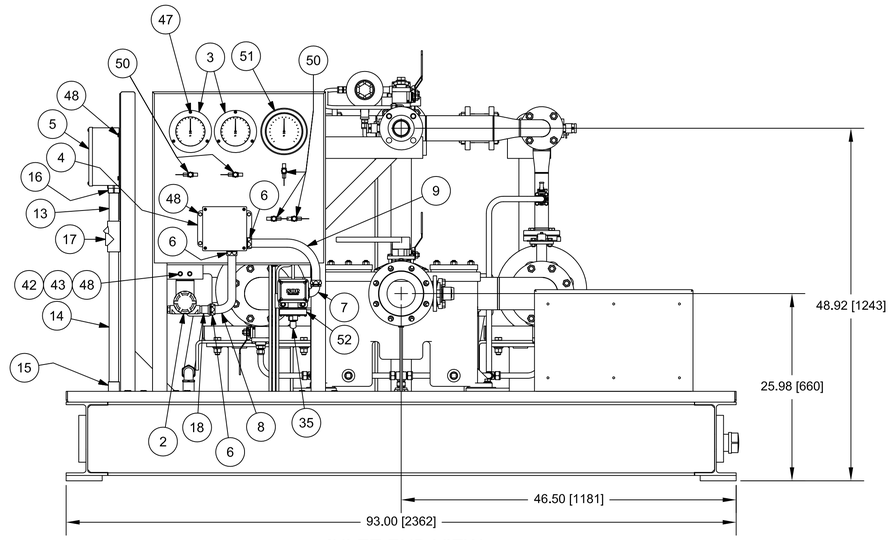

INLET END VIEW

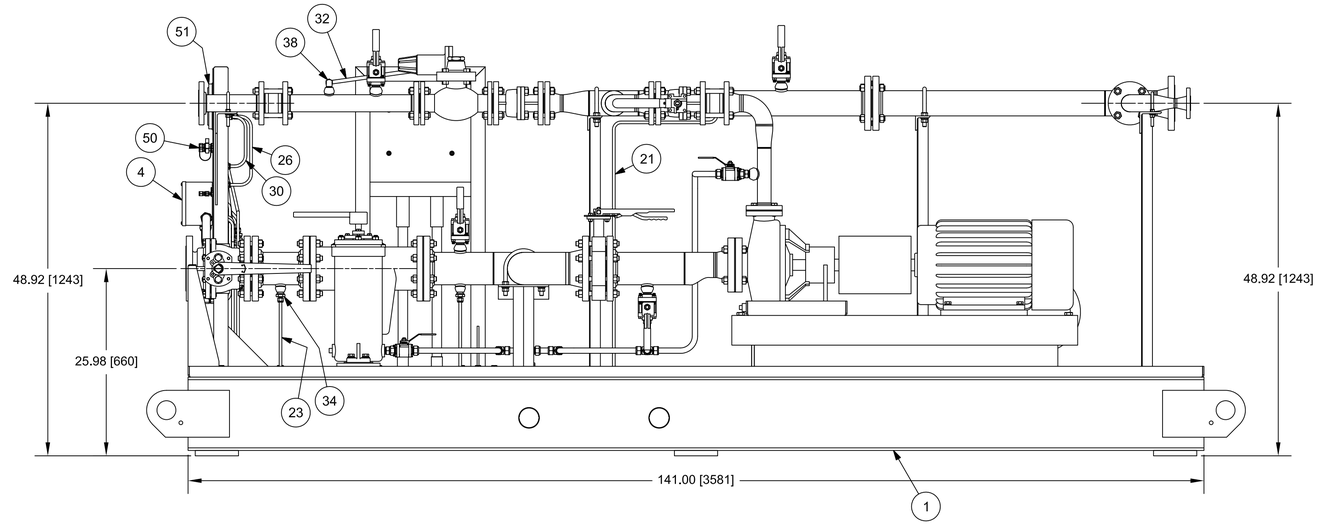

FRONT VIEW

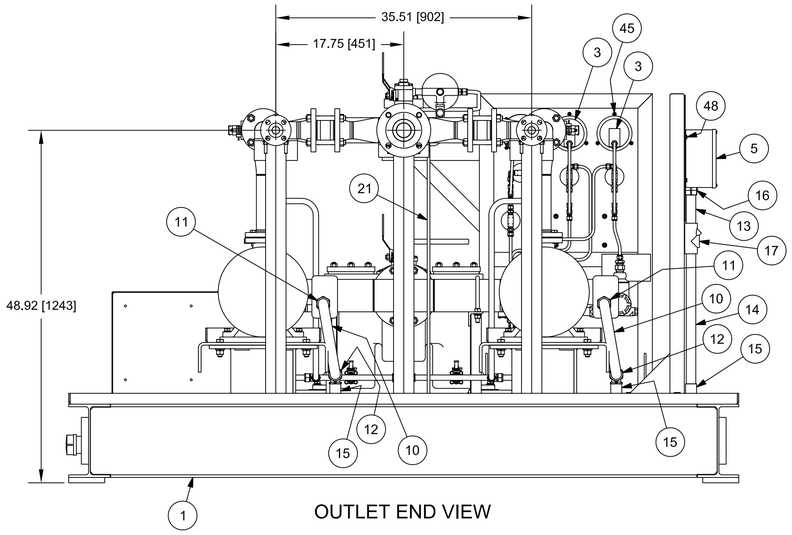

OUTLET END VIEW

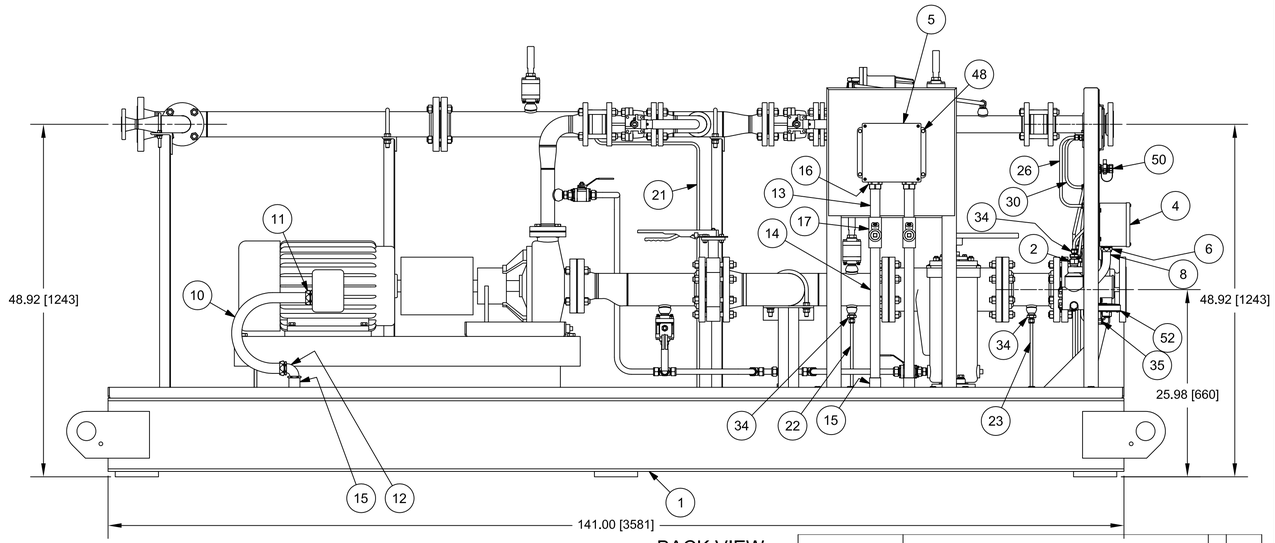

BACK VIEW

N° DE DOCUMENTO	DESCRIPCIÓN	REV.	FECHA
AGM-02-0204-PLA-P-0048	LIQUID FUEL SYSTEM P&ID		
AGM-02-0204-PLA-M-0034	LIQUID FUEL FORWARDING SKID – GENERAL ARRANGEMENT		

DOCUMENTOS DE REFERENCIA

REV.	FECHA	REVISIONES O MODIFICACIONES	DIBUJO	REVISO	APROBO
0	29/08/11	ISSUED FOR CONSTRUCTION	SAB	CB	TK
B	26/02/11	CHG INLET BFV TO BV; DISCH FROM 4" TO 3"	SAB	CB	TK
A	15/02/11	ISSUED FOR REVIEW	SAB	CB	TK

REF. FABRICANTE		
REF. FABRICANTE	FABRICANTE	O/C:

DERWICK ENGINEERING ASSOCIATES CORP. · ProEnergy SERVICES · CORPOELEC CORPORACIÓN ELÉCTRICA NACIONAL · La Electricidad de Caracas · GERENCIA FUNCIONAL DE INGENIERÍA Y PROYECTOS · SENECA

AMPLIACIÓN DE LA CAPACIDAD DE GENERACIÓN Y TRANSPORTE DE ELECTRICIDAD EN LA ISLA DE MARGARITA

LIQUID FUEL FORWARDING SKID
DUAL FUEL MOD. UNITS 298034 & 298035
(ASSEMBLY)

PLANO N°: 409-2956-LFF7EA-0000	REV: 2		
PROYECTO N°: 409-2956-1			
CALCULO:	PROYECTO:	ESCALA: 1:10	PLANO No: AGM-02-0204-PLA-M-0033
REVISADO: C. Brown	CALCULO:	FECHA: 29/08/11	
DIBUJO: S. Boerckel	REVISADO: J. Castillo	DISK. N°	
APROBADO: T.Koontz	DIBUJO:	ESC./PLOTEO:	
ARCHIVO:	APROBADO: M. Monticelli	ARCHIVO:	PAGINA: 3 DE: 3 · REV. 0

F_A1_11 – 841x594mm

LINEA DE CORTE DE COPIA
LINEA DE CORTE DE ORIGINAL

N° PLANO: AGM-02-0204-PLA-M-0034 | 0

IMPORTANTE
ESTE PLANO FUE ELABORADO EN AUTOCAD V.2008
CUALQUIER MODIFICACION REALIZADA EN CAMPO DEBERA SER NOTIFICADO A LA UNIDAD RESPONSABLE.
QUEDA PROHIBIDO CORREGIR ESTE PLANO SIN AUTORIZACION DE ESTA UNIDAD.

ALL DIMENSIONS IN BRACKETS [ ] ARE MILLIMETER; EXPRESSED DIMENSION ARE INCHES

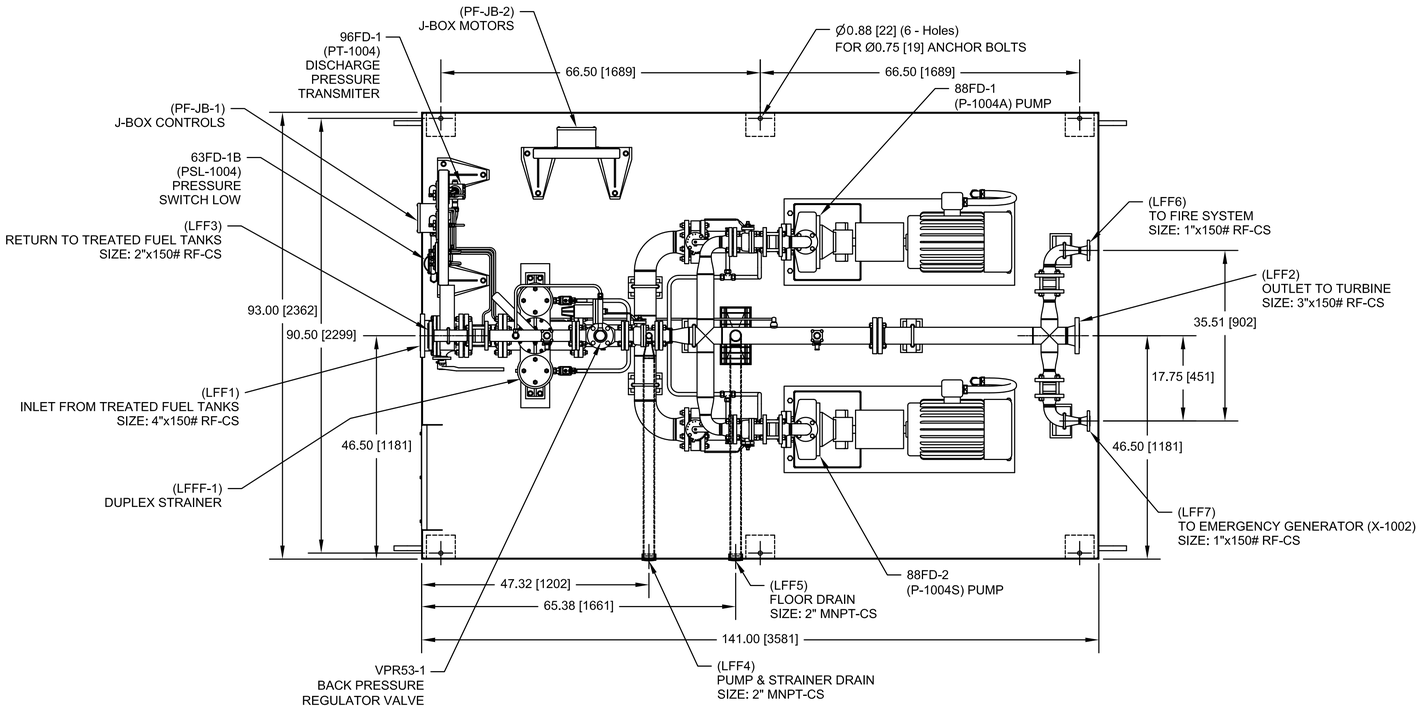

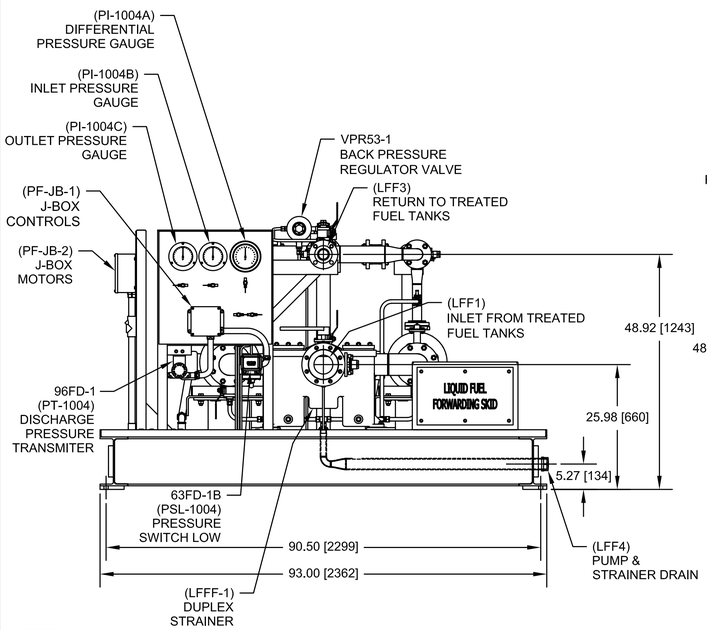

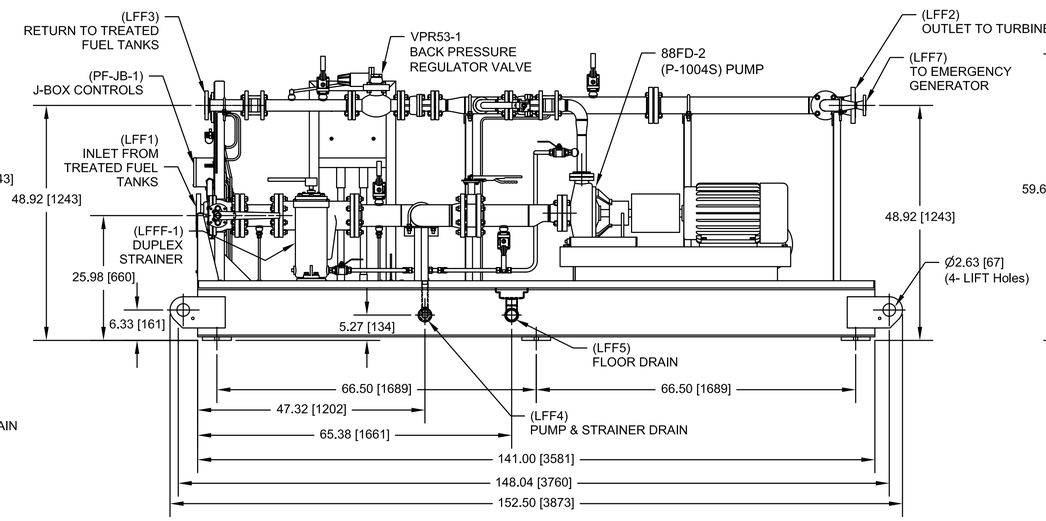

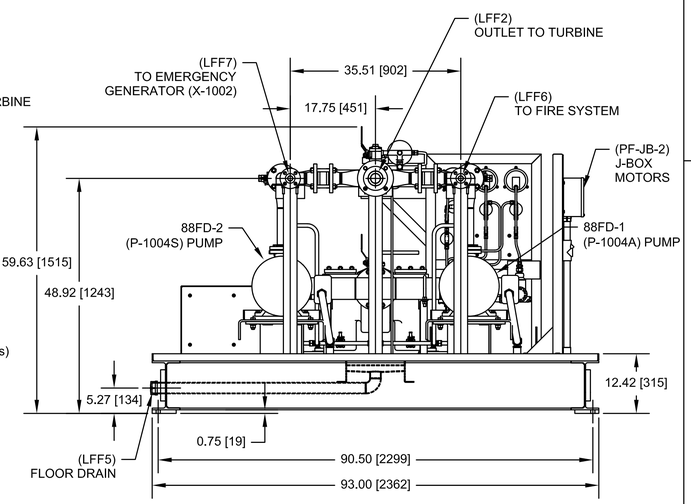

NOTES:

1. DO NOT PAINT INTERNALLY OR EXTERNALLY THREADED PARTS OR PARTS WITH FINISHED SURFACES THAT HAVE BEEN MACHINED FOR TIGHT TOLERANCE FITUP.
2. PAINT FINISH:
   BLAST SSPC-SP10.NACE 2,2 mil
   2-COATS PHENICON HS (LIGHT GRAY)
   PART-A (920A175)
   PART-B (700-C-685)
   H&C SHARK GRIP ADDITIVE (SLIP RESISTANT ADDITIVE) ON WALKING SURFACES.
3. CHECK FOR RESIDUAL STRESS AT THE PUMP PRIOR TO RELEASE AND OPERATION.
4. PRIOR TO OPERATION, THE FOLLOWING INSPECTIONS & TASKS SHOULD BE PERFORMED. -ALIGNMENT OF THE MOTOR & PUMP.
   -LUBRICATION OF THE MOTOR & PUMP.
   -CALIBRATION OF THE INSTRUMENTS & GAUGES.
   -VISUAL INSPECTION OF THE STARINER BASKETS.
5. SKID WEIGHT = 6200 lbs [2812kg]
6. ANCHOR SIZE = Ø0.75 [19]
7. REFER TO DRAWING _____ FOR FOUNDATION DETAILS
8. REFER TO AGM-02-0204-PLA-G-0061 FOR INTERCONNECTIONS
9. REFER TO AGM-02-0204-PLA-I-0046 (DEVICE SUMMARY) MLI 0414 FOR INSTRUMENT SET POINTS.

N° DE DOCUMENTO	DESCRIPCIÓN	REV.	FECHA
AGM-02-0204-PLA-I-0046	DEVICE SUMMARY		
AGM-02-0204-PLA-G-0061	INTERCONNECTION POINTS		
AGM-02-0204-PLA-P-0009	PROCESS FLOW DIAGRAM		
AGM-02-0204-PLA-P-0048	LIQUID FUEL SYSTEM P&ID (SHT 1 & 2)		
AGM-02-0204-PLA-G-0057	PLOT PLAN (SHT 2)		

DOCUMENTOS DE REFERENCIA

REV.	FECHA	REVISIONES O MODIFICACIONES	DIBUJO	REVISO	APROBO
0	29/08/11	ISSUED FOR CONSTRUCTUION	SAB	CB	TK
B	13/07/11	ISSUED FOR REVIEW	SAB	CB	TK
A	01/04/11	ISSUED FOR REVIEW	SAB	CB	TK

REF. FABRICANTE		
REF. FABRICANTE	FABRICANTE	O/C:

DERWICK | ProEnergy | CORPOELEC | La Electricidad de Caracas | SENECA

AMPLIACIÓN DE LA CAPACIDAD DE GENERACIÓN Y TRANSPORTE DE ELECTRICIDAD EN LA ISLA DE MARGARITA

LIQUID FUEL FORWARDING SKID
DUAL FUEL MOD. UNITS 298034 & 298035
(GENERAL ARRANGEMENT P-1004A/S)

PLANO N°:	REV:		
PROYECTO N°: 409-2956-1			
CALCULO:	PROYECTO:	ESCALA: 1:15	PLANO No: AGM-02-0204-PLA-M-0034
REVISADO: C. Brown	CALCULO:	FECHA: 29/08/11	
DIBUJO: S. Boerckel	REVISADO: J. Castillo	DISK. N°	
APROBADO: T. Koontz	DIBUJO:	ESC./PLOTEO:	
ARCHIVO:	APROBADO: M. Monticelli	ARCHIVO:	PAGINA: 1 DE: 2 — REV. 0

F_A1_11 – 841x594mm

LINEA DE CORTE DE ORIGINAL
LINEA DE CORTE DE COPIA

N° PLANO: AGM-02-0204-PLA-M-0034 | 0

IMPORTANTE

ESTE PLANO FUE ELABORADO EN AUTOCAD V.2008
CUALQUIER MODIFICACION REALIZADA EN CAMPO DEBERA SER NOTIFICADO A LA UNIDAD RESPONSABLE.
QUEDA PROHIBIDO CORREGIR ESTE PLANO SIN AUTORIZACION DE ESTA UNIDAD.

ALL DIMENSIONS IN BRACKETS [ ] ARE MILLIMETER; EXPRESSED DIMENSION ARE INCHES

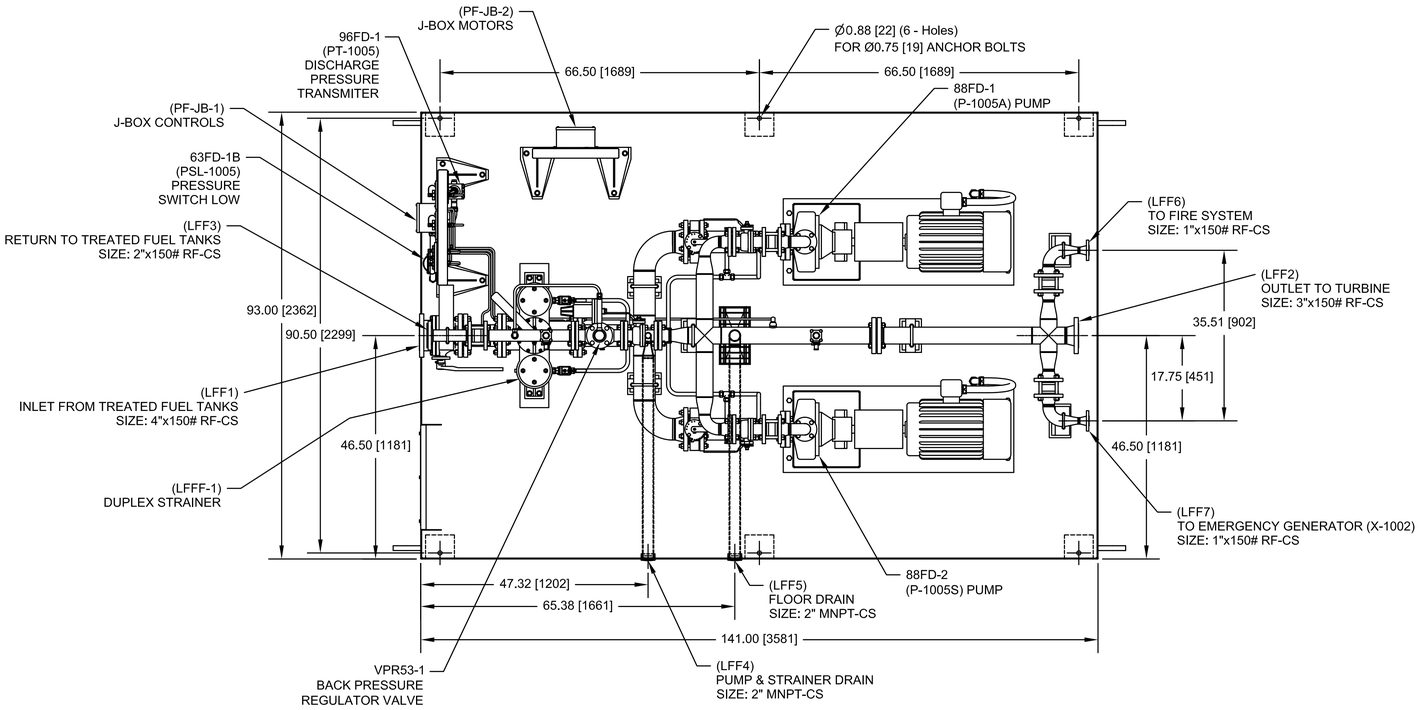

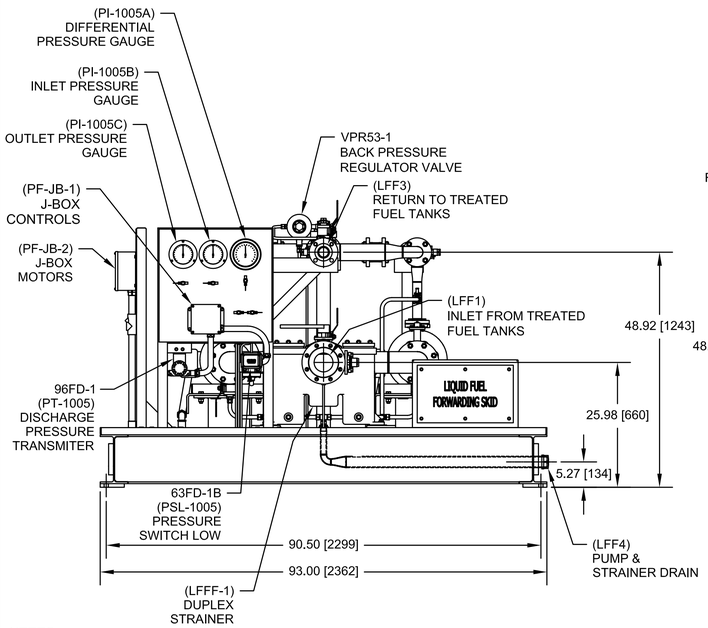

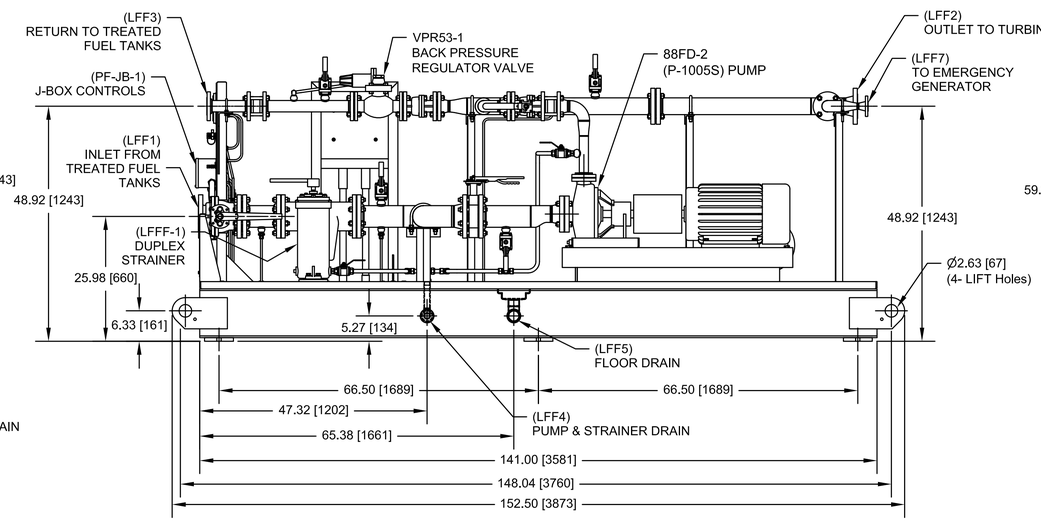

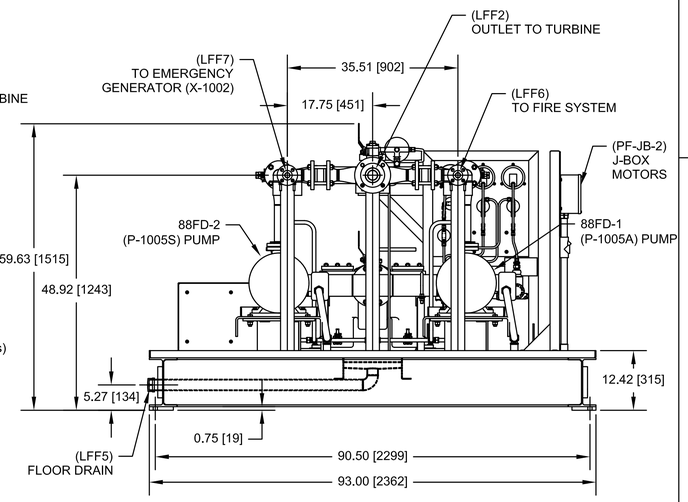

NOTES:

1. DO NOT PAINT INTERNALLY OR EXTERNALLY THREADED PARTS OR PARTS WITH FINISHED SURFACES THAT HAVE BEEN MACHINED FOR TIGHT TOLERANCE FITUP.
2. PAINT FINISH:
   BLAST SSPC-SP10.NACE 2,2 mil
   2-COATS PHENICON HS (LIGHT GRAY)
   PART-A (920A175)
   PART-B (700-C-685)
   H&C SHARK GRIP ADDITIVE (SLIP RESISTANT ADDITIVE) ON WALKING SURFACES.
3. CHECK FOR RESIDUAL STRESS AT THE PUMP PRIOR TO RELEASE AND OPERATION.
4. PRIOR TO OPERATION, THE FOLLOWING INSPECTIONS & TASKS SHOULD BE PERFORMED. -ALIGNMENT OF THE MOTOR & PUMP.
   -LUBRICATION OF THE MOTOR & PUMP.
   -CALIBRATION OF THE INSTRUMENTS & GAUGES.
   -VISUAL INSPECTION OF THE STARINER BASKETS.
5. SKID WEIGHT = 6200 lbs [2812kg]
6. ANCHOR SIZE = Ø0.75 [19]
7. REFER TO DRAWING _____ FOR FOUNDATION DETAILS
8. REFER TO AGM-02-0204-PLA-G-0061 FOR INTERCONNECTIONS
9. REFER TO AGM-02-0204-PLA-I-0046 (DEVICE SUMMARY) MLI 0414 FOR INSTRUMENT SET POINTS.

N° DE DOCUMENTO	DESCRIPCIÓN	REV.	FECHA
AGM-02-0204-PLA-I-0046	DEVICE SUMMARY		
AGM-02-0204-PLA-G-0061	INTERCONNECTION POINTS		
AGM-02-0204-PLA-P-0009	PROCESS FLOW DIAGRAM		
AGM-02-0204-PLA-P-0048	LIQUID FUEL SYSTEM P&ID (SHT 1 & 2)		
AGM-02-0204-PLA-G-0057	PLOT PLAN (SHT 2)		

DOCUMENTOS DE REFERENCIA

REV.	FECHA	REVISIONES O MODIFICACIONES	DIBUJO	REVISO	APROBO
0	29/08/11	ISSUED FOR CONSTRUCTION	SAB	CB	TK
B	13/07/11	ISSUED FOR REVIEW	SAB	CB	TK
A	01/04/11	ISSUED FOR REVIEW	SAB	CB	TK

REF. FABRICANTE		
REF. FABRICANTE	FABRICANTE	O/C:

DERWICK | ProEnergy SERVICES | CORPOELEC | La Electricidad de Caracas | SENECA

AMPLIACIÓN DE LA CAPACIDAD DE GENERACIÓN Y TRANSPORTE DE ELECTRICIDAD EN LA ISLA DE MARGARITA
LIQUID FUEL FORWARDING SKID
DUAL FUEL MOD. UNITS 298034 & 298035
(GENERAL ARRANGEMENT P1005A/S)

PLANO N°:	REV:		
PROYECTO N°: 409-2956-1			
CALCULO:	PROYECTO:	ESCALA: 1:15	PLANO No: AGM-02-0204-PLA-M-0034
REVISADO: C. Brown	CALCULO:	FECHA: 29/08/11	
DIBUJO: S. Boerckel	REVISADO: J. Castillo	DISK. N°	
APROBADO: T. Koontz	DIBUJO:	ESC./PLOTEO:	
ARCHIVO:	APROBADO: M. Monticelli	ARCHIVO:	PAGINA: 2 DE: 2 — REV. 0

F_A1_11 – 841x594mm

LINEA DE CORTE DE ORIGINAL
LINEA DE CORTE DE COPIA

N° PLANO: AGM-02-0204-PLA-M-0037 0

I M P O R T A N T E

ESTE PLANO FUE ELABORADO EN AUTOCAD V.2008 Y ES PARTE DE LA INGENIERIA DE DETALLE EN CAMPO DEBERA SER NOTIFICADO A LA UNIDAD RESPONSABLE.
QUEDA PROHIBIDO CORREGIR ESTE PLANO SIN AUTORIZACION DE ESTA UNIDAD.

ALL DIMENSIONS IN BRACKETS [ ] ARE MILLIMETER; EXPRESSED DIMENSIONS ARE INCHES

Parts List

ITEM	QTY	PART NUMBER	DETAIL	DESCRIPTION	MATERIAL	Thickness	Width	Length
1	1	409-2956-1-DWF7EA-700	409-2956-DWF7EA-0700	MECHANICAL	ASSEMBLY			
2	1	3051TG2A2A21AB4C6		3051 PRESSURE TRANSMITTER	ROSEMOUNT PRESSURE TRANSMITTER			
3	2	7112		4-1/2" PANEL MOUNT GRADE-2A	DWYER SERIES 7000 PRESSURE GAUGE			
4	1			J-BOX	6x6x4 STAINLESS JUNCTION BOX			
5	1			J-BOX	8x8x4 STAINLESS JUNCTION BOX			
6	3			3/4" LIQUID TIGHT STARIGHT CONNECTOR	LIQUID TIGHT STRAIGHT CONNECTOR			
7	1			3/4" LIQUID TIGHT 90Deg ELBOW	LIQUID TIGHT ELBOW			
8	1			LIQUID TIGHT	3/4" LIGUID TIGHT			12.09 in
9	1			LIQUID TIGHT	3/4" LIQUID TIGHT			13.78 in
10	2			MOTOR LIQUID TIGHT	1" LIQUID TIGHT			25.31 in
11	2	5354SST		1" LIQUID TIGHT 90Deg ELBOW	LIQUID TIGHT ELBOW			
12	2			1" STRAIGHT HUB CONNECTOR	STRAIGHT HUB CONNECTOR			
13	2			MOTOR CONDUIT	1 GALV RIDGED CONDUIT			20.00 in
14	2			MOTOR CONDUIT	1 GALV RIDGED CONDUIT			5.88 in
15	4			CONDUIT COUPLING	1 - CONDUIT COUPLING			
16	2			1" LIGUID TIGHT STRAIGHT CONNECTOR	LIQUID TIGHT STRAIGHT CONNECTOR			
17	2	EYA100		1" EYA SEALING FITTING	1" NPT EYA SEALING FITTING			
18	1			3/4" x 1/2M REDUCING SOCKET	NPT MALE & FEMALE REDUCING SOCKET			
19	2			1/4" Hex Head Plug	NPT HEX PLUG			
20	1			1/2" Hex Head Plug	NPT HEX PLUG			
21	1			PT TUBE	3/8" OD TUBE - SS			7.31 in
22	1			PT TUBING	3/8" OD TUBE - SS			150.84 in
23	1			PRESSURE DIFF TUBE	3/8" OD TUBE - SS			83.55 in
24	1			PRESSURE SWITCH LOW TUBE	3/8" OD TUBE - SS			19.72 in
25	2			LOW PRESSURE GAUGE TUBE	3/8" OD TUBE - SS			14.24 in
26	2			LOW PRESSURE GAUGE TUBE	3/8" OD TUBE - SS			2.82 in
27	1			BACK PRESSURE TUBE	1/2"OD TUBE - SS			28.91 in
28	4	SS-600-1-4RS		3/8TUBE x 1/4MNPT STRAIGHT FITTING	SWAGELOK STRAIGHT MNPT FITTING			
29	2	SS-600-1-8RS		3/8TUBE x 1/2MNPT FITTING	SWAGELOK STRAIGHT FITTING			
30	2	SS-600-2-4		3/8"OD x 1/4" NPT ELBOW	SWAGELOK MALE 90Deg ELBOW			
31	2	SS-600-2-8		3/8"OD x 1/2"NPT 90Deg ELBOW	SWAGELOK MALE 90Deg ELBOW NPT			
32	2	SS-600-3		3/8" TEE - TUBE	SAWGELOK 3/8" TEE - TUBE			
33	1	SS-810-1-8		1/2"OD x 1/2"MNPT FITTING	SWAGELOK STRAIGHT FITTING STAINLESS			
34	1	SS-810-2-8		1/2"OD x 1/2"NPT ELBOW	SWAGELOK 90DEG ELBOW STAINLESS			
35	6			Type A Plain Washer	#10 - TYPE-A PLAIN FLAT WASHER - CAD			
36	14			Type A Plain Washer	1/4" - TYPE-A PLAIN FLAT WASHER - CAD			
37	12			HELICAL SPRING LOCK WASHER	1/4" - HELICOID SPRING LOCK WASHER - CAD			
38	6	4319-0832-00N		10-24 HEX KEPS NUT	KEPS HEX NUT			
39	2			HEX NUT	1/4-20 - HEX NUT CAD PLATED - GRADE-5			
40	8			HEX NUT	1/4-20 - HEX NUT ZINC PLATED - GRADE-5			
41	10			1/4-20 x 3/4 in LONG HHCS	HEX BOLT CAD PLATED - GRADE-5			0.75 in
42	2			1/4-20 x 1 in LONG HHCS	HEX BOLT CAD PLATED - GRADE-5			1.00 in
43	6			#10-24 x 1 in PHILLIPS PAN HEAD SCREW	10-24 UNC - Steel, High Strength Low Alloy			1.00 in
44	2	0153V3		1/4"FNPT GAGE VALVE w/STEM TEST CONN	DRAGON GAGE VALVE w/ STEM TEST			
45	1	52NN-K117-M1-B2A-TT		PRESSURE & VACUUM SWITCH (40-0-40 IN WC)	SOR PRESSURE & VACUUM SWITCH			

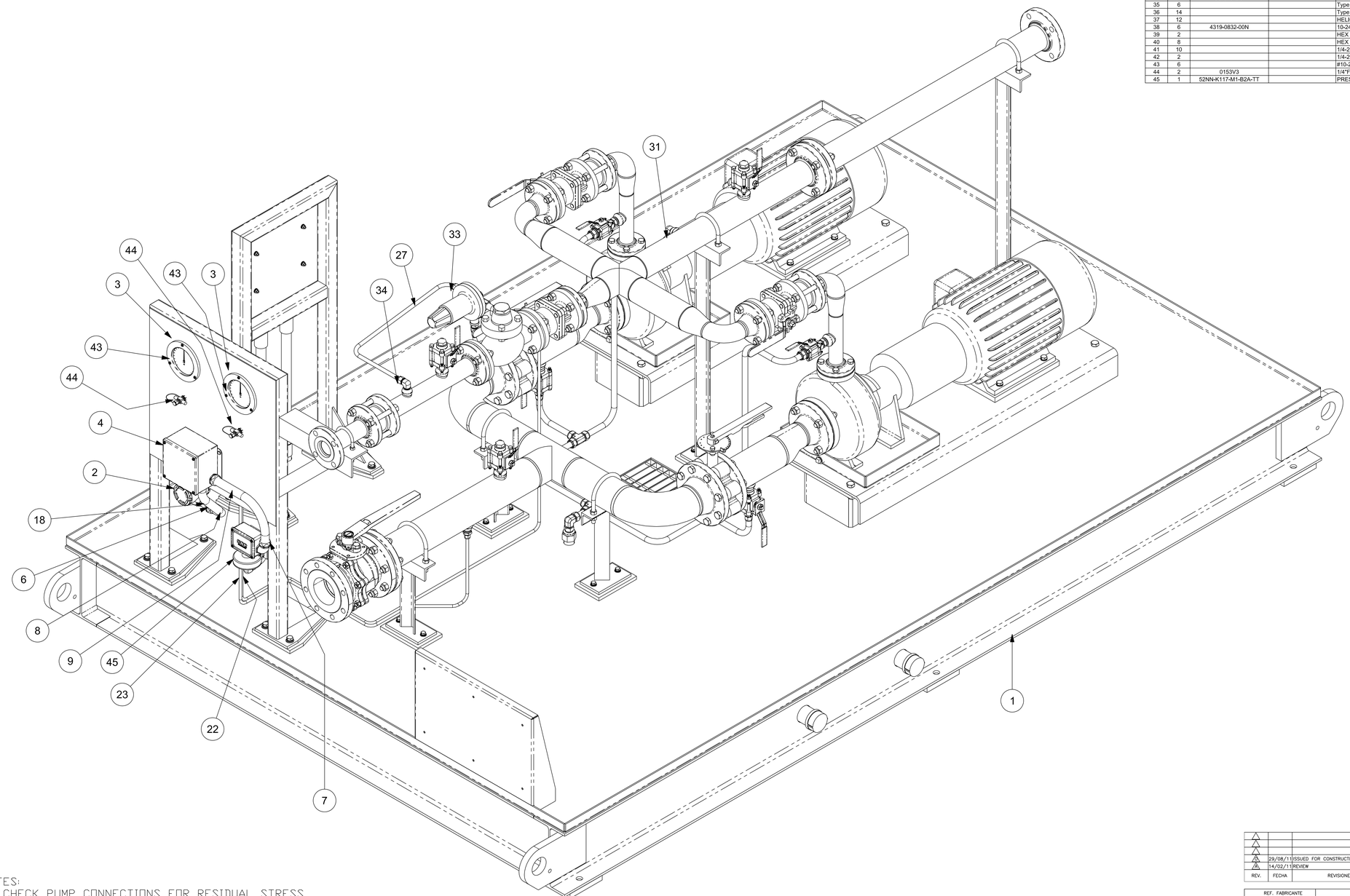

NOTES:
1. CHECK PUMP CONNECTIONS FOR RESIDUAL STRESS

0	29/08/11	ISSUED FOR CONSTRUCTION	SAB	CB	TK
A	14/02/11	REVIEW	SAB	CB	TK
REV.	FECHA	REVISIONES O MODIFICACIONES	DIBUJO	REVISO	APROBO

REF. FABRICANTE		
REF. FABRICANTE	FABRICANTE	O/C:

N° DE DOCUMENTO	DESCRIPCIÓN	REV.	FECHA
AGM-02-0204-PLA-P-0047	DEMIN WATER FORWARDING/INJECTION SYSTEM P&ID		
AGM-02-0204-PLA-M-0036	DEMIN WATER FORWARDING SKID - GENERAL ARRANGEMENT		

DOCUMENTOS DE REFERENCIA

DERWICK · ProEnergy SERVICES · CORPOELEC · La Electricidad de Caracas · SENECA

AMPLIACIÓN DE LA CAPACIDAD DE GENERACIÓN Y TRANSPORTE DE ELECTRICIDAD EN LA ISLA DE MARGARITA

DEMIN WATER FORWARDING SKID
DUAL FUEL MOD. UNITS 298034 & 298035
(ASSEMBLY)

PLANO N°:	REV:		PLANO No:
PROYECTO N°: 409-2956-1			AGM-02-0204-PLA-M-0037
CALCULO:	PROYECTO:	ESCALA: 1:5	
REVISADO: C. Brown	CALCULO:	FECHA: 29/08/11	
DIBUJO: S. Boerckel	REVISADO: J. Castillo	DISK. N°:	
APROBADO: T. Koontz	DIBUJO:	ESC./PLOTEO:	
ARCHIVO:	APROBADO: M. Monticelli	ARCHIVO:	PAGINA: 1 DE: 3 REV: 0

F_AO_11 – 1189x841mm

LINEA DE CORTE DE COPIA
LINEA DE CORTE DE ORIGINAL

N° PLANO: AGM-02-0204-PLA-M-0037 0

ALL DIMENSIONS IN BRACKETS [ ] ARE MILLIMETER EXPRESSED DIMENSIONS ARE INCHES

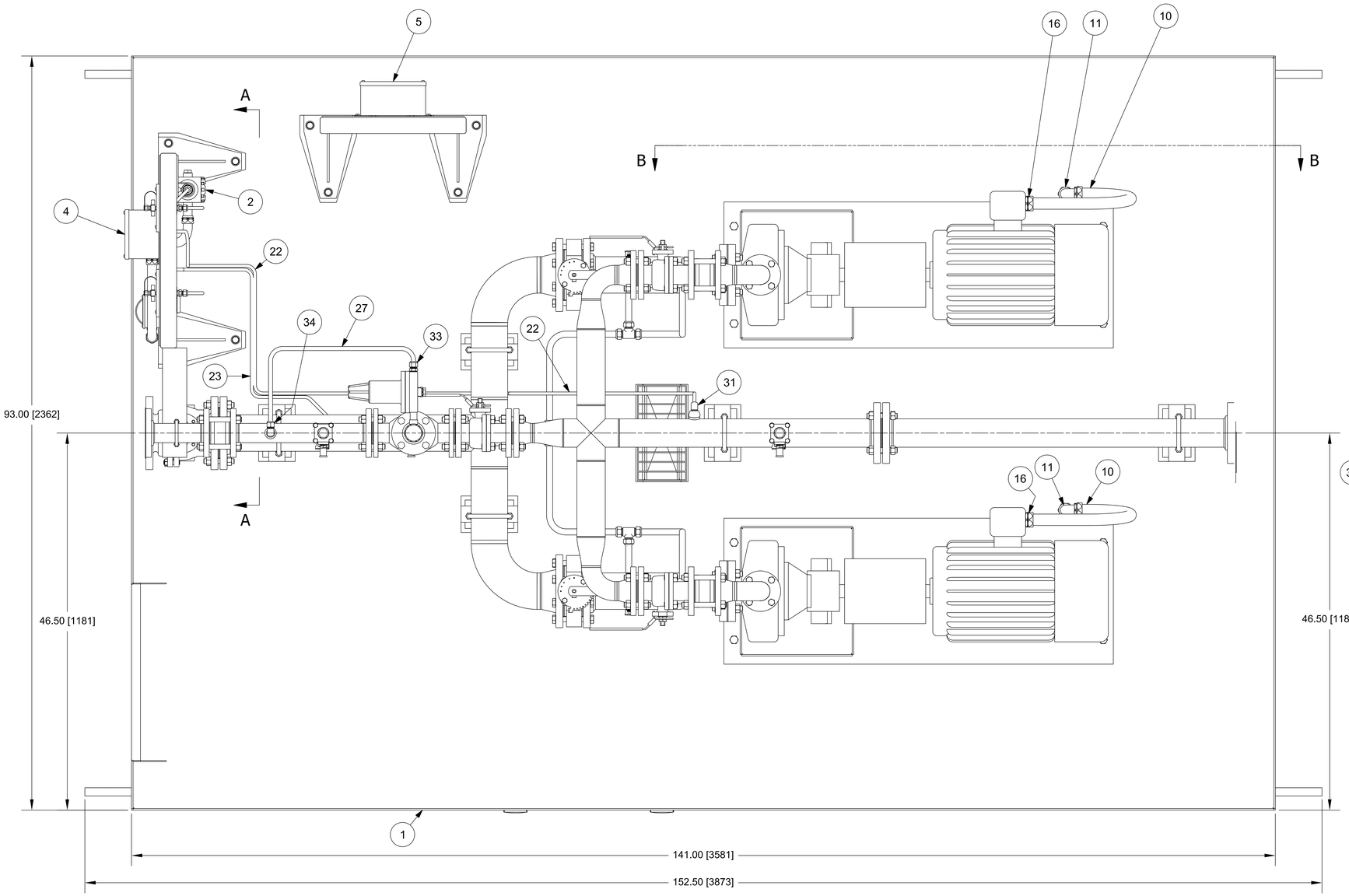

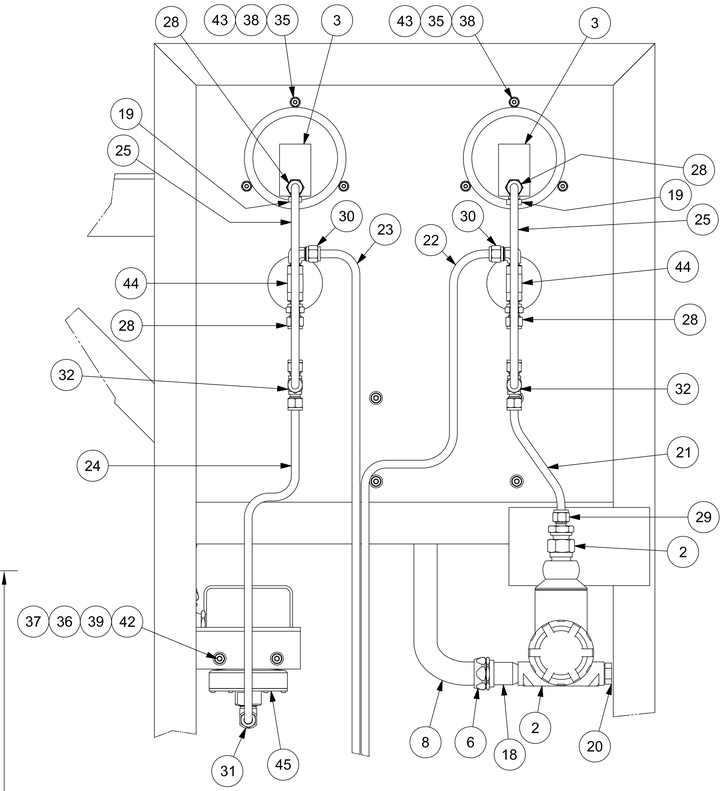

DETAIL A
SCALE 1:2.5

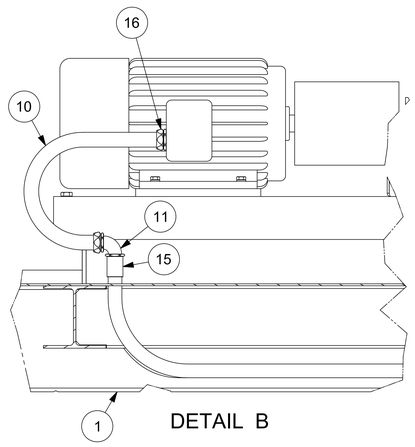

DETAIL B

REV.	FECHA	REVISIONES O MODIFICACIONES	DIBUJO	REVISO	APROBO
3	29/08/11	ISSUED FOR CONSTRUCTION	SAB	CB	TK
2	14/02/11	REVIEW	SAB	CB	TK
1					
0					

REF. FABRICANTE		
REF. FABRICANTE	FABRICANTE	O/C:

N° DE DOCUMENTO	DESCRIPCIÓN	REV.	FECHA
AGM-02-0204-PLA-P-0047	DEMIN WATER FORWARDING/INJECTION SYSTEM P&ID		
AGM-02-0204-PLA-M-0038	DEMIN WATER FORWARDING SKID – GENERAL ARRANGEMENT		

DOCUMENTOS DE REFERENCIA

DERWICK · ProEnergy · CORPOELEC · Electricidad de Caracas · SENECA

AMPLIACIÓN DE LA CAPACIDAD DE GENERACIÓN Y TRANSPORTE DE ELECTRICIDAD EN LA ISLA DE MARGARITA

DEMIN WATER FORWARDING SKID
DUAL FUEL MOD. UNITS 298034 & 298035
(ASSEMBLY)

PLANO N°:	REV:		
PROYECTO N°: 409-2956-1			
CALCULO:	PROYECTO:	ESCALA: 1:5	PLANO No: AGM-02-0204-PLA-M-0037
REVISADO: C. Brown	CALCULO:	FECHA: 29/08/11	
DIBUJO: S. Boerckel	REVISADO: J. Castillo	DISK. N°	
APROBADO: T. Koontz	DIBUJO:	ESC./PLOTEO:	
ARCHIVO:	APROBADO: M. Montilla	ARCHIVO:	PAGINA: 2 DE: 3 REV: 0

F_A0_11 – 1189x841mm

LINEA DE CORTE DE ORIGINAL
LINEA DE CORTE DE COPIA

N° PLANO: ACM-02-0204-PLA-M-0037 0

I M P O R T A N T E
ESTE PLANO FUE ELABORADO EN AUTOCAD V.2008
CUALQUIER CAMBIO REALIZADO EN CAMPO
DEBERA SER NOTIFICADO A LA UNIDAD
RESPONSABLE.
QUEDA PROHIBIDO CORREGIR ESTE PLANO SIN
AUTORIZACION DE ESTA UNIDAD.

ALL DIMENSIONS IN BRACKETS [ ] ARE MILLIMETER; EXPRESSED DIMENSIONS ARE INCHES

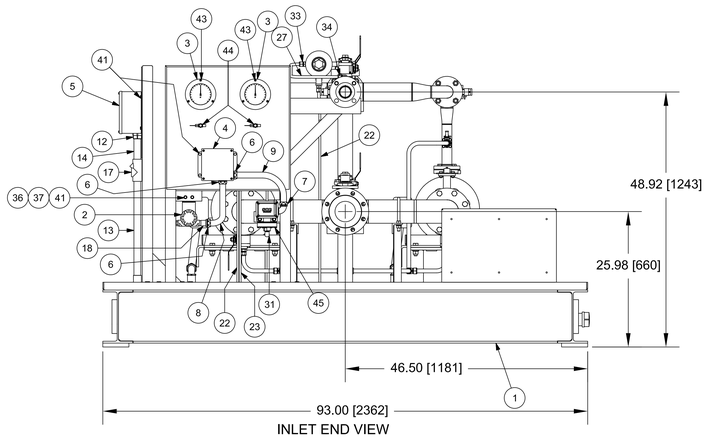

INLET END VIEW

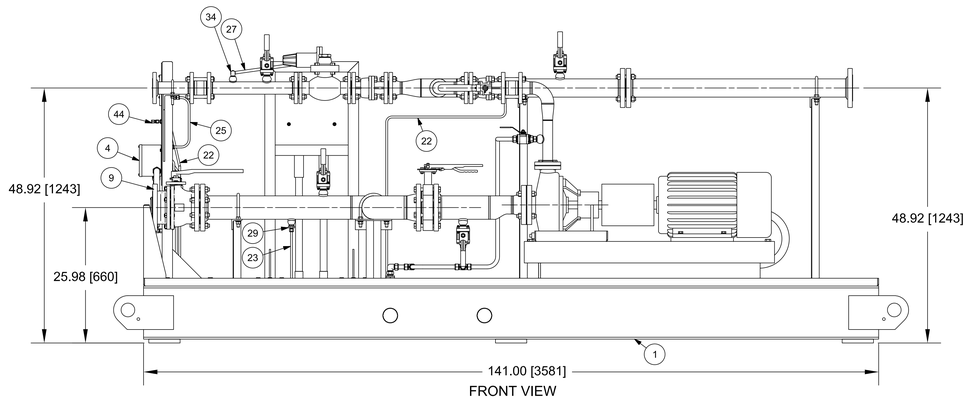

FRONT VIEW

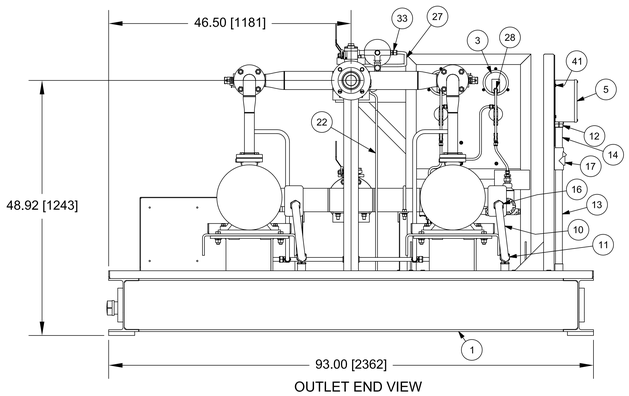

OUTLET END VIEW

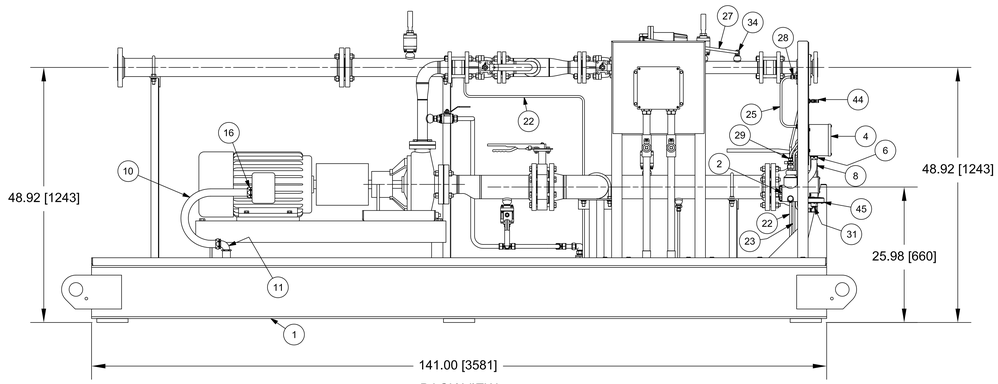

BACK VIEW

N° DE DOCUMENTO	DESCRIPCIÓN	REV.	FECHA
ACM-02-0204-PLA-P-0047	DEMIN WATER FORWARDING/INJECTION SYSTEM P&ID		
ACM-02-0204-PLA-M-0038	DEMIN WATER FORWARDING SKID – GENERAL ARRANGEMENT		

DOCUMENTOS DE REFERENCIA

REV.	FECHA	REVISIONES O MODIFICACIONES	DIBUJO	REVISO	APROBO
3					
2					
1					
0	29/08/11	ISSUED FOR CONSTRUCTION	SAB	CB	TK
A	14/02/11	REVIEW	SAB	CB	TK

REF. FABRICANTE		
REF. FABRICANTE	FABRICANTE	O/C:

DERWICK — ProEnergy — CORPOELEC — Electricidad de Caracas — SENECA

AMPLIACIÓN DE LA CAPACIDAD DE GENERACIÓN Y TRANSPORTE DE ELECTRICIDAD EN LA ISLA DE MARGARITA

DEMIN WATER FORWARDING SKID
DUAL FUEL MOD. UNITS 298034 & 298035
(ASSEMBLY)

PLANO N°: 409-2956-DMFTEA-0000	REV: 0		
PROYECTO N°: 409-2956-1			
CALCULO:	PROYECTO:	ESCALA: 1:10	PLANO No:
REVISADO: C. Brown	CALCULO:	FECHA: 29/08/11	ACM-02-0204-PLA-M-0037
DIBUJO: S. Boerckel	REVISADO: J. Castillo	DISK. N°	
APROBADO: T. Koontz	DIBUJO:	ESC./PLOTEO:	
ARCHIVO:	APROBADO: M. Montice	ARCHIVO:	PAGINA: 3 DE: 3 REV: 0

F_A0_11 – 1189x841mm.

LINEA DE CORTE DE COPIA
LINEA DE CORTE DE ORIGINAL

LINEA DE CORTE DE ORIGINAL
LINEA DE CORTE DE COPIA

N° PLANO: AGM-02-0204-PLA-M-0038 | 0

I M P O R T A N T E
ESTE PLANO FUE ELABORADO EN AUTOCAD V.2008 Y CUALQUIER MODIFICACIÓN HECHA EN CAMPO DEBERA SER NOTIFICADO A LA UNIDAD RESPONSABLE.
QUEDA PROHIBIDO CORREGIR ESTE PLANO SIN AUTORIZACION DE ESTA UNIDAD.

ALL DIMENSIONS IN BRACKETS [ ] ARE MILLIMETER; EXPRESSED DIMENSIONS ARE INCHES

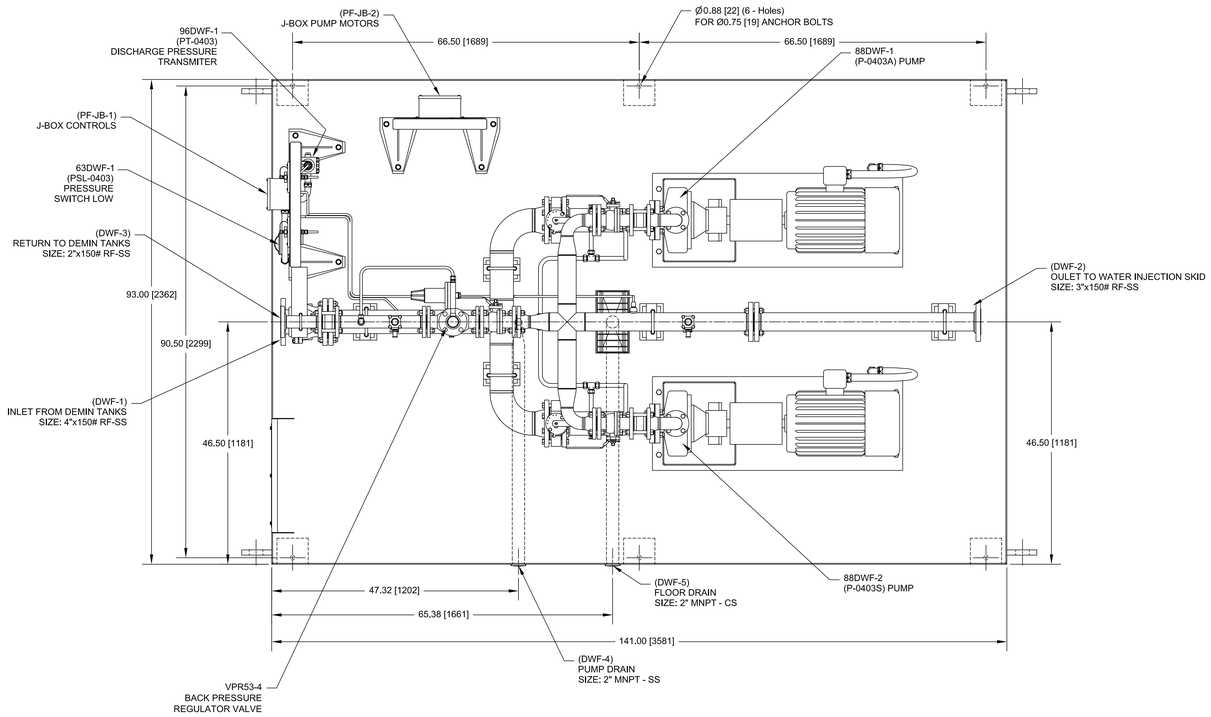

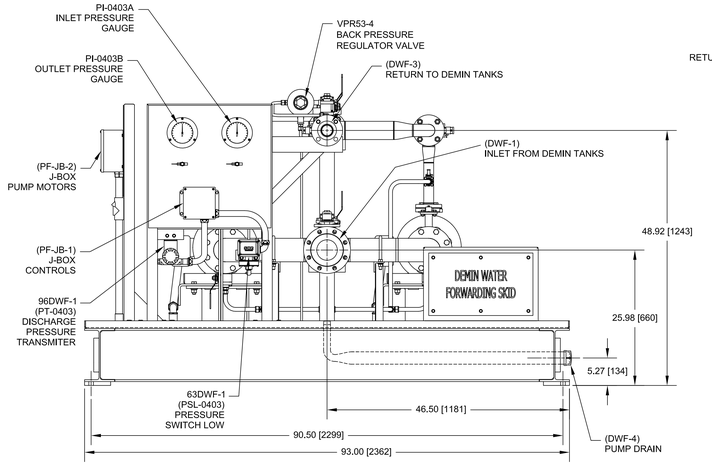

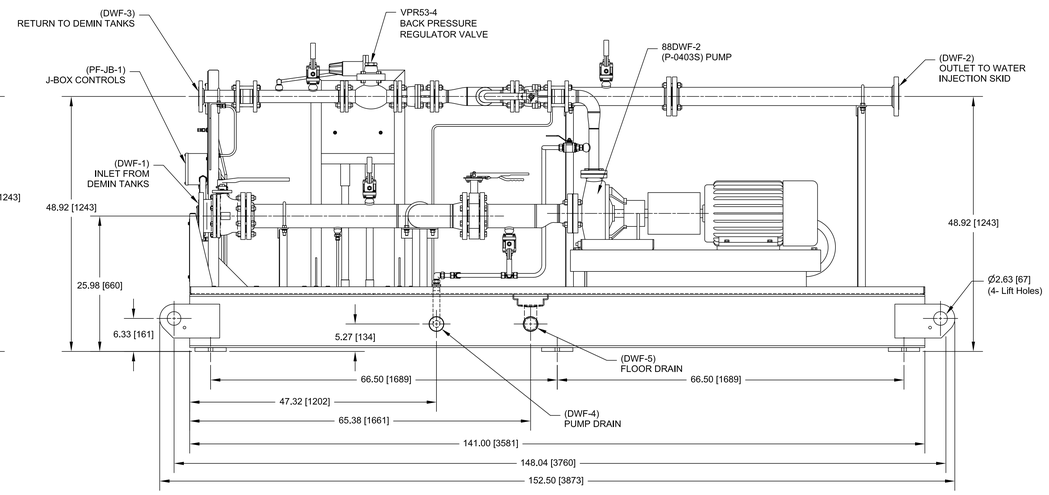

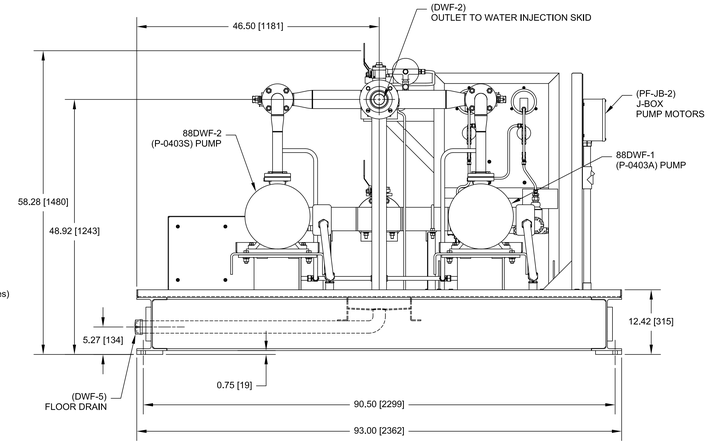

NOTES:

1. DO NOT PAINT INTERNALLY OR EXTERNALLY THREADED PARTS OR PARTS WITH FINISHED SURFACES THAT HAVE BEEN MACHINED FOR TIGHT TOLERANCE FITUP.
2. PAINT FINISH:
   BLAST SSPC-SP10.NACE 2,2 mil
   2-COATS PHENICON HS (LIGHT GRAY)
   PART-A (920A175)
   PART-B (700-C-685)
   H&C SHARK GRIP ADDITIVE (SLIP RESISTANT ADDITIVE) ON WALKING SURFACES.
3. CHECK FOR RESIDUAL STRESS AT THE PUMP PRIOR TO RELEASE AND OPERATION.
4. PRIOR TO OPERATION, THE FOLLOWING INSPECTIONS & TASKS SHOULD BE PERFORMED. -ALIGNMENT OF THE MOTOR & PUMP.
   -LUBRICATION OF THE MOTOR & PUMP.
   -CALIBRATION OF THE INSTRUMENTS & GAUGES.
   -VISUAL INSPECTION OF THE STARINER BASKETS.
5. SKID WEIGHT = 6200 lbs [2812kg]
6. ANCHOR SIZE = Ø0.75 [19]
7. REFER TO DRAWING _____ FOR FOUNDATION DETAILS
8. REFER TO AGM-02-0204-PLA-G-0061 FOR INTERCONNECTIONS
9. REFER TO AGM-02-0204-PLA-I-0046 (DEVICE SUMMARY) MLI 0414 FOR INSTRUMENT SET POINTS

N° DE DOCUMENTO	DESCRIPCIÓN	REV.	FECHA
AGM-02-0204-PLA-I-0046	DEVICE SUMMARY		
AGM-02-0204-PLA-P-0009	PROCESS FLOW DIAGRAM		
AGM-02-0204-PLA-G-0061	INTERCONNECTION POINTS		
AGM-02-0204-PLA-P-0047	DEMIN WATER FORWARDING INJECTION SYSTEM P&ID (SHT 1 & 2)		
AGM-02-0204-PLA-G-0057	PLOT PLAN (SHT 3)		

DOCUMENTOS DE REFERENCIA

REV.	FECHA	REVISIONES O MODIFICACIONES	DIBUJO	REVISO	APROBO
0	29/08/11	ISSUED FOR CONSTRUCTION	SAB	CB	TK
1	13/07/11	ISSUED FOR REVIEW	SAB	CB	TK
2	02/04/11	ISSUED FOR REVIEW	SAB	CB	TK

REF. FABRICANTE		
REF. FABRICANTE	FABRICANTE	O/C:

DERWICK | ProEnergy | CORPOELEC | La Electricidad de Caracas | SENECA

AMPLIACIÓN DE LA CAPACIDAD DE GENERACIÓN Y TRANSPORTE DE ELECTRICIDAD EN LA ISLA DE MARGARITA

DEMIN WATER FORWARDING SKID
DUAL FUEL MOD. UNITS 298034 & 298035
(GENRAL ARRANGEMENT P-0403A/S)

PLANO Nº:	REV:		
PROYECTO Nº: 409-2956-1			
CALCULO:	PROYECTO:	ESCALA: 1:10	PLANO Nº: AGM-02-0204-PLA-M-0038
REVISADO: C. Brown	CALCULO:	FECHA: 29/08/11	
DIBUJO: S. Boerckel	REVISADO: J. Castillo	DISK. Nº	
APROBADO: T. Koontz	DIBUJO:	ESC./PLOTED:	
ARCHIVO:	APROBADO: M. Monticelli	ARCHIVO:	PAGINA: 1 DE: 2 — REV: 0

F_A0_11 - 1189x841mm

LINEA DE CORTE DE COPIA
LINEA DE CORTE DE ORIGINAL

N° PLANO: AGM-02-0204-PLA-M-0038 0

LINEA DE CORTE DE ORIGINAL
LINEA DE CORTE DE COPIA

I M P O R T A N T E
ESTE PLANO FUE ELABORADO EN AUTOCAD V.2008 Y CUALQUIER MODIFICACIÓN HECHA EN CAMPO DEBERA SER NOTIFICADO A LA UNIDAD RESPONSABLE.
QUEDA PROHIBIDO CORREGIR ESTE PLANO SIN AUTORIZACION DE ESTA UNIDAD.

ALL DIMENSIONS IN BRACKETS [ ] ARE MILLIMETER; EXPRESSED DIMENSIONS ARE INCHES

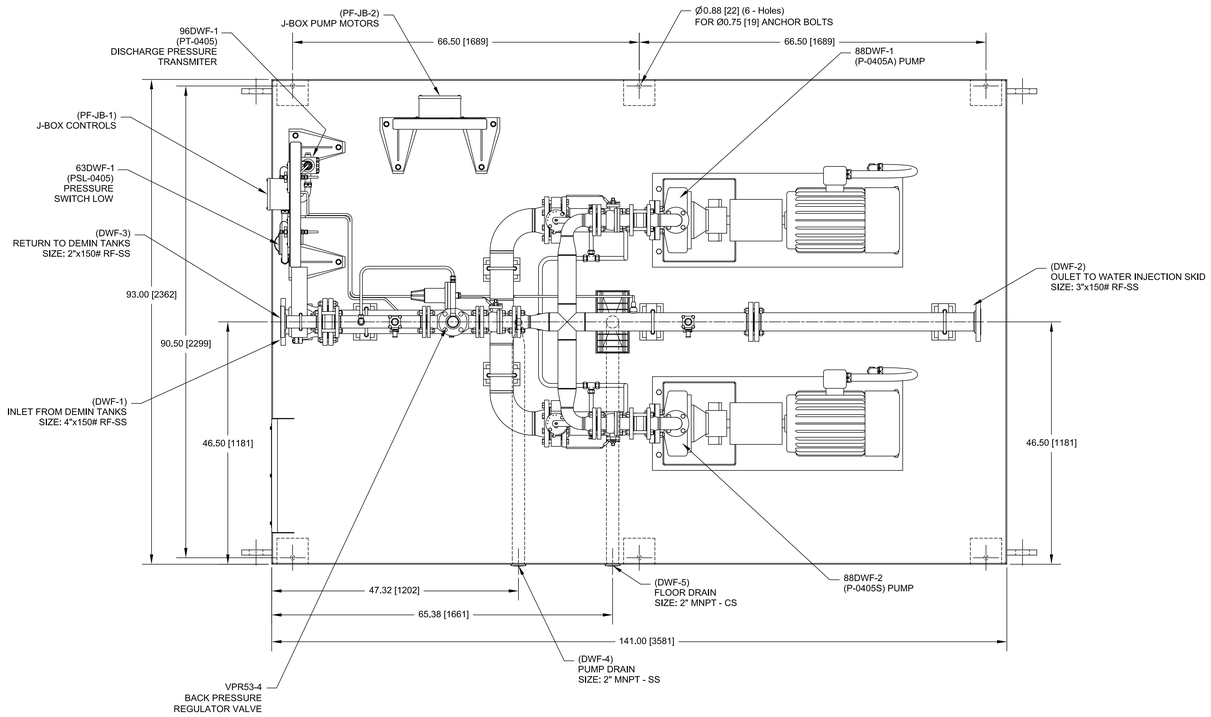

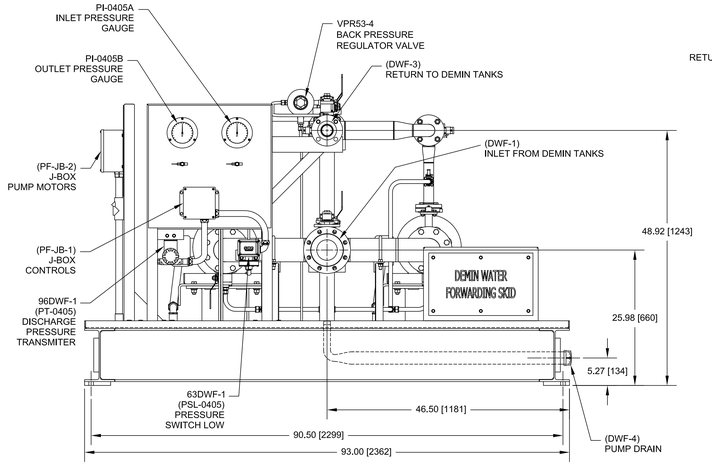

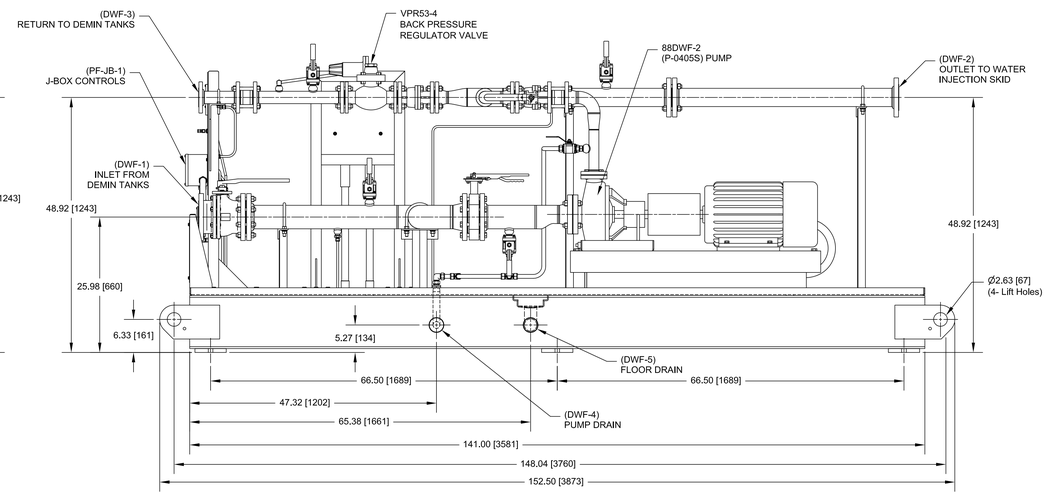

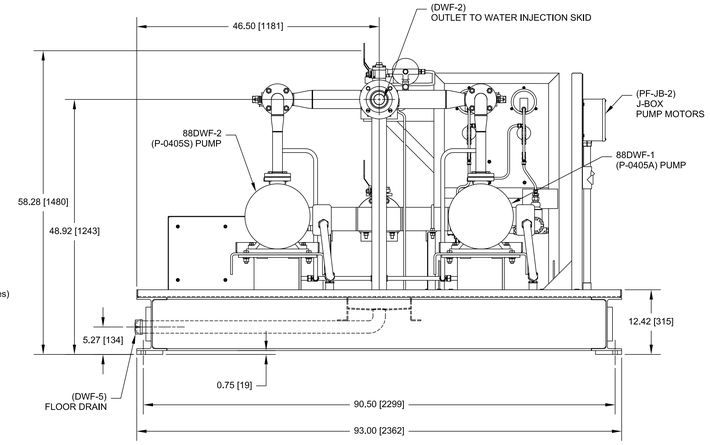

NOTES:

1. DO NOT PAINT INTERNALLY OR EXTERNALLY THREADED PARTS OR PARTS WITH FINISHED SURFACES THAT HAVE BEEN MACHINED FOR TIGHT TOLERANCE FITUP.
2. PAINT FINISH:
   BLAST SSPC-SP10.NACE 2,2 mil
   2-COATS PHENICON HS (LIGHT GRAY)
   PART-A (920A175)
   PART-B (700-C-685)
   H&C SHARK GRIP ADDITIVE (SLIP RESISTANT ADDITIVE) ON WALKING SURFACES.
3. CHECK FOR RESIDUAL STRESS AT THE PUMP PRIOR TO RELEASE AND OPERATION.
4. PRIOR TO OPERATION, THE FOLLOWING INSPECTIONS & TASKS SHOULD BE PERFORMED. -ALIGNMENT OF THE MOTOR & PUMP.
   -LUBRICATION OF THE MOTOR & PUMP.
   -CALIBRATION OF THE INSTRUMENTS & GAUGES.
   -VISUAL INSPECTION OF THE STARINER BASKETS.
5. SKID WEIGHT = 6200 lbs [2812kg]
6. ANCHOR SIZE = Ø0.75 [19]
7. REFER TO DRAWING _____ FOR FOUNDATION DETAILS
8. REFER TO AGM-02-0204-PLA-G-0061 FOR INTERCONNECTIONS
9. REFER TO AGM-02-0204-PLA-I-0046 (DEVICE SUMMARY) MLI 0414 FOR INSTRUMENT SET POINTS

N° DE DOCUMENTO	DESCRIPCIÓN	REV.	FECHA
AGM-02-0204-PLA-I-0046	DEVICE SUMMARY		
AGM-02-0204-PLA-P-0009	PROCESS FLOW DIAGRAM		
AGM-02-0204-PLA-G-0061	INTERCONNECTION POINTS		
AGM-02-0204-PLA-P-0047	DEMIN WATER FORWARDING INJECTION SYSTEM P&ID (SHT 1 & 2)		
AGM-02-0204-PLA-G-0057	PLOT PLAN (SHT 3)		

DOCUMENTOS DE REFERENCIA

REV.	FECHA	REVISIONES O MODIFICACIONES	DIBUJO	REVISO	APROBO
3					
2					
1	29/08/11	ISSUED FOR CONSTRUCTION	SAB	CB	TK
0	13/07/11	ISSUED FOR REVIEW	SAB	CB	TK
A	02/04/11	ISSUED FOR REVIEW	SAB	CB	TK

REF. FABRICANTE			
REF. FABRICANTE	FABRICANTE	O/C:	

DERWICK · ProEnergy · CORPOELEC · La Electricidad de Caracas · SENECA

AMPLIACIÓN DE LA CAPACIDAD DE GENERACIÓN Y TRANSPORTE DE ELECTRICIDAD EN LA ISLA DE MARGARITA

DEMIN WATER FORWARDING SKID
DUAL FUEL MOD. UNITS 298034 & 298035
(GENRAL ARRANGEMENT P-0405A/S)

PLANO N°: 409-2956-1	REV:		
PROYECTO N°: 409-2956-1			
CALCULO:	PROYECTO:	ESCALA: 1:10	PLANO N°: AGM-02-0204-PLA-M-0038
REVISADO: C. Brown	CALCULO:	FECHA: 29/08/11	
DIBUJO: S. Boerckel	REVISADO: J. Castillo	DISK. N°	
APROBADO: T. Koontz	DIBUJO:	ESC./PLOTED:	
ARCHIVO:	APROBADO: M. Monticelli	ARCHIVO:	PAGINA: 2 DE: 2 REV: 0

F_A0_11 - 1189x841mm

LINEA DE CORTE DE COPIA
LINEA DE CORTE DE ORIGINAL

LINEA DE CORTE DE ORIGINAL
LINEA DE CORTE DE COPIA

N° PLANO: AGM-02-0204-PLA-M-0041 | 2

IMPORTANTE

ESTE PLANO FUE ELABORADO EN AUTOCAD V.2008
CUALQUIER MODIFICACION REALIZADA EN CAMPO DEBERA SER NOTIFICADO A LA UNIDAD RESPONSABLE.
QUEDA PROHIBIDO CORREGIR ESTE PLANO SIN AUTORIZACION DE ESTA UNIDAD.

ALL DIMENSIONS IN BRACKETS [ ] ARE IN MILLIMETERS.
ALL EXPRESSES DIMENSIONS ARE IN INCHES.

NOTES:

1. WHEN PLACING SKID ARRANGE SO THE ACCES DOOR FACES AS SHOWN ON DWG AGM-02-0204-PLA-M-0073.
2. REFER TO DRAWING AGM-02-0204-PLA-G-0057 FOR LOCATION COORDINATES OF SKIDS.
3. THIS DRAWING REPRESENTS ONLY THE SCOPE OF WORK BY DERWICK.
4. ANY ADDITIONAL INTERCONNECTIONS BY OTHERS.
5. SKID WEIGHT = 12744 lbs [5781kg].
6. ANCHOR SIZE = Ø1.00 [25.4]
7. REFER TO DRAWING _____ FOR FOUNDATION DETAILS
8. REFER TO AGM-02-0204-PLA-G-0061 FOR INTERCONNECTION POINTS.

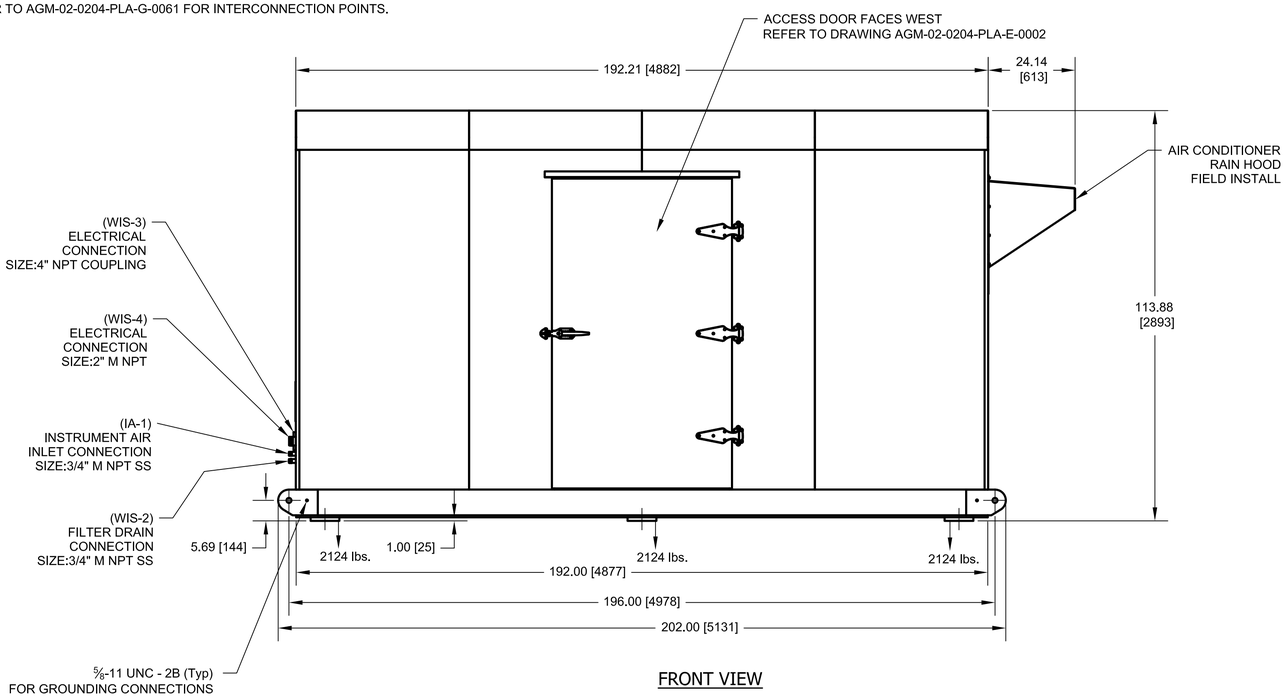

FRONT VIEW

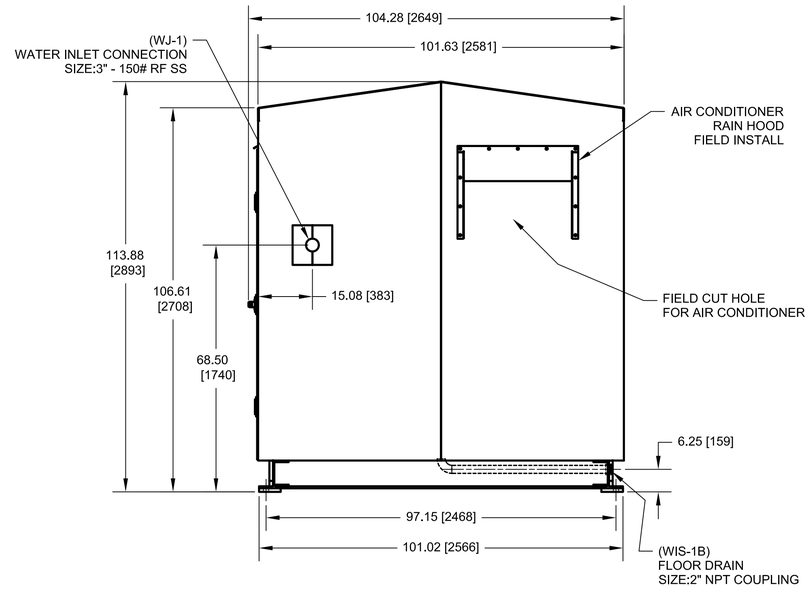

END VIEW

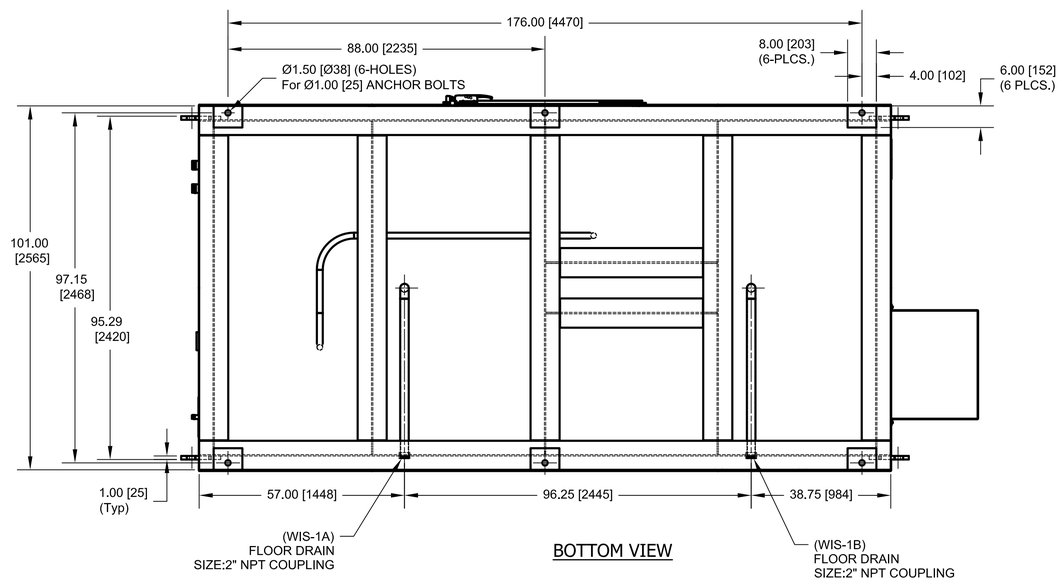

BOTTOM VIEW

N° DE DOCUMENTO	DESCRIPCIÓN	REV.	FECHA
AGM-02-0204-PLA-P-0047	DEMIN WATER FORWARDING INJECTION SYSTEM PID		
AGM-02-0204-PLA-G-0061	INTERCONNECTION POINTS		
AGM-02-0204-PLA-G-0057	PLOT PLAN		
AGM-02-0204-PLA-M-0073	MECHANICAL OUTLINE – GAS TURBINE GENERATOR		

DOCUMENTOS DE REFERENCIA

REV.	FECHA	REVISIONES O MODIFICACIONES	DIBUJO	REVISO	APROBO
2	13/07/11	ISSUED FOR CONSTRUCTION	SAB	CB	TK
1	24/05/11	REVISED PER INELMECA COMMENTS	SAB	CB	TK
0	10/03/11	ISSUED FOR FABRICATION	SAB	CB	TK

REF. FABRICANTE		
REF. FABRICANTE	FABRICANTE	O/C:

DERWICK ASSOCIATES CORP. | ProEnergy SERVICES | CORPOELEC CORPORACIÓN ELÉCTRICA NACIONAL | La Electricidad de Caracas | GERENCIA FUNCIONAL DE INGENIERIA Y PROYECTOS | SENECA

AMPLIACIÓN DE LA CAPACIDAD DE GENERACIÓN Y TRANSPORTE DE ELECTRICIDAD EN LA ISLA DE MARGARITA

PLANO N°: | REV:

PROYECTO N°: 409-2956-1

WATER INJECTION SKID
UNITS 298034 & 298035
GENERAL ARRANGEMENT (X-0405A & X-0405B)

CALCULO:	PROYECTO:	ESCALA: 1:20	PLANO No: AGM-02-0204-PLA-M-0041
REVISADO: C. Brown	CALCULO:	FECHA: 13/07/11	
DIBUJO: S. Boerckel	REVISADO: J. Castillo	DISK. N°	
APROBADO: T. Koontz	DIBUJO:	ESC./PLOTEO:	REV. 2
ARCHIVO:	APROBADO: M. Monticelli	ARCHIVO:	PAGINA: 1 DE: 2

F_A1_11 – 841x594mm

LINEA DE CORTE DE COPIA
LINEA DE CORTE DE ORIGINAL

LINEA DE CORTE DE ORIGINAL
LINEA DE CORTE DE COPIA

N° PLANO: AGM-02-0204-PLA-M-0041 | 2

IMPORTANTE

ESTE PLANO FUE ELABORADO EN AUTOCAD V.2008
CUALQUIER MODIFICACION REALIZADA EN CAMPO
DEBERA SER NOTIFICADO A LA UNIDAD
RESPONSABLE.
QUEDA PROHIBIDO CORREGIR ESTE PLANO SIN
AUTORIZACION DE ESTA UNIDAD.

ALL DIMENSIONS IN BRACKETS [ ] ARE IN MILLIMETERS.
ALL EXPRESSES DIMENSIONS ARE IN INCHES.

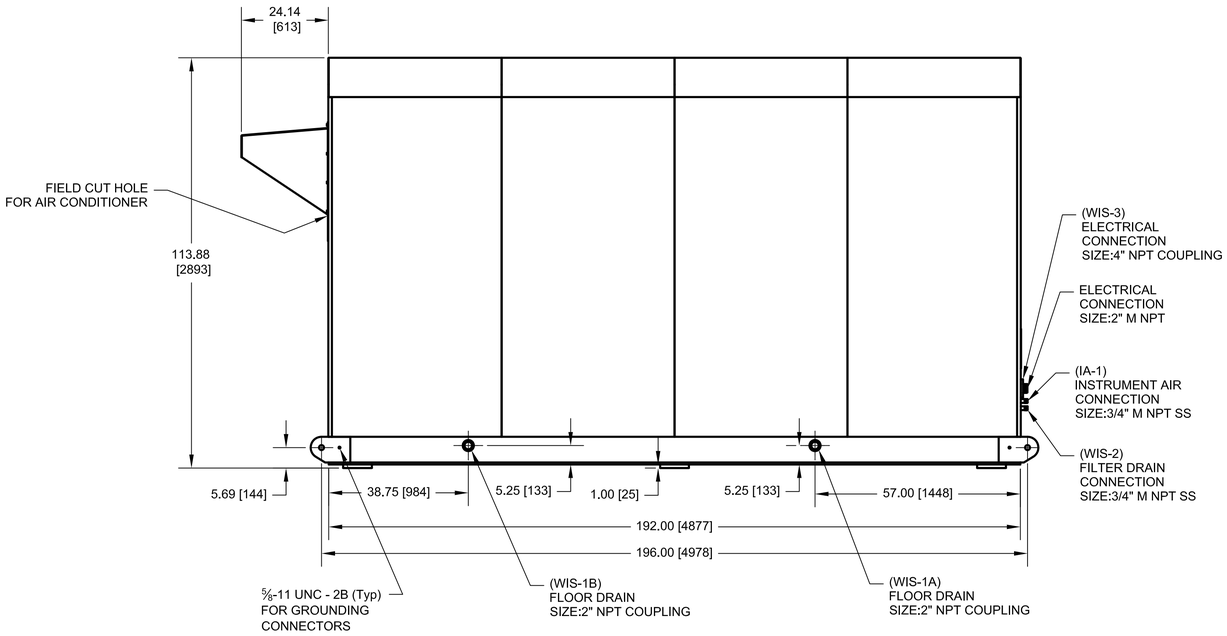

BACK VIEW

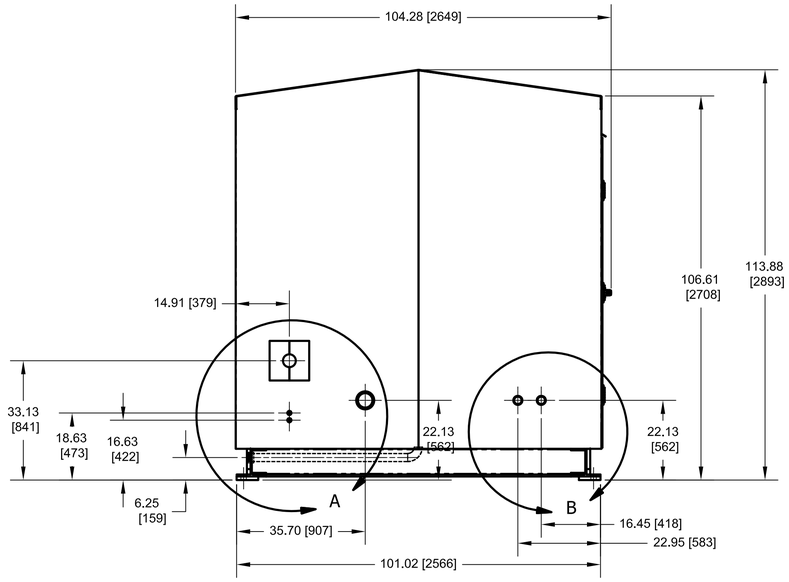

END VIEW

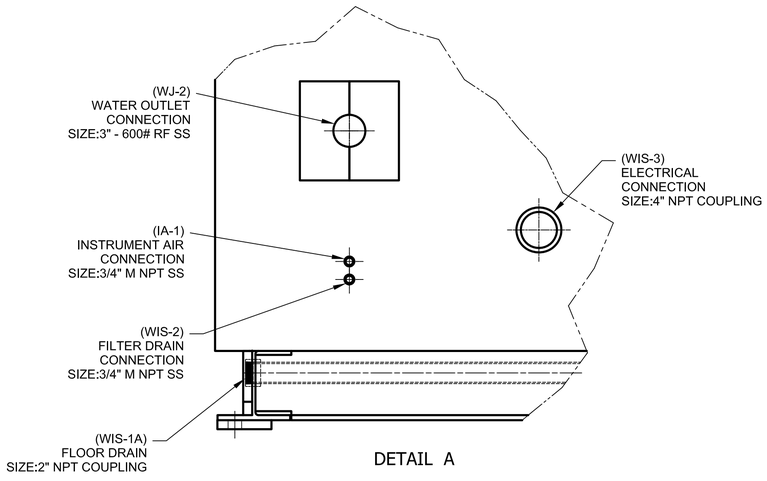

DETAIL A

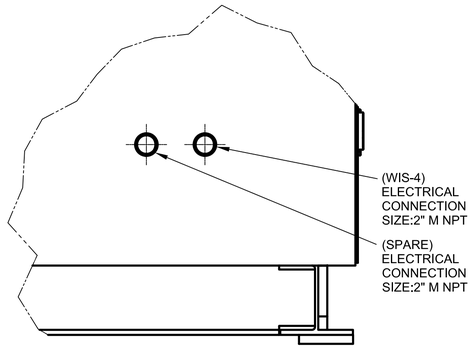

DETAIL B

N° DE DOCUMENTO	DESCRIPCIÓN	REV.	FECHA
AGM-02-0204-PLA-P-0047	DEMIN WATER FORWARDING INJECTION SYSTEM PID		
AGM-02-0204-PLA-G-0061	INTERCONNECTION POINTS		
AGM-02-0204-PLA-G-0057	PLOT PLAN		
AGM-02-0204-PLA-M-0073	MECHANICAL OUTLINE – GAS TURBINE GENERATOR		

DOCUMENTOS DE REFERENCIA

REV.	FECHA	REVISIONES O MODIFICACIONES	DIBUJO	REVISO	APROBO
2	13/07/11	ISSUED FOR CONSTRUCTION	SAB	CB	TK
1	24/05/11	REVISED PER INELMECA COMMENTS	SAB	CB	TK
0	10/03/11	ISSUED FOR FABRICATION	SAB	CB	TK

REF. FABRICANTE		
REF. FABRICANTE	FABRICANTE	O/C:

DERWICK ASSOCIATES CORP. | ProEnergy SERVICES | CORPOELEC CORPORACIÓN ELÉCTRICA NACIONAL | La Electricidad de Caracas | GERENCIA FUNCIONAL DE INGENIERÍA Y PROYECTOS | SENECA

AMPLIACIÓN DE LA CAPACIDAD DE GENERACIÓN Y TRANSPORTE DE ELECTRICIDAD EN LA ISLA DE MARGARITA

PLANO N°: 409-2956-1 | REV:

WATER INJECTION SKID
UNITS 298034 & 298035
GENERAL ARRANGEMENT (X-0405A & X-0405B)

CALCULO:	PROYECTO:	ESCALA: 1:20	PLANO No: AGM-02-0204-PLA-M-0041
REVISADO: C. Brown	CALCULO:	FECHA: 13/07/11	
DIBUJO: S. Boerckel	REVISADO: J. Castillo	DISK. N°	
APROBADO: T. Koontz	DIBUJO:	ESC./PLOTEO:	PAGINA: 2 DE: 2 — REV. 2
ARCHIVO:	APROBADO: M. Monticelli	ARCHIVO:	

F_A1_11 – 841x594mm

LINEA DE CORTE DE COPIA
LINEA DE CORTE DE ORIGINAL

LINEA DE CORTE DE ORIGINAL
LINEA DE CORTE DE COPIA

N°. PLANO: AGM-02-0204-PLA-M-0044 | 0

IMPORTANTE

ESTE PLANO FUE ELABORADO EN AUTOCAD V.2008
CUALQUIER MODIFICACION REALIZADA EN CAMPO DEBERA SER NOTIFICADO A LA UNIDAD RESPONSABLE.
QUEDA PROHIBIDO CORREGIR ESTE PLANO SIN AUTORIZACION DE ESTA UNIDAD.

ALL DIMENSIONS IN BRACKETS [ ] ARE MILLIMETER, EXPRESSED DIMENSIONS ARE INCHES

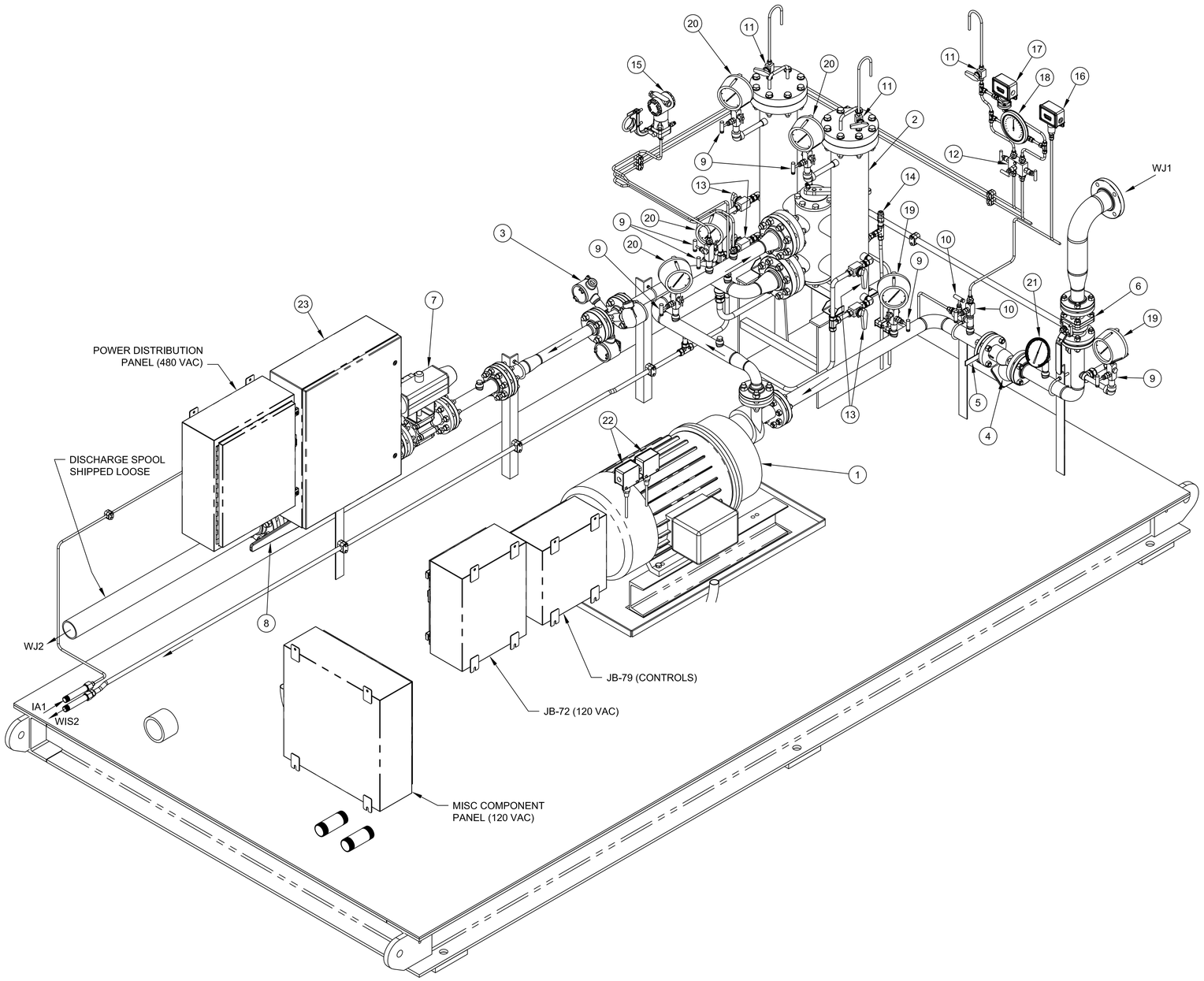

ISOMETRIC VIEW
ENCLOSURE OMITTED FOR CLARITY

PARTS LIST

ITEM	QTY	TAG No	DEVICE No	DESCRIPTION	VENDOR/MODEL
1	1	PW1-1	PW1-1 23WN-1 88WN-1 96WN-4	SUNDYNE/SUNFLO P-2000 PUMP MOTOR (2"x1-1/2" 600# RF) ASSEMBLY w/BALDOR 60HP MOTOR	SUN-FLO / P25-FCT
2	1 2	FW1-1	FW1-1 FW2-2	DUPLEX FILTER w/TRANSFER VALVE (3"x600# RF) FILTER CARTRIDGE	HILLIARD / 52HMF-46900230 HILLIARD / PH520-01-CG
3	1	FM-1	FM-1 96WF-1 96WF-2 96WF-3	FLOW METER (1-1/2"x600# RF)	FLOW TECHNOLOGY / FT-24C3XWRLEGTT026
4	1	FW1-2		Y-STRAINER 80-MESH (2"x150# RF)	MUELLER
5	1	FW1-3		CONE STRAINER	FABOTECH / BS600CS
6	1	WIGV-1		INLET BALL VALVE (3"x150# RF)	FLOWTECH / 53337
7	1	20WN-1	20WN-1	STOP VALVE-PNEUMATIC ACTUATED (2"x600# RF)	CR-TEC
8	1	WIGV-2		OUTLET BALL VALVE (3"x600# RF)	FLOWTECH / 53365
9	7	WIGV-6A WIGV-6B WIGV-6C WIGV-6D WIGV-6E WIGV-6F WIGV-6G		GAUGE NEEDLE VALVE	SWAGELOK / SS-5PDGM8-F8
10	2	WIGV-5A WIGV-5B		INLET PRESSURE SWITCH NEEDLE VALVE	SWAGELOK / SS-5PDM8-F8
11	3	WIGV-8A WIGV-8B WIGV-8C		DUPLEX FILTER VENT BALL VALVE DUPLEX FILTER VENT BALL VALVE DIFFERENTIAL PRESSURE GAUGE VENT BALL VALVE	SWAGELOK / SS-45S8
12	1	WIGV-3		DIFFERENTIAL PRESSURE GAUGE NEEDLE VALVE	SWAGELOK / SS-V3NBF8
13	4	WIGV-7A WIGV-7B WIGV-7C WIGV-7D		DUPLEX FILTER DRAIN BALL VALVE	SWAGELOK / SS-45S12
14	2	WIGV-10A WIGV-10B		DUPLEX FILTER PRESSURE RELIEF VALVE	SWAGELOK / SS-RL458
15	1	96WP-1	96WP-1	DISCHARGE PRESSURE TRANSMITTER	ROSEMOUNT / 3051CG5A22A1AB4Q4
16	1	63WN-1	63WN-1	INLET PRESSURE SWITCH	SOR / 56NN-AF216-M4-C1A
17	1	63WN-3	63WN-3	DIFFERENTIAL PRESSURE SWITCH	SOR / 101NN-AF3-M4-C1A
18	1	WIG-4		DIFFERENTIAL PRESSURE GAUGE 0-10PSIG [0-69kPa]	MID-WEST / 120SC-12-00
19	2	WIG-1A WIG-1B		PRESSURE GAUGE 0-100PSIG [0-689kPa]	WIKA / 9837760
20	4	WIG-3A WIG-3B WIG-3C WIG-3D		PRESSURE GAUGE 0-1000PSIG [0-6895kPa]	WIKA / 938066
21	1	WIG-2		TEMPERATURE GAUGE 0-250°F [0-121°C]	WIKA / 95420D006G4
22	2	26JS-1 26JS-2	26JS-1 26JS-2	TEMPERATURE SWITCH - HL TEMPERATURE SWITCH - HH	SOR / 201NN-AF125-U9-C7A
23	1	97WN-1	97WN-1	VARIABLE FREQUENCY CONTROLLER	FUJI / FRN003G113-4UX

N° DE DOCUMENTO	DESCRIPCIÓN	REV.	FECHA
AGM-02-0204-PLA-I-0046	DEVICE SUMMARY		
AGM-02-0204-PLA-M-0041	WATER INJECTION SKID - GENERAL ARRANGEMENT		

DOCUMENTOS DE REFERENCIA

REV.	FECHA	REVISIONES O MODIFICACIONES	DIBUJO	REVISO	APROBO
0	11/08/11	ISSUED FOR CONSTRUCTION	SAB	CB	TK

REF. FABRICANTE		
REF. FABRICANTE	FABRICANTE	O/C:

DERWICK ASSOCIATES CORP. | ProEnergy SERVICES | CORPOELEC CORPORACIÓN ELÉCTRICA NACIONAL | La Electricidad de Caracas | GERENCIA FUNCIONAL DE INGENIERIA Y PROYECTOS | SENECA

AMPLIACIÓN DE LA CAPACIDAD DE GENERACIÓN Y TRANSPORTE DE ELECTRICIDAD EN LA ISLA DE MARGARITA

WATER INJECTION SKID
DUAL FUEL MOD. UNITS 298034 & 298035
(MECHANICAL)

PLANO N°:	REV:		
PROYECTO N°: 409-2956-1			
CALCULO:	PROYECTO:	ESCALA: 1:10	PLANO No: AGM-02-0204-PLA-M-0044
REVISADO: C. Brown	CALCULO:	FECHA: 11/08/11	
DIBUJO: S. Boerckel	REVISADO: J. Castillo	DISK. N°	
APROBADO: T. Koontz	DIBUJO:	ESC./PLOTEO:	
ARCHIVO:	APROBADO: M. Monticelli	ARCHIVO:	PAGINA: 1 DE: 4 REV. 0

F_A1_11 - 841x594mm

LINEA DE CORTE DE COPIA
LINEA DE CORTE DE ORIGINAL

LINEA DE CORTE DE ORIGINAL
LINEA DE CORTE DE COPIA

N° PLANO: AGM-02-0204-PLA-M-0044 | 0

IMPORTANTE

ESTE PLANO FUE ELABORADO EN AUTOCAD V.2008
CUALQUIER MODIFICACION REALIZADA EN CAMPO
DEBERA SER NOTIFICADO A LA UNIDAD
RESPONSABLE.
QUEDA PROHIBIDO CORREGIR ESTE PLANO SIN
AUTORIZACION DE ESTA UNIDAD.

ALL DIMENSIONS IN BRACKETS [ ] ARE MILLIMETER, EXPRESSED DIMENSIONS ARE INCHES

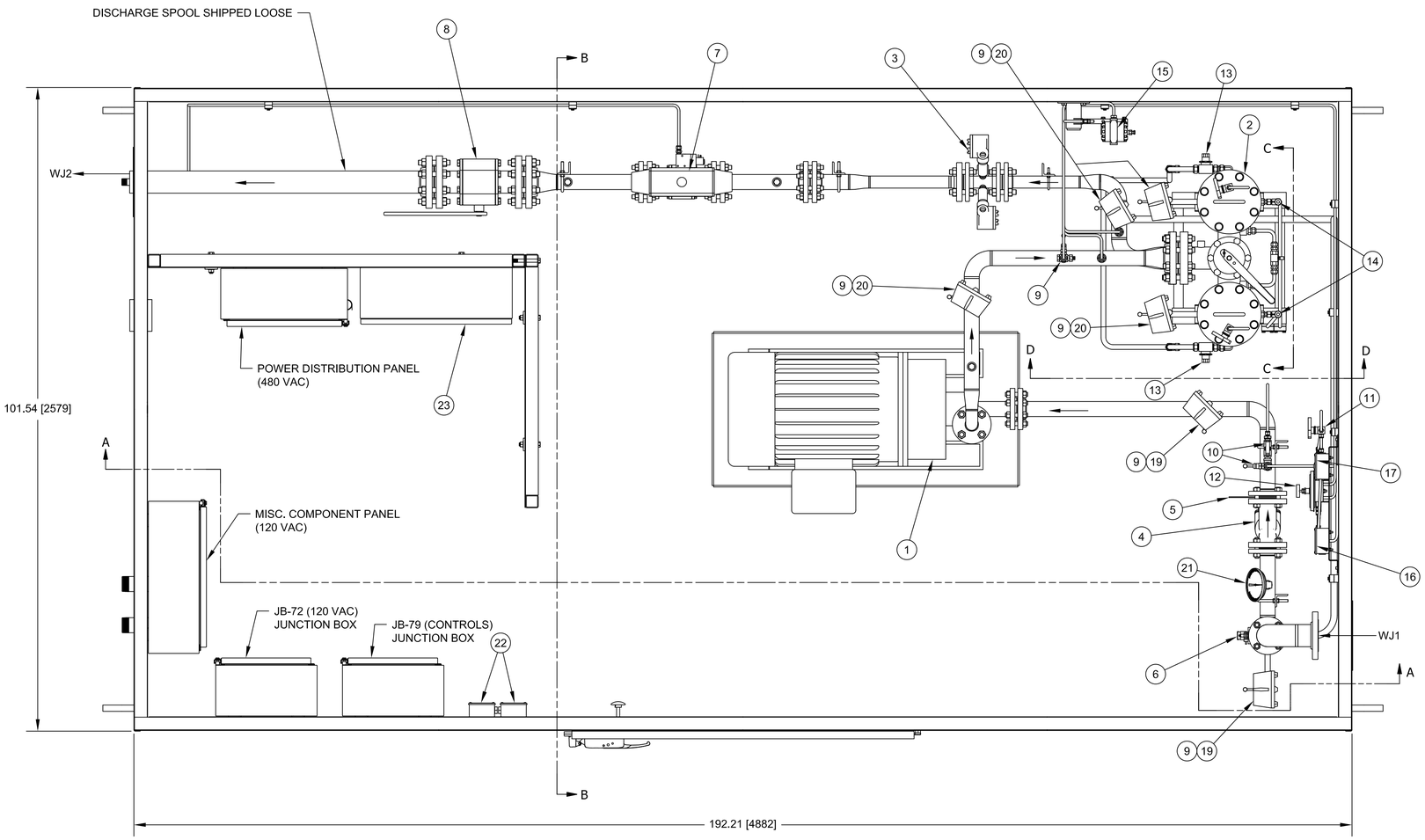

N° DE DOCUMENTO	DESCRIPCIÓN	REV.	FECHA
AGM-02-0204-PLA-I-0046	DEVICE SUMMARY		
AGM-02-0204-PLA-M-0041	WATER INJECTION SKID – GENERAL ARRANGEMENT		

DOCUMENTOS DE REFERENCIA

REV.	FECHA	REVISIONES O MODIFICACIONES	DIBUJO	REVISO	APROBO
0	11/08/11	ISSUED FOR CONSTRUCTION	SAB	CB	TK

REF. FABRICANTE		
REF. FABRICANTE	FABRICANTE	O/C:

DERWICK Associates Corp. | ProEnergy SERVICES | CORPOELEC | La Electricidad de Caracas | GERENCIA FUNCIONAL DE INGENIERIA Y PROYECTOS | SENECA

AMPLIACIÓN DE LA CAPACIDAD DE GENERACIÓN Y TRANSPORTE DE ELECTRICIDAD EN LA ISLA DE MARGARITA

WATER INJECTION SKID
DUAL FUEL MOD. UNITS 298034 & 298035
(MECHANICAL)

PLANO N°:	REV:		
PROYECTO N°: 409-2956-1			
CALCULO:	PROYECTO:	ESCALA: 1:10	PLANO No: AGM-02-0204-PLA-M-0044
REVISADO: C. Brown	CALCULO:	FECHA: 11/08/11	
DIBUJO: S. Boerckel	REVISADO: J. Castillo	DISK. N°	
APROBADO: T. Koontz	DIBUJO:	ESC./PLOTEO:	
ARCHIVO:	APROBADO: M. Monticelli	ARCHIVO:	PAGINA: 2 DE: 4 — REV. 0

F_A1_11 – 841x594mm

LINEA DE CORTE DE COPIA
LINEA DE CORTE DE ORIGINAL

LINEA DE CORTE DE ORIGINAL
LINEA DE CORTE DE COPIA

N° PLANO: AGM-02-0204-PLA-M-0044 | 0

IMPORTANTE

ESTE PLANO FUE ELABORADO EN AUTOCAD V.2008
CUALQUIER MODIFICACION REALIZADA EN CAMPO DEBERA SER NOTIFICADO A LA UNIDAD RESPONSABLE.
QUEDA PROHIBIDO CORREGIR ESTE PLANO SIN AUTORIZACION DE ESTA UNIDAD.

ALL DIMENSIONS IN BRACKETS [ ] ARE MILLIMETER; EXPRESSED DIMENSIONS ARE INCHES

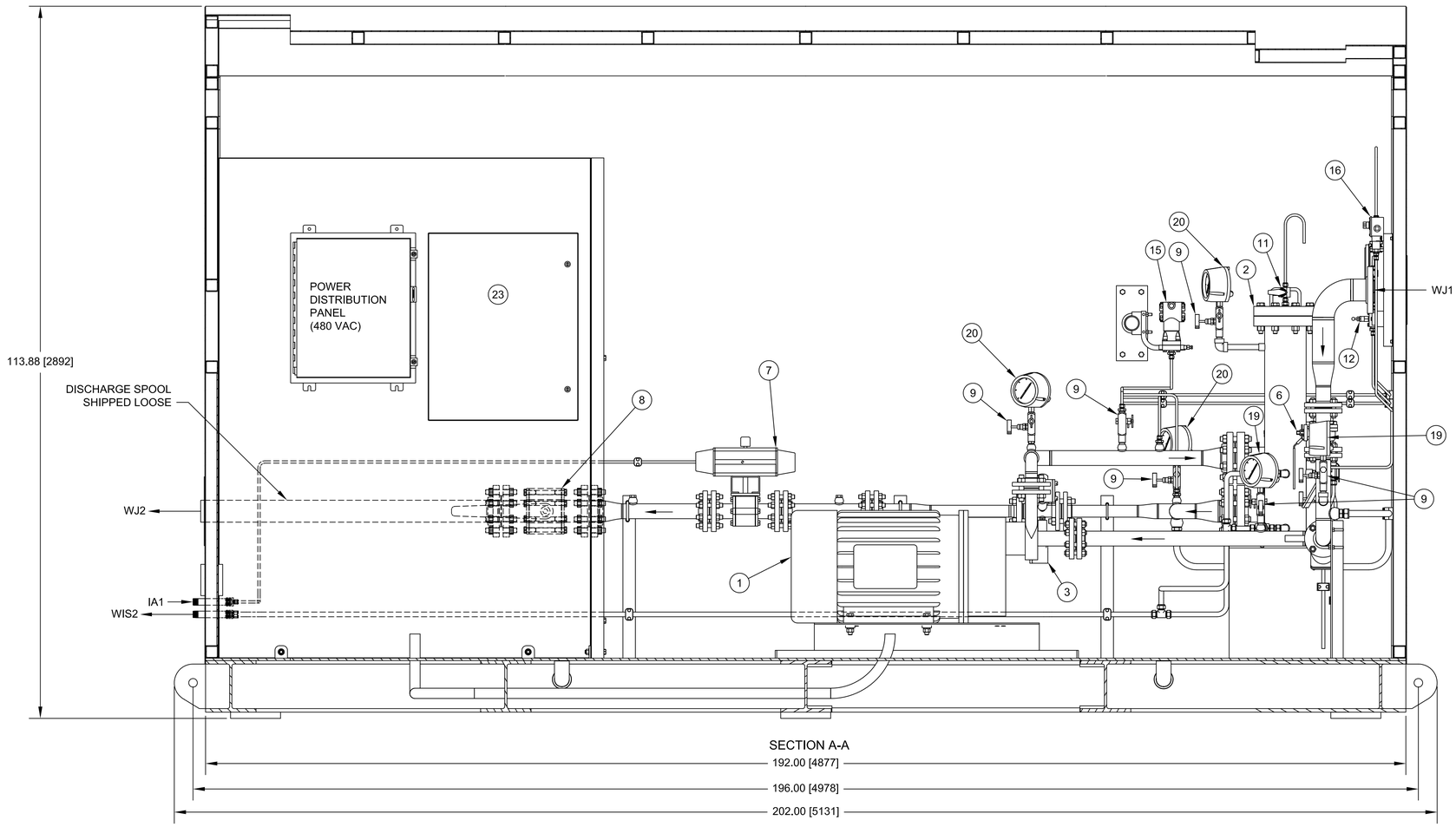

SECTION A-A

N° DE DOCUMENTO	DESCRIPCIÓN	REV.	FECHA
AGM-02-0204-PLA-I-0046	DEVICE SUMMARY		
AGM-02-0204-PLA-M-0041	WATER INJECTION SKID – GENERAL ARRANGEMENT		

DOCUMENTOS DE REFERENCIA

REV.	FECHA	REVISIONES O MODIFICACIONES	DIBUJO	REVISO	APROBO
0	11/08/11	ISSUED FOR CONSTRUCTION	SAB	CB	TK

REF. FABRICANTE		
REF. FABRICANTE	FABRICANTE	O/C:

DERWICK Engineering Associates Corp. | ProEnergy SERVICES | CORPOELEC | La Electricidad de Caracas | GERENCIA FUNCIONAL DE INGENIERIA Y PROYECTOS | SENECA

AMPLIACIÓN DE LA CAPACIDAD DE GENERACIÓN Y TRANSPORTE DE ELECTRICIDAD EN LA ISLA DE MARGARITA

WATER INJECTION SKID
DUAL FUEL MOD. UNITS 298034 & 298035
(MECHANICAL)

PLANO N°:	REV:		
PROYECTO N°: 409-2956-1			
CALCULO:	PROYECTO:	ESCALA: 1:10	PLANO No: AGM-02-0204-PLA-M-0044
REVISADO: C. Brown	CALCULO:	FECHA: 11/08/11	
DIBUJO: S. Boerckel	REVISADO: J. Castillo	DISK. N°	
APROBADO: T. Koontz	DIBUJO:	ESC./PLOTEO:	
ARCHIVO:	APROBADO: M. Monticelli	ARCHIVO:	PAGINA: 3 DE: 4 REV. 0

F_A1_11 – 841x594mm

LINEA DE CORTE DE COPIA
LINEA DE CORTE DE ORIGINAL

LINEA DE CORTE DE ORIGINAL
LINEA DE CORTE DE COPIA

N° PLANO: AGM-02-0204-PLA-M-0044 | 0

I M P O R T A N T E

ESTE PLANO FUE ELABORADO EN AUTOCAD V.2008
CUALQUIER MODIFICACION REALIZADA EN CAMPO DEBERA SER NOTIFICADO A LA UNIDAD RESPONSABLE.
QUEDA PROHIBIDO CORREGIR ESTE PLANO SIN AUTORIZACION DE ESTA UNIDAD.

ALL DIMENSIONS IN BRACKETS [ ] ARE MILLIMETER, EXPRESSED DIMENSIONS ARE INCHES

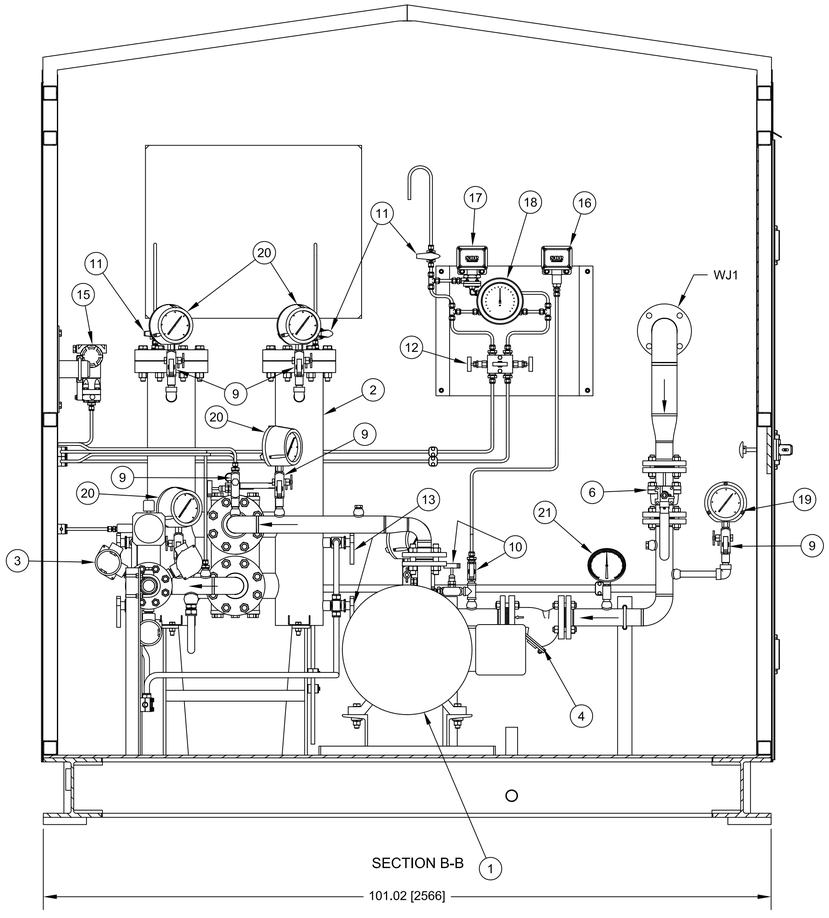

SECTION B-B

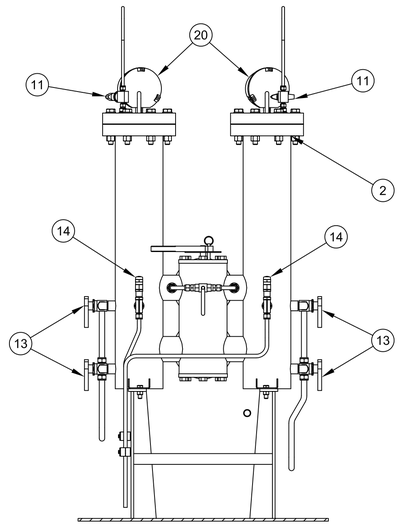

SECTION C-C

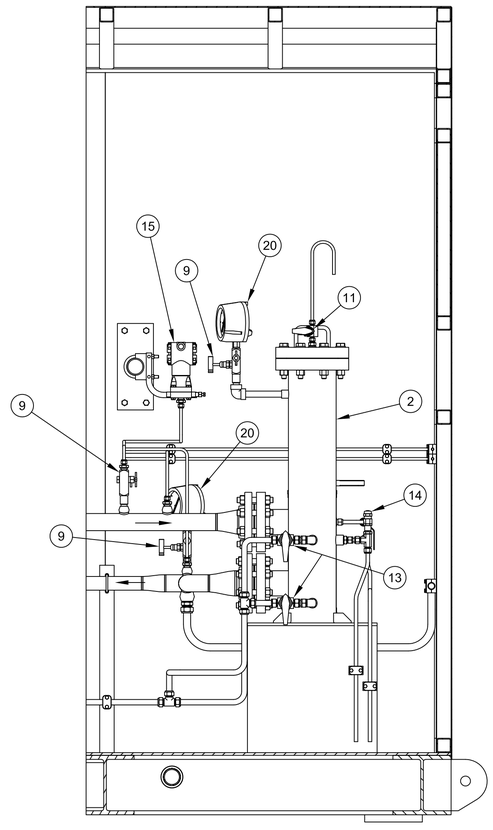

SECTION D-D

N° DE DOCUMENTO	DESCRIPCIÓN	REV.	FECHA
AGM-02-0204-PLA-I-0046	DEVICE SUMMARY		
AGM-02-0204-PLA-M-0041	WATER INJECTION SKID – GENERAL ARRANGEMENT		

DOCUMENTOS DE REFERENCIA

REV.	FECHA	REVISIONES O MODIFICACIONES	DIBUJO	REVISO	APROBO
0	11/08/11	ISSUED FOR CONSTRUCTION	SAB	CB	TK

REF. FABRICANTE	FABRICANTE	O/C:
REF. FABRICANTE		

DERWICK ASSOCIATES CORP. | ProEnergy SERVICES | CORPOELEC CORPORACIÓN ELÉCTRICA NACIONAL | La Electricidad de Caracas | GERENCIA FUNCIONAL DE INGENIERÍA Y PROYECTOS | SENECA

AMPLIACIÓN DE LA CAPACIDAD DE GENERACIÓN Y TRANSPORTE DE ELECTRICIDAD EN LA ISLA DE MARGARITA

WATER INJECTION SKID
DUAL FUEL MOD. UNITS 298034 & 298035
(MECHANICAL)

PLANO N°:	REV:		
PROYECTO N°: 409-2956-1			
CALCULO:	PROYECTO:	ESCALA: 1:10	PLANO No: AGM-02-0204-PLA-M-0044
REVISADO: C. Brown	CALCULO:	FECHA: 11/08/11	
DIBUJO: S. Boerckel	REVISADO: J. Castillo	DISK. N°	
APROBADO: T. Koontz	DIBUJO:	ESC./PLOTEO:	REV. 0
ARCHIVO:	APROBADO: M. Monticelli	ARCHIVO:	PAGINA: 4 DE: 4

F_A1_11 – 841x594mm

LINEA DE CORTE DE COPIA
LINEA DE CORTE DE ORIGINAL

LINEA DE CORTE DE ORIGINAL
LINEA DE CORTE DE COPIA

0	N° PLANO: AGM-02-0204-PLA-M-0045

NOTES:
1. ALL MATERIAL FOR CARBON STEEL TUBING SHALL BE ASTM A554, WELDED ASTM A249, SEAMLESS ASTM A269, PLATE ASTM A36 UNLESS OTHERWISE STATED. SHAPES SHALL CONFORM TO ASTM A276.
2. SYSTEM PARAMETERS AND SPECIFICATIONS ARE BASED ON TYPICAL REQUIREMENTS FOR 7EA DLN 1.0 DUAL FUEL SYSTEMS AND CUSTOMER SCOPE OF WORK.

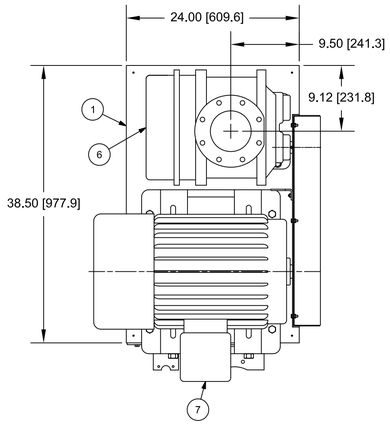

PARTS LIST			
ITEM	QTY	DESCRIPTION	VENDOR/PART No
1	1	BASE FRAME	Pro Energy Services / AABPS40-100
2	1	Q1 x 1-7/8" MST BUSHING	MARTIN / 00568016532
3	1	10L56Q PLOY V-SHEAVE	BROWNING / 20700091-10L56Q
4	1	10L62Q POLY V-SHEAVE	BROWNING / 20700091-10L62Q
5	1	10Vx540 L-POLY V-BELT	JASON / R540L10
6	1	POSITIVE DISPLACEMENT BLOWER	GARDNER DENVER (CYCLBLOWER) / A5CDL9
7	1	40HP-480V-3PH-60HZ-3600RPM MOTOR	SIEMENS / 324TS FRAME MOTOR
8	1	Q1 x 1-5/8" MST BUSHING	MARTIN / 00568016526

I M P O R T A N T E
ESTE PLANO FUE ELABORADO EN AUTOCAD V.2008 CUALQUIER MODIFICACION REALIZADA EN CAMPO DEBERA SER NOTIFICADO A LA UNIDAD RESPONSABLE.
QUEDA PROHIBIDO CORREGIR ESTE PLANO SIN AUTORIZACION DE ESTA UNIDAD.

ALL DIMENSIONS IN BRACKETS [ ] ARE MILLIMETER, EXPRESSED DIMENSIONS ARE INCHES

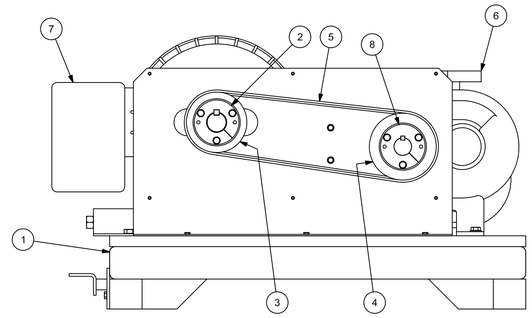

VIEW A-A
ENLARGED

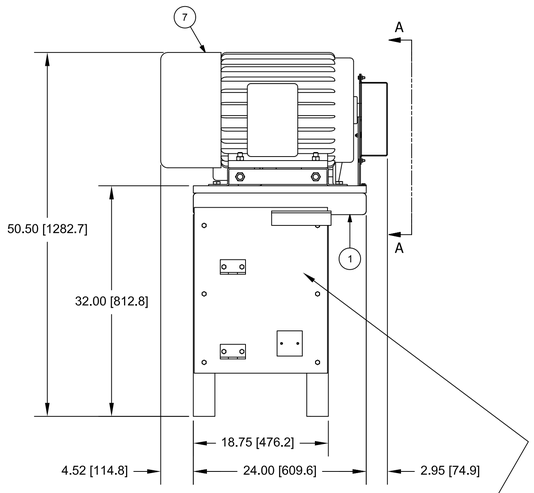

FOR PANEL ASSEMBLY
REFER TO AGM-02-0204-PLA-I-0023

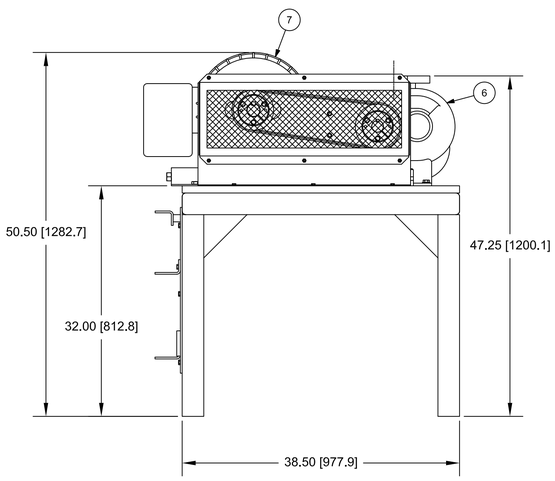

REV.	FECHA	REVISIONES O MODIFICACIONES	DIBUJO	REVISO	APROBO
0	19/07/11	ISSUED FOR FABRICATION	SAB	CB	TK

REF. FABRICANTE		
REF. FABRICANTE	FABRICANTE	O/C:

N° DE DOCUMENTO	DESCRIPCIÓN	REV.	FECHA
AGM-02-0204-PLA-E-0008	ONE LINE DIAGRAM		
AGM-02-0204-PLA-M-0022	ATOMIZING AIR PIPING ARRANGEMENT – ACCESSORY		
AGM-02-0204-PLA-I-0023	ATOMIZING AIR BOOSTER PANEL ARRANGEMENT		

DOCUMENTOS DE REFERENCIA

DERWICK ASSOCIATES CORP. / ProEnergy SERVICES / CORPOELEC CORPORACIÓN ELÉCTRICA NACIONAL / La Electricidad de Caracas / GERENCIA FUNCIONAL DE INGENIERÍA Y PROYECTOS / SENECA

AMPLIACIÓN DE LA CAPACIDAD DE GENERACIÓN Y TRANSPORTE DE ELECTRICIDAD EN LA ISLA DE MARGARITA

40HP ATOMIZING AIR BOOSTER PUMP STAND DUAL FUEL MOD. UNITS 298034 & 298035 (ASSEMBLY)

PLANO N°: | REV:
PROYECTO N°: 409-2956-1

CALCULO:	PROYECTO:	ESCALA: 1:10	PLANO No: AGM-02-0204-PLA-M-0045
REVISADO: C. Brown	CALCULO:	FECHA: 19/07/11	
DIBUJO: S. Boerckel	REVISADO: J. Castillo	DISK. N°	
APROBADO: T. Koontz	DIBUJO:	ESC./PLOTEO:	
ARCHIVO:	APROBADO: M. Monticelli	ARCHIVO:	PAGINA: 1 DE: 1 REV. 0

F_A1_11 – 841x594mm

LINEA DE CORTE DE COPIA
LINEA DE CORTE DE ORIGINAL

LINEA DE CORTE DE ORIGINAL
LINEA DE CORTE DE COPIA

1	N° PLANO: AGM-02-0204-PLA-M-0075

NOTES:

1. PIPE SUPPORTS PRIVIDED BY INSTALLER.
2. OUTLET TO BE NEAR ACCESSORY BASE.
3. FOR PROCESS SPECIFICATIONS REFER TO AGM-02-0204-PLA-P-0048 LIQUID FUEL P&ID.
4. ASSEMBLED WEIGHT = 772 lbs [350 kg]
5. FOR WIRE NTERCONNECTION REFER TO AGM-02-0204-PLA-G-0058 INTERCONNECTION WIRING DIAGRAM & AGM-02-0204-PLA-E-0006 (CABLE SUMMARY).
6. FOR INSTRUMENT SET POINTS REFER TO AGM-02-0204-PLA-I-0046 (DEVICE SUMMARY)

PARTS LIST

ITEM	QTY	DEVICE No	PART No	DESCRIPTION	VENDOR
1	1	------	SFM7EA-610	GAUGE MOUNT	Pro Energy Services
2	1	------	SFM7EA-710	STOP VALVE INLET SPOOL	Pro Energy Services
3	1	------	SFM7EA-720	PRESSURE VALVE INLET SPOOL	Pro Energy Services
4	1	------	SFM7EA-730	PRESSURE VALVE DISCHARGE SPOOL	Pro Energy Services
5	1	------	SFM7EA-740	DISCHARGE SPOOL	Pro Energy Services
6	1	------	SFM7EA-750	BY-PASS SPOOL ASSEMBLY	Pro Energy Services
7	2	------	SFM7EA-760	FLOW METER INLET/DISCHARGE SPOOL	Pro Energy Services
8	1	20FD-1	CRC733F-3F	CR-TEC ACTUATED STOP VALVE - FAIL SAFE (3"x150 RF-CS)	CR-TEC
9	1	------	781-CS	Y-STRAINER 80MESH (3"x150 RF-CAST SS)	MUELLER
10	1	VPR53-3	FS1098-472/150RF2/L/WS1	PRESSURE REDUCING REGULATOR VALVE (2"x150 RF-CS	FISCHER
11	2	------	B5110-02-F02-13/HL	HIGH PERFORMANCE BUTTERFLY VALVE (3"x150)	CAMRON
12	1	95FM-1 FM4-1	B070ACAAAACDAEA	FLOWMETER MODEL B-72D 425GPM (3"x150 RF-CS)	BRODIE METER CO
13	1	------	SS-V3NBF8	3-WAY VALVE (1/2" FNPT)	SWAGELOK
14	1	------	SS-V2NBF8	2-WAY BLOCK & BLEED VALVE (1/2" FNPT)	SWAGELOK
15	1	------	M5VDC-44	GAUGE VALVE (1/2" NPT)	ANDERSON GREENWOOD & CROSBY
16	1	------	V6VDC-4	GAUGE VALVE (1/2" NPT)	ANDERSON GREENWOOD & CROSBY
17	1	63FD-3	6611G8007	DUAL SNAP PRESSURE SWITCH (1/4" MNPT)	CCS
18	2	------	SGL-G052N	PRESSURE GAUGE (0-100 PSI)	DWYER INSTRUMENTS
19	1	63FD-2	120-SC-12	DIFFERENTIAL PRESSURE GAUGE w/SWITCH (0-10 PSID)	MID-WEST INSTRUMENT
20	1	------	SS-A65TF12	FIRE SAFE BALL VALVE - SS (3/4" FNPT)	SWAGELOK

IMPORTANTE

ESTE PLANO FUE ELABORADO EN AUTOCAD V.2008
CUALQUIER MODIFICACION REALIZADA EN CAMPO DEBERA SER NOTIFICADO A LA UNIDAD RESPONSABLE.
QUEDA PROHIBIDO CORREGIR ESTE PLANO SIN AUTORIZACION DE ESTA UNIDAD.

ALL DIMENSIONS IN BRACKETS [ ] ARE MILLIMETER, EXPRESSED DIMENSIONS ARE INCHES

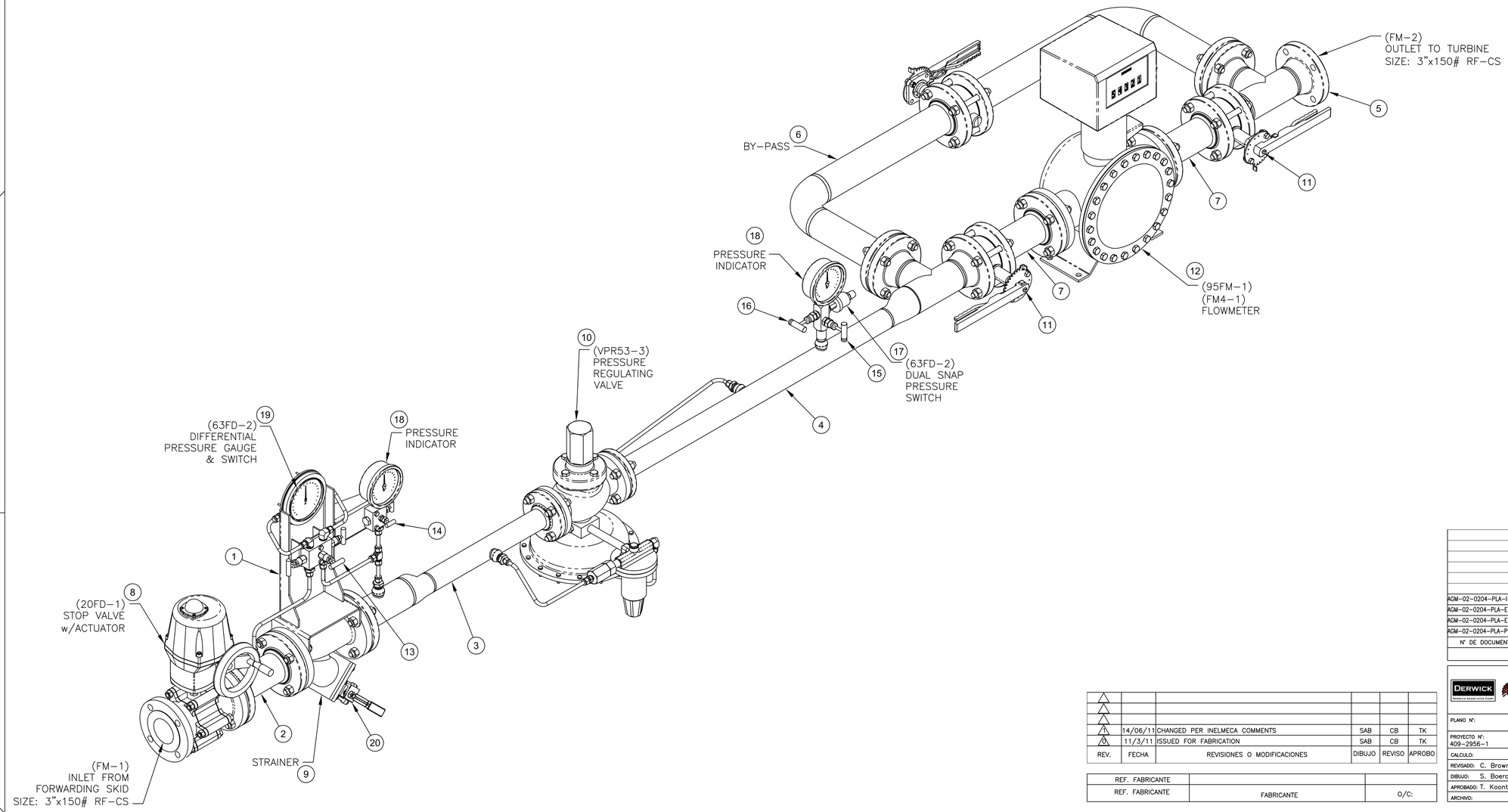

AGM-02-0204-PLA-I-0046	DEVICE SUMMARY		
AGM-02-0204-PLA-E-0006	CABLE SUMMARY		
AGM-02-0204-PLA-E-0058	INTERCONNECTION WIRING DIAGRAM		
AGM-02-0204-PLA-P-0048	LIQUID FUEL SYSTEM P&ID		
N° DE DOCUMENTO	DESCRIPCIÓN	REV.	FECHA

DOCUMENTOS DE REFERENCIA

REV.	FECHA	REVISIONES O MODIFICACIONES	DIBUJO	REVISO	APROBO
1	14/06/11	CHANGED PER INELMECA COMMENTS	SAB	CB	TK
0	11/3/11	ISSUED FOR FABRICATION	SAB	CB	TK

REF. FABRICANTE		
REF. FABRICANTE	FABRICANTE	O/C:

DERWICK / ProEnergy SERVICES / CORPOELEC / La Electricidad de Caracas / SENECA

AMPLIACIÓN DE LA CAPACIDAD DE GENERACIÓN Y TRANSPORTE DE ELECTRICIDAD EN LA ISLA DE MARGARITA

FUEL MANAGEMENT
DUAL FUEL MOD. UNITS 298034 & 298035
(MECHANICAL ARRANGEMENT)

PLANO N°:	REV:		
PROYECTO N°: 409-2956-1			
CALCULO:	PROYECTO:	ESCALA: NONE	PLANO No:
REVISADO: C. Brown	CALCULO:	FECHA: 14/06/11	AGM-02-0204-PLA-M-0075
DIBUJO: S. Boerckel	REVISADO: J. Castillo	DISK. N°	
APROBADO: T. Koontz	DIBUJO:	ESC./PLOTEO:	
ARCHIVO:	APROBADO: M. Monticelli	ARCHIVO:	PAGINA: 1 DE: 2 — REV. 1

F_A1_11 – 841x594mm

LINEA DE CORTE DE COPIA
LINEA DE CORTE DE ORIGINAL

LINEA DE CORTE DE ORIGINAL
LINEA DE CORTE DE COPIA

N° PLANO: AGM-02-0204-PLA-M-0075 (1)

IMPORTANTE

ESTE PLANO FUE ELABORADO EN AUTOCAD V.2008
CUALQUIER MODIFICACION REALIZADA EN CAMPO DEBERA SER NOTIFICADO A LA UNIDAD RESPONSABLE.
QUEDA PROHIBIDO CORREGIR ESTE PLANO SIN AUTORIZACION DE ESTA UNIDAD.

ALL DIMENSIONS IN BRACKETS [ ] ARE MILLIMETER; EXPRESSED DIMENSIONS ARE INCHES

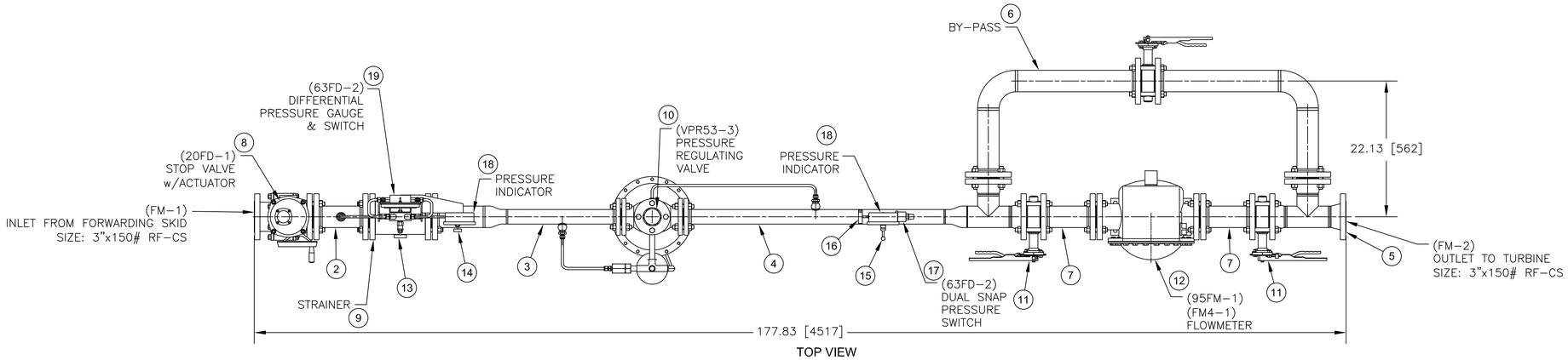

TOP VIEW

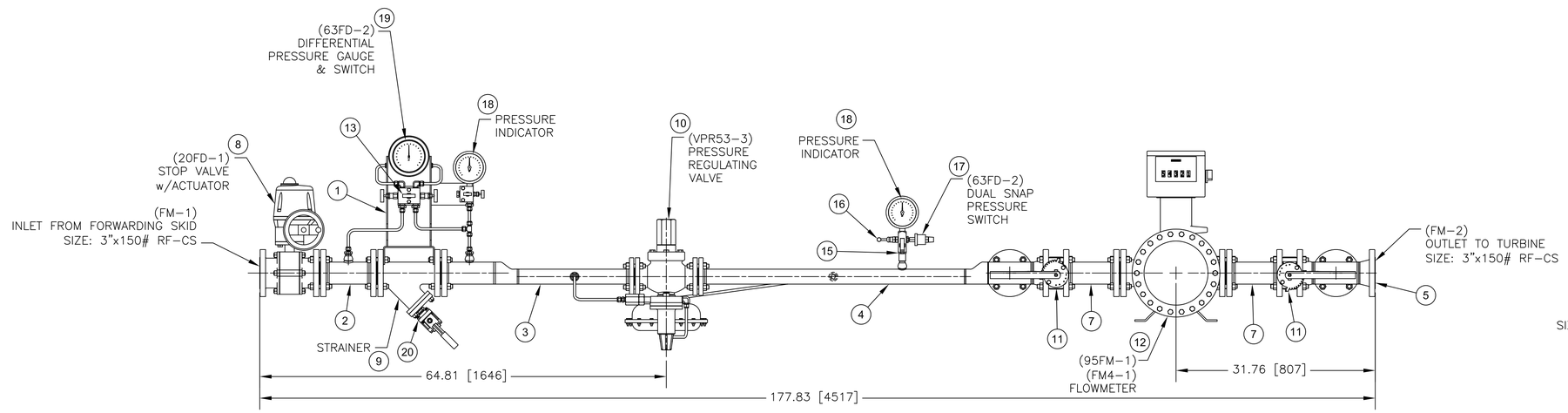

SIDE VIEW

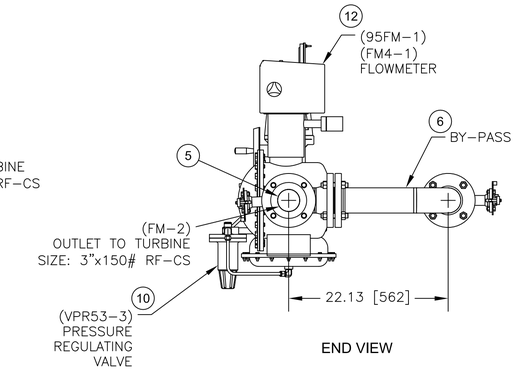

END VIEW

3					
2					
1					
1	14/06/11	CHANGED PER INELMECA COMMENTS	SAB	CB	TK
0	11/3/11	ISSUED FOR FABRICATION	SAB	CB	TK
REV.	FECHA	REVISIONES O MODIFICACIONES	DIBUJO	REVISO	APROBO

REF. FABRICANTE		
REF. FABRICANTE	FABRICANTE	O/C:

AGM-02-0204-PLA-I-0046	DEVICE SUMMARY		
AGM-02-0204-PLA-E-0006	CABLE SUMMARY		
AGM-02-0204-PLA-E-0058	INTERCONNECTION WIRING DIAGRAM		
AGM-02-0204-PLA-P-0048	LIQUID FUEL SYSTEM P&ID		
N° DE DOCUMENTO	DESCRIPCIÓN	REV.	FECHA

DOCUMENTOS DE REFERENCIA

DERWICK · ProEnergy SERVICES · CORPOELEC · La Electricidad de Caracas · GERENCIA FUNCIONAL DE INGENIERÍA Y PROYECTOS · SENECA

AMPLIACIÓN DE LA CAPACIDAD DE GENERACIÓN Y TRANSPORTE DE ELECTRICIDAD EN LA ISLA DE MARGARITA

FUEL MANAGEMENT
DUAL FUEL MOD. UNITS 298034 & 298035
(MECHANICAL ARRANGEMENT)

PLANO N°:	REV:		
PROYECTO N°: 409-2956-1			
CALCULO:	PROYECTO:	ESCALA: 1:10	PLANO No: AGM-02-0204-PLA-M-0075
REVISADO: C. Brown	CALCULO:	FECHA: 14/06/11	
DIBUJO: S. Boerckel	REVISADO: J. Castillo	DISK. N°	
APROBADO: T. Koontz	DIBUJO:	ESC./PLOTEO:	
ARCHIVO:	APROBADO: M. Monticelli	ARCHIVO:	PAGINA: 2 DE: 2 — REV. 1

F_A1_11 – 841x594mm

LINEA DE CORTE DE COPIA
LINEA DE CORTE DE ORIGINAL

LINEA DE CORTE DE ORIGINAL
LINEA DE CORTE DE COPIA

N° PLANO: AGM-02-0204-PLA-M-0075 | 2

NOTES:

1. PIPE SUPPORTS PRIVIDED BY INSTALLER.
2. OUTLET TO BE NEAR ACCESSORY BASE.
3. FOR PROCESS SPECIFICATIONS REFER TO AGM-02-0204-PLA-P-0048 LIQUID FUEL P&ID.
4. ASSEMBLED WEIGHT = 772 lbs [350 kg]
5. FOR WIRE NTERCONNECTION REFER TO AGM-02-0204-PLA-G-0058 INTERCONNECTION WIRING DIAGRAM & AGM-02-0204-PLA-E-0006 (CABLE SUMMARY).
6. FOR INSTRUMENT SET POINTS REFER TO AGM-02-0204-PLA-I-0046 (DEVICE SUMMARY)

PARTS LIST

ITEM	QTY	DEVICE No	PART No	DESCRIPTION	VENDOR
1	1	------	SFM7EA-610	GAUGE MOUNT	Pro Energy Services
2	1	------	SFM7EA-710	STOP VALVE INLET SPOOL	Pro Energy Services
3	1	------	SFM7EA-720	PRESSURE VALVE INLET SPOOL	Pro Energy Services
4	1	------	SFM7EA-730	PRESSURE VALVE DISCHARGE SPOOL	Pro Energy Services
5	1	------	SFM7EA-740	DISCHARGE SPOOL	Pro Energy Services
6	1	------	SFM7EA-750	BY-PASS SPOOL ASSEMBLY	Pro Energy Services
7	2	------	SFM7EA-760	FLOW METER INLET/DISCHARGE SPOOL	Pro Energy Services
8	1	20FD-1	CRC733F-3F	CR-TEC ACTUATED STOP VALVE - FAIL SAFE (3"x150 RF-CS)	CR-TEC
9	1	------	781-CS	Y-STRAINER 80MESH (3"x150 RF-CAST SS)	MUELLER
10	1	VPR53-3	FS1098-472/150RF2/L/WS1	PRESSURE REDUCING REGULATOR VALVE (2"x150 RF-CS	FISCHER
11	2	------	B5110-02-F02-13/HL	HIGH PERFORMANCE BUTTERFLY VALVE (3"x150)	CAMRON
12	1	95FM-1 FM4-1	B070ACAAAACDAEA	FLOWMETER MODEL B-72D 425GPM (3"x150 RF-CS)	BRODIE METER CO
13	1	------	SS-V3NBF8	3-WAY VALVE (1/2" FNPT)	SWAGELOK
14	1	------	SS-V2NBF8	2-WAY BLOCK & BLEED VALVE (1/2" FNPT)	SWAGELOK
15	1	------	M5VDC-44	GAUGE VALVE (1/2" NPT)	ANDERSON GREENWOOD & CROSBY
16	1	------	V6VDC-4	GAUGE VALVE (1/2" NPT)	ANDERSON GREENWOOD & CROSBY
17	1	63FD-3	6611G8007	DUAL SNAP PRESSURE SWITCH (1/4" MNPT)	CCS
18	2	------	SGL-G052N	PRESSURE GAUGE (0-100 PSI)	DWYER INSTRUMENTS
19	1	63FD-2	120-SC-12	DIFFERENTIAL PRESSURE GAUGE w/SWITCH (0-10 PSID)	MID-WEST INSTRUMENT
20	1	------	SS-A65TF12	FIRE SAFE BALL VALVE - SS (3/4" FNPT)	SWAGELOK

IMPORTANTE

ESTE PLANO FUE ELABORADO EN AUTOCAD V.2008
CUALQUIER MODIFICACION REALIZADA EN CAMPO DEBERA SER NOTIFICADO A LA UNIDAD RESPONSABLE.
QUEDA PROHIBIDO CORREGIR ESTE PLANO SIN AUTORIZACION DE ESTA UNIDAD.

ALL DIMENSIONS IN BRACKETS [ ] ARE MILLIMETER, EXPRESSED DIMENSIONS ARE INCHES

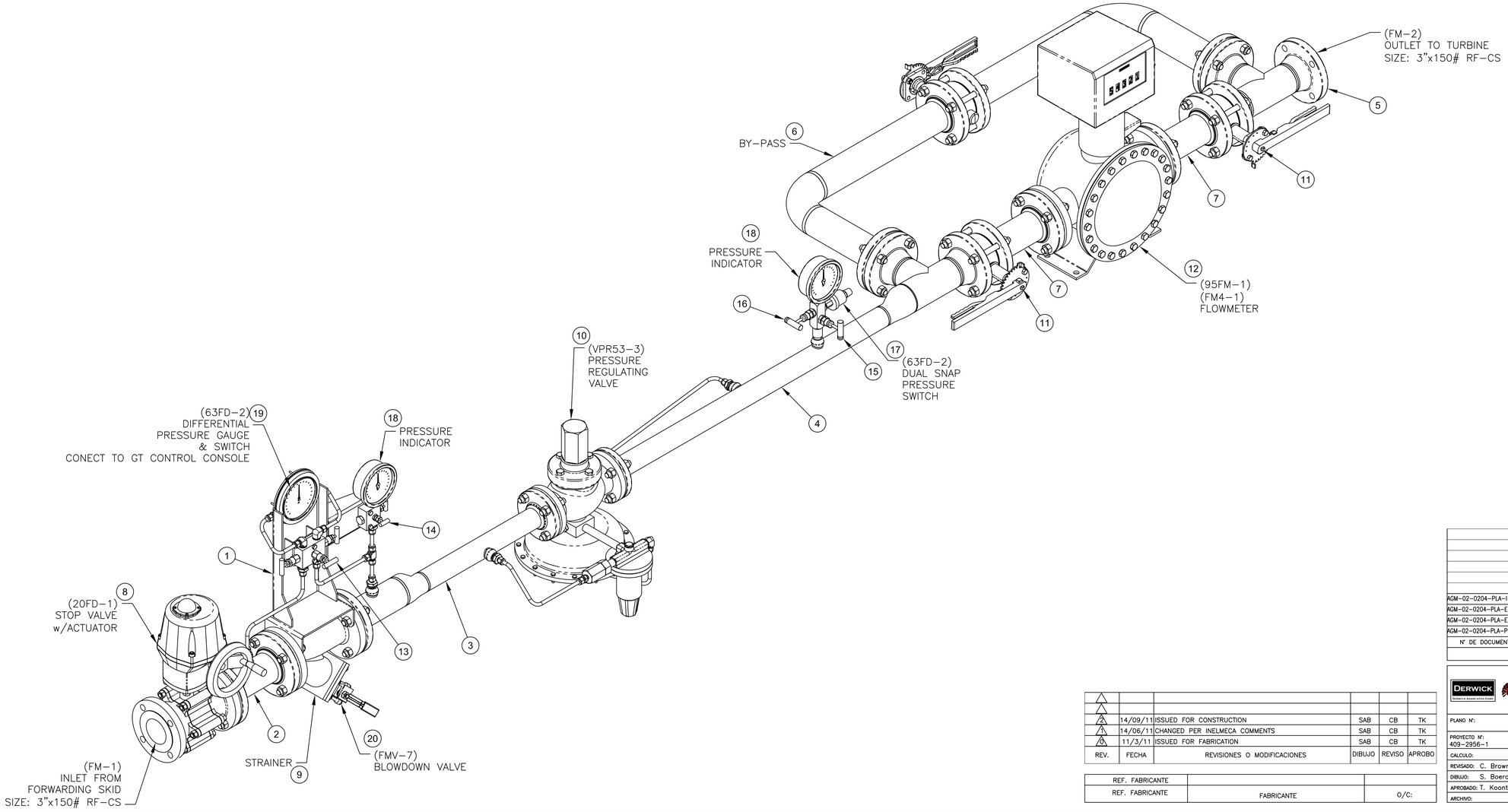

2	14/09/11	ISSUED FOR CONSTRUCTION	SAB	CB	TK
1	14/06/11	CHANGED PER INELMECA COMMENTS	SAB	CB	TK
0	11/3/11	ISSUED FOR FABRICATION	SAB	CB	TK
REV.	FECHA	REVISIONES O MODIFICACIONES	DIBUJO	REVISO	APROBO

REF. FABRICANTE		
REF. FABRICANTE	FABRICANTE	O/C:

AGM-02-0204-PLA-I-0046	DEVICE SUMMARY		
AGM-02-0204-PLA-E-0006	CABLE SUMMARY		
AGM-02-0204-PLA-E-0058	INTERCONNECTION WIRING DIAGRAM		
AGM-02-0204-PLA-P-0048	LIQUID FUEL SYSTEM P&ID		
N° DE DOCUMENTO	DESCRIPCIÓN	REV.	FECHA

DOCUMENTOS DE REFERENCIA

DERWICK · ProEnergy SERVICES · CORPOELEC · La Electricidad de Caracas · SENECA

AMPLIACIÓN DE LA CAPACIDAD DE GENERACIÓN Y TRANSPORTE DE ELECTRICIDAD EN LA ISLA DE MARGARITA

FUEL MANAGEMENT
DUAL FUEL MOD. UNITS 298034 & 298035
(MECHANICAL ARRANGEMENT)

PLANO N°:	REV:		
PROYECTO N°: 409-2956-1			
CALCULO:	PROYECTO:	ESCALA: NONE	PLANO No:
REVISADO: C. Brown	CALCULO:	FECHA: 14/09/11	AGM-02-0204-PLA-M-0075
DIBUJO: S. Boerckel	REVISADO: J. Castillo	DISK. N°	
APROBADO: T. Koontz	DIBUJO:	ESC./PLOTEO:	
ARCHIVO:	APROBADO: M. Monticelli	ARCHIVO:	PAGINA: 1 DE: 2 — REV. 2

F_A1_11 – 841x594mm

LINEA DE CORTE DE COPIA
LINEA DE CORTE DE ORIGINAL

LINEA DE CORTE DE ORIGINAL
LINEA DE CORTE DE COPIA

N° PLANO: AGM-02-0204-PLA-M-0075 | 2

IMPORTANTE

ESTE PLANO FUE ELABORADO EN AUTOCAD V.2008
CUALQUIER MODIFICACION REALIZADA EN CAMPO DEBERA SER NOTIFICADO A LA UNIDAD RESPONSABLE.
QUEDA PROHIBIDO CORREGIR ESTE PLANO SIN AUTORIZACION DE ESTA UNIDAD.

ALL DIMENSIONS IN BRACKETS [ ] ARE MILLIMETER; EXPRESSED DIMENSIONS ARE INCHES

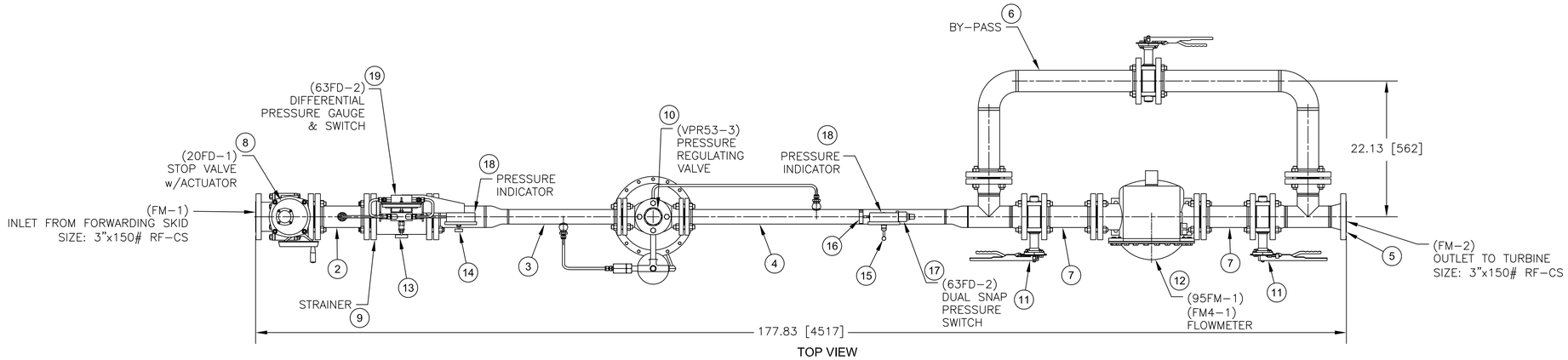

TOP VIEW

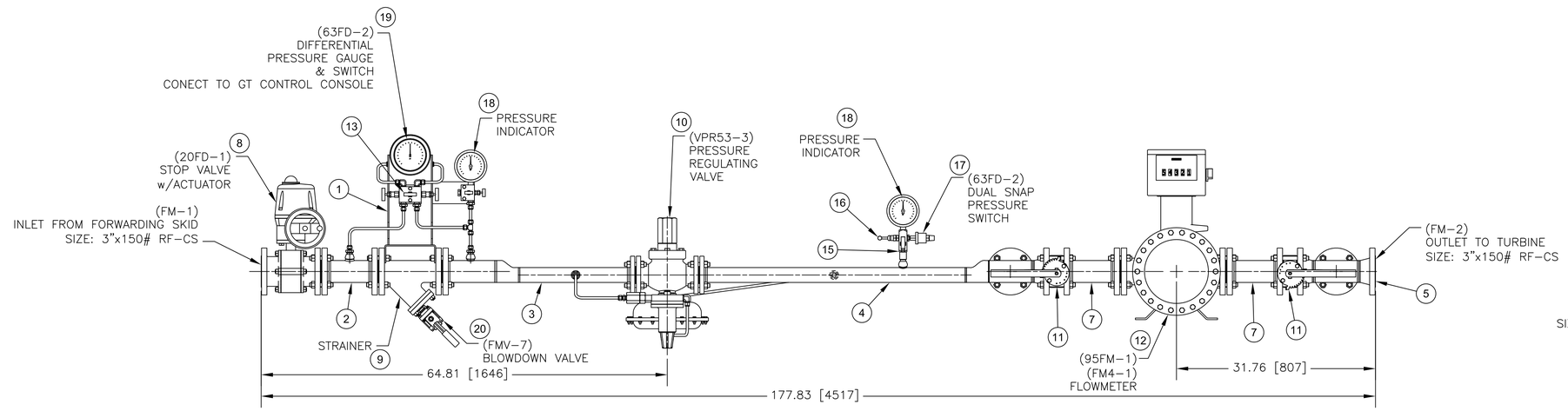

SIDE VIEW

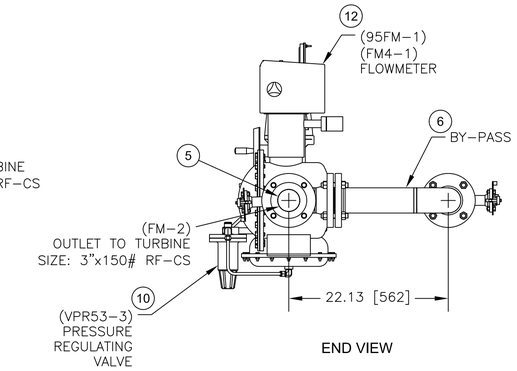

END VIEW

N° DE DOCUMENTO	DESCRIPCIÓN	REV.	FECHA
AGM-02-0204-PLA-I-0046	DEVICE SUMMARY		
AGM-02-0204-PLA-E-0006	CABLE SUMMARY		
AGM-02-0204-PLA-E-0058	INTERCONNECTION WIRING DIAGRAM		
AGM-02-0204-PLA-P-0048	LIQUID FUEL SYSTEM P&ID		

DOCUMENTOS DE REFERENCIA

REV.	FECHA	REVISIONES O MODIFICACIONES	DIBUJO	REVISO	APROBO
2	14/09/11	ISSUED FOR CONSTRUCTION	SAB	CB	TK
1	14/06/11	CHANGED PER INELMECA COMMENTS	SAB	CB	TK
0	11/3/11	ISSUED FOR FABRICATION	SAB	CB	TK

REF. FABRICANTE	FABRICANTE	O/C:
REF. FABRICANTE		

DERWICK Energy & Marine Services Group | ProEnergy SERVICES | CORPOELEC | La Electricidad de Caracas | GERENCIA FUNCIONAL DE INGENIERIA Y PROYECTOS | SENECA

AMPLIACIÓN DE LA CAPACIDAD DE GENERACIÓN Y TRANSPORTE DE ELECTRICIDAD EN LA ISLA DE MARGARITA

FUEL MANAGEMENT
DUAL FUEL MOD. UNITS 298034 & 298035
(MECHANICAL ARRANGEMENT)

PLANO N°:	REV:		
PROYECTO N°: 409-2956-1			
CALCULO:	PROYECTO:	ESCALA: 1:10	PLANO No: AGM-02-0204-PLA-M-0075
REVISADO: C. Brown	CALCULO:	FECHA: 14/09/11	
DIBUJO: S. Boerckel	REVISADO: J. Castillo	DISK. N°	
APROBADO: T. Koontz	DIBUJO:	ESC./PLOTEO:	
ARCHIVO:	APROBADO: M. Monticelli	ARCHIVO:	PAGINA: 2 DE: 2 — REV. 2

F_A1_11 – 841x594mm

LINEA DE CORTE DE COPIA
LINEA DE CORTE DE ORIGINAL

N° PLANO: AGM-02-0204-PLA-P-0009 | 0

P-1004 A/S	P-1005 A/S	F-1004	F-1005	P-0403 A/S	P-0404 A/S	X-0405A	X-0405B
LIQUID FUEL FORWARDING SKID DUPLEX PUMP	LIQUID FUEL FORWARDING SKID DUPLEX PUMP	LIQUID FUEL MANAGEMENT SPOOL	LIQUID FUEL MANAGEMENT SPOOL	DEMIN WATER FORWARDING SKID DUPLEX PUMP	DEMIN WATER FORWARDING SKID DUPLEX PUMP	DEMIN WATER INJECTION SKID	DEMIN WATER INJECTION SKID
DESIGN CAPACITY: 150 GPM [34.07 M³/H]	DESIGN CAPACITY: 150 GPM [34.07 M³/H]	DESIGN CAPACITY: 150 GPM [34.07 M³/H]	DESIGN CAPACITY: 150 GPM [34.07 M³/H]	DESIGN CAPACITY: 120 GPM [27.25 M³/H]	DESIGN CAPACITY: 120 GPM [27.25 M³/H]	DESIGN CAPACITY: 115 GPM [26.12 M³/H]	DESIGN CAPACITY: 115 GPM [26.12 M³/H]
DESIGN PRESSURE: 55-150 psig [379-1034 kPa]	DESIGN PRESSURE: 55-150 psig [379-1034 kPa]	DESIGN PRESSURE: 75 psig [517 kPa]	DESIGN PRESSURE: 75 psig [517 kPa]	DESIGN PRESSURE: 15-59 psig [103-407 kPa]	DESIGN PRESSURE: 15-59 psig [103-407 kPa]	DESIGN PRESSURE: 500 psig [3447 kPa]	DESIGN PRESSURE: 500 psig [3447 kPa]
DESIGN TEMP: 40-150°F [4-66°C]	DESIGN TEMP: 40-150°F [4-66°C]	DESIGN TEMP: 40-150°F [4-66°C]	DESIGN TEMP: 40-150°F [4-66°C]	DESIGN TEMP: 40-110°F [4-43°C]	DESIGN TEMP: 40-110°F [4-43°C]	DESIGN TEMP: 40-110°F [4-43°C]	DESIGN TEMP: 40-110°F [4-43°C]

IMPORTANTE

ESTE PLANO FUE ELABORADO EN AUTOCAD V.2008
CUALQUIER MODIFICACION REALIZADA EN CAMPO DEBERA SER NOTIFICADO A LA UNIDAD RESPONSABLE.
QUEDA PROHIBIDO CORREGIR ESTE PLANO SIN AUTORIZACION DE ESTA UNIDAD.

ALL DIMENSIONS IN BRACKETS [ ] ARE METRIC; EXPRESSED UNITS ARE IMPERIAL

NOTES:

1. THE PROCESS AND SERVICES CONDITIONS SHOWN ON STREAM 1006 AND 1007 ARE GIVEN BY THE CUSTOMER AS ENGINEERING DESIGN PROJECT INPUT. THESE VALUES AND PARAMETERS ARE SHOWN ON DRAWING AGM-02-0211-PLA-P-3B01 REV-0 05/11/10 TO BE USED FOR LIQUID FUEL FORWARDING PUMPS. (CUSTOMER RESPONSIBILITY).
2. THE PROCESS AND SERVICES CONDITIONS SHOWN ON STREAM 0407 AND 0408A ARE GIVEN BY THE CUSTOMER AS ENGINEERING DESIGN PROJECT INPUT. THESE VALUES AND PARAMETERS ARE SHOWN ON AGM-02-0211-PLA-P-3G01 REV-1 19/01/11 TO BE USED FOR DEMIN WATER FORWARDING PUMPS. (CUSTOMER RESPONSIBILITY)
3. THE PROCESS AND SERVICES CONDITIONS SHOWN ON STREAMS 12A, 12B, 22A, AND 22B ARE GIVEN BY (CALCULATED AGM-02-0204-CAL-M-0001). (DERWICK RESPONSIBILITY).
4. THE PROCESS AND SERVICES CONDITIONS SHOWN ON STREAMS 1008 AND 1009 (SEE AGM-02-0211-PLA-P-3B01 REV-0 05/11/10) INCLUDES FEED LINES TO BLACK START AND DIESEL PUMP FOR FIRE SYSTEM LIQUID FUEL REQUIREMENTS. THESE VALUES AND PARAMETERS ARE SHOWN ON AGM-02-0211-PLA-P-3B01 REV-0 05/11/10 NOTE 2 (CUSTOMER RESPONSIBILITY)
5. THE PROCESS AND SERVICES CONDITIONS SHOWN ON STREAMS 0409 AND 0412 ARE GIVEN BY CUSTOMER AS ENGINEERING DESIGN PROJECT INPUT. THESE VALUES AND PARAMETERS ARE SHOWN ON DRAWINGS AGM-02-0211-PLA-P-3G01 REV-1 19/01/11 TO BE USED FOR DEMIN WATER FORWARDING PUMPS SUPPLY TO LIQUID FUEL TREATMENT PACKAGE AND GENERATION UNIT WATER WASH SKID. (CUSTOMER RESPONSIBILITY)
6. FLOW TO THE WATER WASH SKID IS A BATCH PROCESS. THE PROCESS CONSITS OF FILLING THE WATER TANK (ON THE SKID), HEATING THE WATER TO 165°F [74°C] AND THEN RUN THE WASH. THIS PROCESS IS DONE WHILE THE UNIT IS NOT RUNNING THUS WATER INJECTION WILL NOT BE REQUIRED DURING THIS PROCESS.

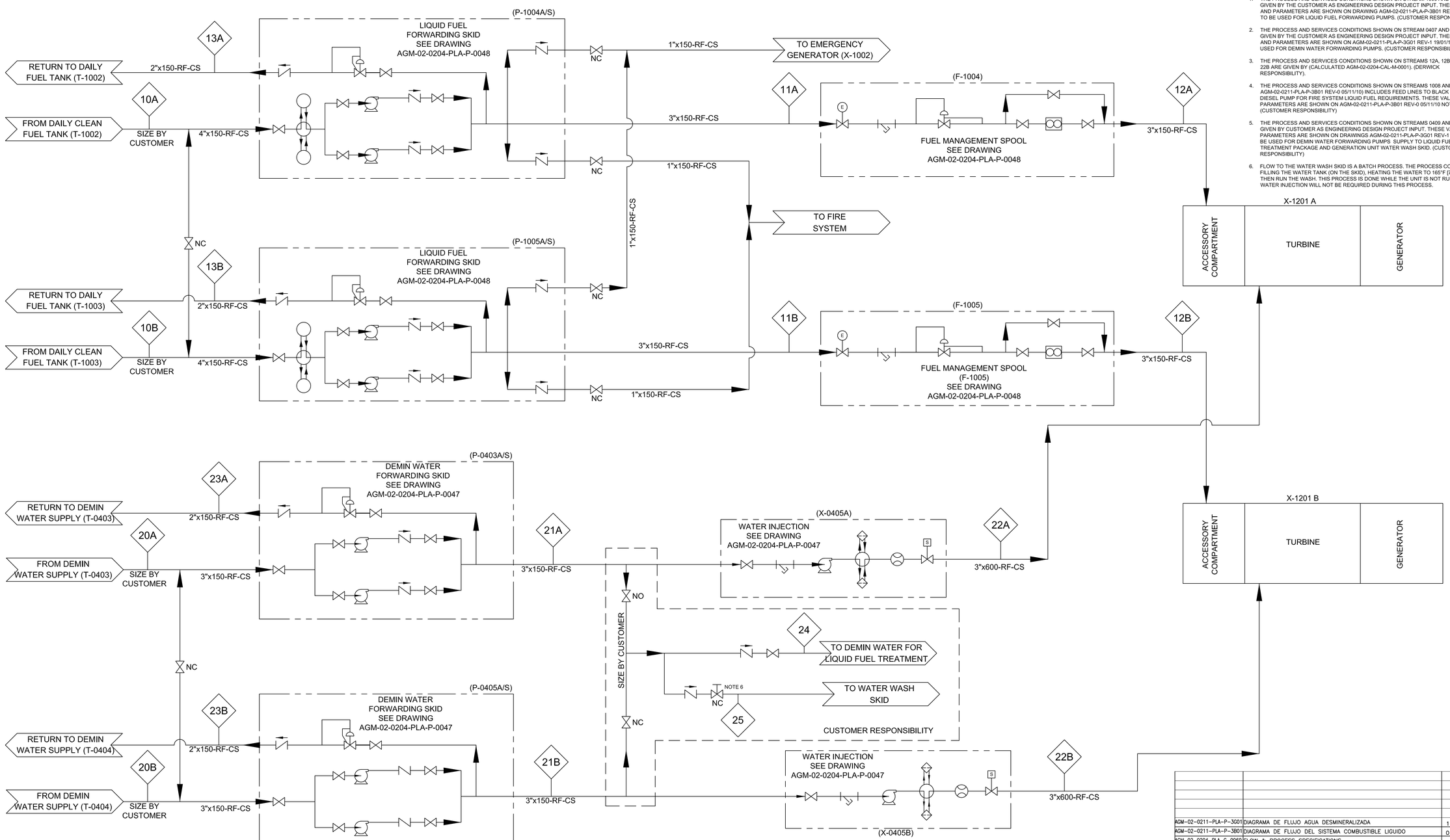

AGM-02-0211-PLA-P-3G01	DIAGRAMA DE FLUJO AGUA DESMINERALIZADA	1	19/01/11
AGM-02-0211-PLA-P-3B01	DIAGRAMA DE FLUJO DEL SISTEMA COMBUSTIBLE LIGUIDO	0	05/11/10
AGM-02-0204-PLA-G-0060	FLOW & PROCESS SPECIFICATIONS		
AGM-02-0204-PLA-P-0048	LIQUID FUEL SYSTEM P&ID		
AGM-02-0204-PLA-P-0047	DEMIN WATER FORWARDING/INJECTION SYSTEM P&ID		
N° DE DOCUMENTO	DESCRIPCIÓN	REV.	FECHA
DOCUMENTOS DE REFERENCIA			

REV.	FECHA	REVISIONES O MODIFICACIONES	DIBUJO	REVISO	APROBO
2	05/07/11	ISSUED FOR CONSTRUCTION	SAB	CB	TK
1	23/05/11	ISSUED FOR REVIEW	SAB	CB	TK
0	15/03/11	ISSUED FOR REVIEW	SAB	CB	TK

REF. FABRICANTE		
REF. FABRICANTE	FABRICANTE	O/C:

LOCATION NUMBER		10A	10B	11A	11B	12A	12B	13A	13B	20A	20B	21A	21B	22A	22B	23A	23B	24	25
																		CUSTOMER RESPONSIBILITY NOTE 5 & 6	
DESCRIPTION	EXPRESSED UNITS IMPERIAL	FROM DAILY CLEAN FUEL TANK T-1002	FROM DAILY CLEAN FUEL TANK T-1003	FROM FORWARDING PUMPS P-1004 A/S	FROM FORWARDING PUMPS P-1005 A/S	FROM FUEL MANAGEMENT SPOOL F-1004	FROM FUEL MANAGEMENT SPOOL F-1005	RETURN TO FUEL SUPPLY P-1004 A/S	RETURN TO FUEL SUPPLY P-1005 A/S	FROM TREATED WATER SUPPLY TO T-0403	FROM TREATED WATER SUPPLY T-0404	FROM DEMIN FORWARDING PUMPS P-0403 A/S	FROM DEMIN FORWARDING PUMPS P-0405 A/S	FROM WATER INJECTION X-0405A	FROM WATER INJECTION X-0405B	RETURN TO TREATED WATER SUPPLY P-0403 A/S	RETURN TO TREATED WATER SUPPLY P-0405 A/S	TO LIQUID FUEL TREATMENT (NOTE 5)	TO WATER WASH SKID (NOTE 6)
FLOW RATE	GPM [M³/H]	150 [34]	150 [34]	108 [24.5]	108 [24.5]	108 [24.5]	108 [24.5]	42 [9.5]	42 [9.5]	115 [26.2]	115 [26.2]	50 [11.4]	50 [11.4]	50 [11.4]	50 [11.4]	63.55 [14.43]	63.55 [14.43]	1.45 [.33]	2.09 [.475]
TEMPERATURE	°F [°C]	81.14 [27.3]	81.14 [27.3]	81.14 [27.3]	81.14 [27.3]	81.14 [27.3]	81.14 [27.3]	81.14 [27.3]	81.14 [27.3]	81.14 [27.3]	81.14 [27.3]	81.14 [27.3]	81.14 [27.3]	81.14 [27.3]	81.14 [27.3]	81.14 [27.3]	81.14 [27.3]	81.14 [27.3]	81.14 [27.3]
PRESSURE	psig [kPa]	2 [14]	2 [14]	95 [655]	95 [655]	60 [414]	60 [414]	2 [14]	2 [14]	2 [14]	2 [14]	53 [365]	53 [365]	500 [3447]	500 [3447]	2 [14]	2 [14]	124.43 [857.9]	135.44 [933.8]
DENSITY	lbs/ft³ [kg/m³]	53.94 [864]	53.94 [864]	53.94 [864]	53.94 [864]	53.94 [864]	53.94 [864]	53.94 [864]	53.94 [864]	62.8 [1006]	62.8 [1006]	62.8 [1006]	62.8 [1006]	62.8 [1006]	62.8 [1006]	62.8 [1006]	62.8 [1006]	62.8 [1006]	62.8 [1008]
VISCOSITY	Pa-s	0.004000	0.004000	0.004000	0.004000	0.004000	0.004000	0.004000	0.004000	0.000851	0.000851	0.000851	0.000851	0.000851	0.000851	0.000851	0.000851	0.000851	0.000851
TOTAL DISSOLVED SOLIDS	ppm	0.00	0.00	0.00	0.00	0.00	0.00	0.00	0.00	2.30	2.30	2.30	2.30	2.30	2.30	2.30	2.30	2.30	2.30

DERWICK | ProEnergy SERVICES | CORPOELEC | La Electricidad de Caracas | SENECA

AMPLIACIÓN DE LA CAPACIDAD DE GENERACIÓN Y TRANSPORTE DE ELECTRICIDAD EN LA ISLA DE MARGARITA
FLOW AND PROCESS
DUAL FUEL MOD. UNITS 298034 & 298035
(DIAGRAM)

PLANO N°: | REV:
PROYECTO N°: 409-2956-1

CALCULO:	PROYECTO:	ESCALA: NONE	PLANO No: AGM-02-0204-PLA-P-0009
REVISADO: C. Brown	CALCULO:	FECHA: 05/07/11	
DIBUJO: S. Boerckel	REVISADO: J. Castillo	DISK. N°	
APROBADO: T. Koontz	DIBUJO:	ESC./PLOTEO:	REV. 0
ARCHIVO:	APROBADO: M. Monticelli	ARCHIVO:	PAGINA: 1 DE: 1

F_A1_11 – 841x594mm

LINEA DE CORTE DE ORIGINAL
LINEA DE CORTE DE COPIA

N° PLANO: AGM-02-0204-PLA-P-0009 | 1

P-1004 A/S
LIQUID FUEL FORWARDING SKID DUPLEX PUMP
DESIGN CAPACITY: 150 GPM [34.07 M³/H]
DESIGN PRESSURE: 67-106.5 psig [462-734.3 kPa]
DESIGN TEMP: 40-150°F [4-66°C]

P-1005 A/S
LIQUID FUEL FORWARDING SKID DUPLEX PUMP
DESIGN CAPACITY: 150 GPM [34.07 M³/H]
DESIGN PRESSURE: 67-106.5 psig [462-734.3 kPa]
DESIGN TEMP: 40-150°F [4-66°C]

F-1004
LIQUID FUEL MANAGEMENT SPOOL
DESIGN CAPACITY: 150 GPM [34.07 M³/H]
DESIGN PRESSURE: 35-70 psig [241-483 kPa]
DESIGN TEMP: 40-150°F [4-66°C]

F-1005
LIQUID FUEL MANAGEMENT SPOOL
DESIGN CAPACITY: 115 GPM [34.07 M³/H]
DESIGN PRESSURE: 35-70 psig [241-483 kPa]
DESIGN TEMP: 40-150°F [4-66°C]

P-0403 A/S
DEMIN WATER FORWARDING SKID DUPLEX PUMP
DESIGN CAPACITY: 115 GPM [26.12 M³/H]
DESIGN PRESSURE: 69 psig [476 kPa]
DESIGN TEMP: 40-110°F [4-43°C]

P-0404 A/S
DEMIN WATER FORWARDING SKID DUPLEX PUMP
DESIGN CAPACITY: 115 GPM [26.12 M³/H]
DESIGN PRESSURE: 69 psig [476 kPa]
DESIGN TEMP: 40-110°F [4-43°C]

X-0405A
DEMIN WATER INJECTION SKID
DESIGN CAPACITY: 115 GPM [26.12 M³/H]
DESIGN PRESSURE: 500 psig [3447 kPa]
DESIGN TEMP: 40-110°F [4-43°C]

X-0405B
DEMIN WATER INJECTION SKID
DESIGN CAPACITY: 115 GPM [26.12 M³/H]
DESIGN PRESSURE: 500 psig [3447 kPa]
DESIGN TEMP: 40-110°F [4-43°C]

I M P O R T A N T E
ESTE PLANO FUE ELABORADO EN AUTOCAD V.2008
CUALQUIER MODIFICACION REALIZADA EN CAMPO DEBERA SER NOTIFICADO A LA UNIDAD RESPONSABLE.
QUEDA PROHIBIDO CORREGIR ESTE PLANO SIN AUTORIZACION DE ESTA UNIDAD.

ALL DIMENSIONS IN BRACKETS [ ] ARE METRIC; EXPRESSED UNITS ARE IMPERIAL

NOTES:
1. THE PROCESS AND SERVICES CONDITIONS SHOWN ON STREAM 1006 AND 1007 ARE GIVEN BY THE CUSTOMER AS ENGINEERING DESIGN PROJECT INPUT. THESE VALUES AND PARAMETERS ARE SHOWN ON DRAWING AGM-02-0211-PLA-P-3B01 REV-0 05/11/10 TO BE USED FOR LIQUID FUEL FORWARDING PUMPS. (CUSTOMER RESPONSIBILITY).
2. THE PROCESS AND SERVICES CONDITIONS SHOWN ON STREAM 0407 AND 0408A ARE GIVEN BY THE CUSTOMER AS ENGINEERING DESIGN PROJECT INPUT. THESE VALUES AND PARAMETERS ARE SHOWN ON AGM-02-0211-PLA-P-3G01 REV-1 19/01/11 TO BE USED FOR DEMIN WATER FORWARDING PUMPS. (CUSTOMER RESPONSIBILITY)
3. THE PROCESS AND SERVICES CONDITIONS SHOWN ON STREAMS 12A, 12B, 22A, AND 22B ARE GIVEN BY (CALCULATED AGM-02-0204-CAL-M-0001). (DERWICK RESPONSIBILITY).
4. THE PROCESS AND SERVICES CONDITIONS SHOWN ON STREAMS 1008 AND 1009 (SEE AGM-02-0211-PLA-P-3B01 REV-0 05/11/10) INCLUDES FEED LINES TO BLACK START AND DIESEL PUMP FOR FIRE SYSTEM LIQUID FUEL REQUIREMENTS. THESE VALUES AND PARAMETERS ARE SHOWN ON AGM-02-0211-PLA-P-3B01 REV-0 05/11/10 NOTE 2 (CUSTOMER RESPONSIBILITY)
5. THE PROCESS AND SERVICES CONDITIONS SHOWN ON STREAMS 0409 AND 0412 ARE GIVEN BY CUSTOMER AS ENGINEERING DESIGN PROJECT INPUT. THESE VALUES AND PARAMETERS ARE SHOWN ON DRAWINGS AGM-02-0211-PLA-P-3G01 REV-1 19/01/11 TO BE USED FOR DEMIN WATER FORWARDING PUMPS SUPPLY TO LIQUID FUEL TREATMENT PACKAGE AND GENERATION UNIT WATER WASH SKID. (CUSTOMER RESPONSIBILITY)
6. FLOW TO THE WATER WASH SKID IS A BATCH PROCESS. THE PROCESS CONSITS OF FILLING THE WATER TANK (ON THE SKID), HEATING THE WATER TO 165°F [74°C] AND THEN RUN THE WASH. THIS PROCESS IS DONE WHILE THE UNIT IS NOT RUNNING THUS WATER INJECTION WILL NOT BE REQUIRED DURING THIS PROCESS.

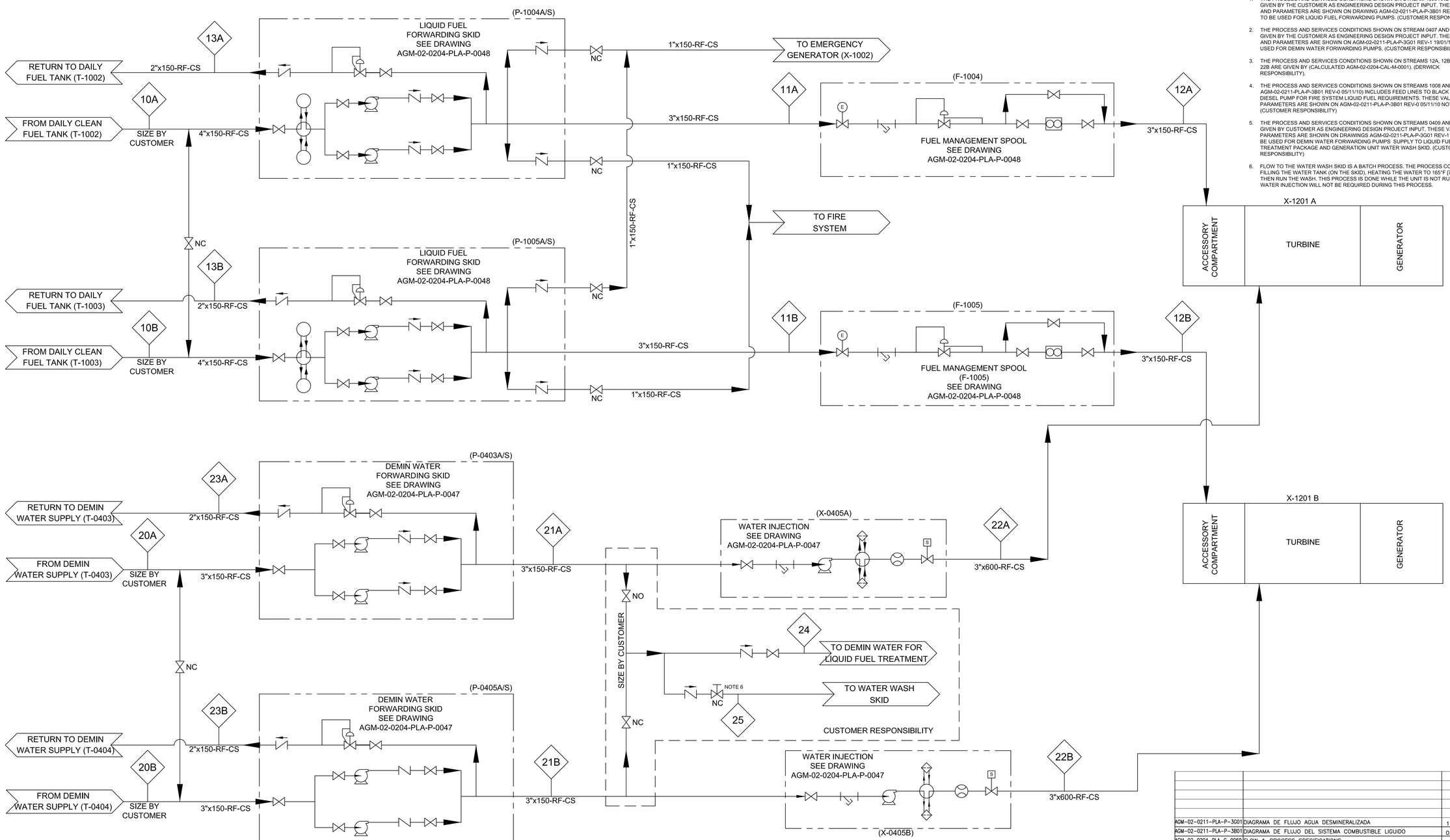

AGM-02-0211-PLA-P-3G01	DIAGRAMA DE FLUJO AGUA DESMINERALIZADA	1	19/01/11
AGM-02-0211-PLA-P-3B01	DIAGRAMA DE FLUJO DEL SISTEMA COMBUSTIBLE LIGUIDO	0	05/11/10
AGM-02-0204-PLA-G-0060	FLOW & PROCESS SPECIFICATIONS		
AGM-02-0204-PLA-P-0048	LIQUID FUEL SYSTEM P&ID		
AGM-02-0204-PLA-P-0047	DEMIN WATER FORWARDING/INJECTION SYSTEM P&ID		
N° DE DOCUMENTO	DESCRIPCIÓN	REV.	FECHA

DOCUMENTOS DE REFERENCIA

REV.	FECHA	REVISIONES O MODIFICACIONES	DIBUJO	REVISO	APROBO
1	14/09/11	ISSUED FOR CONSTRUCTION			
0	05/07/11	ISSUED FOR CONSTRUCTION	SAB	CB	TK
B	23/05/11	ISSUED FOR REVIEW	SAB	CB	TK
A	15/03/11	ISSUED FOR REVIEW	SAB	CB	TK

REF. FABRICANTE		
REF. FABRICANTE	FABRICANTE	O/C:

LOCATION NUMBER		10A	10B	11A	11B	12A	12B	13A	13B	20A	20B	21A	21B	22A	22B	23A	23B	24	25
																		CUSTOMER RESPONSIBILITY NOTE 5 & 6	
DESCRIPTION	EXPRESSED UNITS IMPERIAL	FROM DAILY CLEAN FUEL TANK T-1002	FROM DAILY CLEAN FUEL TANK T-1003	FROM FORWARDING PUMPS P-1004 A/S	FROM FORWARDING PUMPS P-1005 A/S	FROM FUEL MANAGEMENT SPOOL F-1004	FROM FUEL MANAGEMENT SPOOL F-1005	RETURN TO FUEL SUPPLY P-1004 A/S	RETURN TO FUEL SUPPLY P-1005 A/S	FROM TREATED WATER SUPPLY T-0403	FROM TREATED WATER SUPPLY T-0404	FROM DEMIN FORWARDING PUMPS P-0403 A/S	FROM DEMIN FORWARDING PUMPS P-0405 A/S	FROM WATER INJECTION X-0405A	FROM WATER INJECTION X-0405B	RETURN TO TREATED WATER SUPPLY P-0403 A/S	RETURN TO TREATED WATER SUPPLY P-0405 A/S	TO LIQUID FUEL TREATMENT (NOTE 5)	TO WATER WASH SKID (NOTE 6)
FLOW RATE	GPM [M³/H]	150 [34]	150 [34]	108 [24.5]	108 [24.5]	108 [24.5]	108 [24.5]	42 [9.5]	42 [9.5]	115 [26.2]	115 [26.2]	50 [11.4]	50 [11.4]	94 [21.3]	94 [21.3]	63.55 [14.43]	63.55 [14.43]	1.45 [.33]	2.09 [.475]
TEMPERATURE	°F [°C]	81.14 [27.3]	81.14 [27.3]	81.14 [27.3]	81.14 [27.3]	81.14 [27.3]	81.14 [27.3]	81.14 [27.3]	81.14 [27.3]	81.14 [27.3]	81.14 [27.3]	81.14 [27.3]	81.14 [27.3]	81.14 [27.3]	81.14 [27.3]	81.14 [27.3]	81.14 [27.3]	81.14 [27.3]	81.14 [27.3]
PRESSURE	psig [kPa]	2 [14]	2 [14]	78 [538]	78 [538]	70 [483]	70 [483]	2 [14]	2 [14]	2 [14]	2 [14]	69 [476]	69 [476]	500 [3447]	500 [3447]	2 [14]	2 [14]	124.43 [857.9]	135.44 [933.8]
DENSITY	lbs/ft³ [kg/m³]	53.94 [864]	53.94 [864]	53.94 [864]	53.94 [864]	53.94 [864]	53.94 [864]	53.94 [864]	53.94 [864]	62.8 [1006]	62.8 [1006]	62.8 [1006]	62.8 [1006]	62.8 [1006]	62.8 [1006]	62.8 [1006]	62.8 [1006]	62.8 [1006]	62.8 [1008]
VISCOSITY	Pa-s	0.004000	0.004000	0.004000	0.004000	0.004000	0.004000	0.004000	0.004000	0.000851	0.000851	0.000851	0.000851	0.000851	0.000851	0.000851	0.000851	0.000851	0.000851
TOTAL DISSOLVED SOLIDS	ppm	0.00	0.00	0.00	0.00	0.00	0.00	0.00	0.00	2.30	2.30	2.30	2.30	2.30	2.30	2.30	2.30	2.30	2.30

DERWICK | ProEnergy SERVICES | CORPOELEC | La Electricidad de Caracas | SENECA

AMPLIACIÓN DE LA CAPACIDAD DE GENERACIÓN Y TRANSPORTE DE ELECTRICIDAD EN LA ISLA DE MARGARITA
FLOW AND PROCESS
DUAL FUEL MOD. UNITS 298034 & 298035
(DIAGRAM)

PLANO N°:	REV:		
PROYECTO N°: 409-2956-1			
CALCULO:	PROYECTO:	ESCALA: NONE	PLANO No: AGM-02-0204-PLA-P-0009
REVISADO: C. Brown	CALCULO:	FECHA: 14/09/11	
DIBUJO: S. Boerckel	REVISADO: J. Castillo	DISK. N°	
APROBADO: T. Koontz	DIBUJO:	ESC./PLOTEO:	
ARCHIVO:	APROBADO: M. Monticelli	ARCHIVO:	PAGINA: 1 DE: 1 REV. 1

F_A1_11 – 841x594mm

LINEA DE CORTE DE COPIA
LINEA DE CORTE DE ORIGINAL

N° PLANO: AGM-02-0204-PLA-P-0047 | 0

NOTES:

1. SEE AGM-02-0204-PLA-I-0046 (DEVICE SUMMARY) MLI 0414 FOR CONTROL DEVICE SETTINGS.
2. XXXX = 0403 FOR UNIT-1 & 0405 FOR UNIT-2.
3. SUCTION PIPING FROM TANK TO SKID DESIGNED ACCORDING TO BEST PRACTICES TO REDUCE TURBULENCE AND AIR ENTRAPMENT - FLOODED SUCTION REQUIRED. 2 psi MIN REQUIRED AT FLANGE FOR SKID LOSSES.

ALL DIMENSIONS IN BRACKETS [ ] ARE MILLIMETER; EXPRESSED DIMENSIONS ARE INCHES

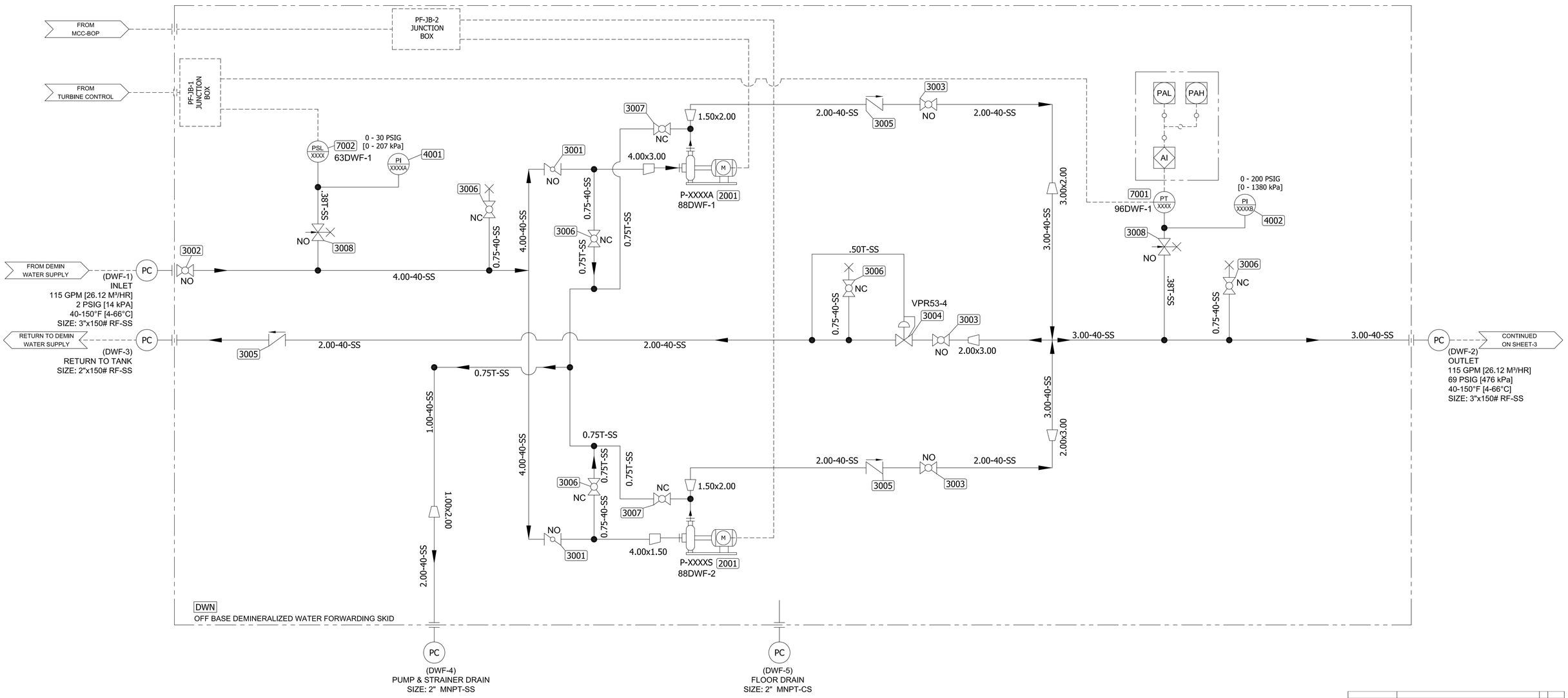

N° DOCUMENTO	DESCRIPCIÓN	REV.	FECHA
AGM-02-0204-PLA-I-0046	DEVICE SUMMARY		
AGM-02-0204-PLA-G-0060	FLOW & PROCESS SPECIFICATIONS		
AGM-02-0204-PLA-M-0038	DEMIN WATER FORWARDING SKID GENERAL ARRANGEMENT		
AGM-02-0204-PLA-P-0009	PROCESS FLOW DIAGRAM		

DOCUMENTOS DE REFERENCIA

REV.	FECHA	REVISIONES O MODIFICACIONES	DIBUJO	REVISO	APROBO
0	14/09/11	ISSUED FOR CONSTRUCTION	SAB	CB	TK
A	13/07/11	ISSUED FOR REVIEW	SAB	CB	TK
B	15/03/11	ISSUED FOR REVIEW	SAB	CB	TK

REF. FABRICANTE		
REF. FABRICANTE	FABRICANTE	O/C:

DERWICK | ProEnergy | CORPOELEC | La Electricidad de Caracas | SENECA

CAPACITY EXPANSION OF ELECTRICITY GENERATION AND TRANSPORT IN THE ISLAND OF MARGARITA

DEMIN WATER FORWARDING/INJECTION SYSTEM P&ID
DUAL FUEL MOD. UNITS 298034 & 298035
(DEMIN WATER FORWARDING SKID P-0403A/S & P-0405A/S)

PLANO N°:	REV:		
PROYECTO N°: 409-2956-1			
CALCULO:	PROYECTO:	ESCALA: NONE	PLANO No: AGM-02-0204-PLA-P-0047
REVISADO: C. Brown	CALCULO:	FECHA: 14/09/11	
DIBUJO: S. Boerckel	REVISADO: J. Castillo	DISK. N°	
APROBADO: T. Koontz	DIBUJO:	ESC./PLOTED:	
ARCHIVO:	APROBADO: M. Monticelli	ARCHIVO:	PAGINA: 1 DE: 4 — REV: 0

F_A0_11 – 1189x841mm

NOTES:

1. SEE AGM-02-0204-PLA-I-0046 (DEVICE SUMMARY) MLI 0414 FOR CONTROL DEVICE SETTINGS.

2. QTY'S ARE PER UNIT.

ALL DIMENSIONS IN BRACKETS [ ] ARE MILLIMETER; EXPRESSED DIMENSIONS ARE INCHES

PARTS LIST FOR DEMINERALIZED WATER FORWARDING SKID (SHEET-1)

ITEM	TAG No UNIT-1	TAG No UNIT-2	DEVICE No	DEVICE	QTY (NOTE:2)	DESCRIPTION	CATALOG No	MANUFACTURER
2001	P-0403A P-0403B	P-0405A P-0405B	88DWF-1 88DWF-2	PUMP MOTOR ASSEMBLY	2	MODEL 1K3X1.5-82RV DURCO MARK 3 PUMP (15HP) w/150# ANSI FF FLANGES (Type A BASE)	1K3x1.5-82RV M3 ST	FLOWSERVE
3001	DWFV-1A DWFV-1B			BUTTERFLY VALVE - INLET (PUMP-A) BUTTERFLY VALVE - INLET (PUMP-S)	2	4" x 150# SS DYNACENTRIC HP BFV SERIES B5100, CLASS 150		COOPER CAMERON
3002	DWFV-2			BALL VALVE - INLET	1	4" x 150# SS BALL VALVE - ANSI		
3003	DWFV-3A DWFV-3B DWFV-3C			BALL VALVE - DISCHARGE (PUMP-A) BALL VALVE - DISCHARGE (PUMP-S) BALL VALVE - RETURN TO TANK	3	2" x 150# SS BALL VALVE - ANSI		
3004	DWFV-4		VPR53-4	BACK PRESSURE VALVE	1	2" x 150# SS BACK PRESSURE VALVE - 63EG	2x63EG	FISHER
3005	DWFV-5A DWFV-5B DWFV-5C			CHECK VALVE - DISCHARGE (PUMP-A) CHECK VALVE - DISCHARGE (PUMP-S) CHECK VALVE - RETURN TO TANK	3	2" DUO CHECK VALVE - SS		
3006	DWFV-6A DWFV-6B DWFV-6C DWFV-6D DWFV-6E			BALL VALVE - VENT (INLET) BALL VALVE - VENT (DISCHARGE) BALL VALVE - VENT (RETURN TO TANK) BALL VALVE - INLET DRAIN (PUMP-A) BALL VALVE - INLET DRAIN (PUMP-S)	5	3/4" FNPT BALL VALVE - SS	SS-65TF12	SWAGELOK
3007	DWFV-7A DWFV-7B			BALL VALVE - DISCHARGE DRAIN (PUMP-A) BALL VALVE - DISCHARGE DRAIN (PUMP-S)	2	3/4" SWAGE BALL VALVE - SS	SS-63TS12	SWAGELOK
3008	DWFV-8A DWFV-8B			GAGE VALVE - INLET PRESSURE SWITCH LOW GAGE VALVE - DISCHARGE PRESSURE	2	1/4" FNPT GAGE VALVE w/ STEM TEST		DRAGON
4001	PI-0403A	PI-0405A		SUCTION PRESSURE GAGE	1	4.5" GAGE FLUSH MOUNT LOWER CONN. 1/4" MNPT 0-30 PSIG	7112-G030	DWYER
4002	PI-0403B	PI-0405B		DISCHARGE PRESSURE GAGE	1	4.5" GAGE FLUSH MOUNT LOWER CONN. 1/4" MNPT 0-200 PSIG	7112-G200	DWYER
7001	PT-0403	PT-0405	96DWF-1	PRESSURE TRANSMITTER	1	ROSEMOUNT 3051 SERIES PT 0-200 PSIG - SS	3051TG2A2A21AB4C6	ROSEMOUNT
7002	PSL-0403	PSL-0405	63DWF-1	PRESSURE SWITCH LOW	1	PRESSURE & VACUUM SWITCH 40-0-40 IN WC - SS	52NN-K117-M1-B2A-TT	SOR

N° DE DOCUMENTO	DESCRIPCIÓN	REV	FECHA
AGM-02-0204-PLA-I-0046	DEVICE SUMMARY		
AGM-02-0204-PLA-G-0060	FLOW & PROCESS SPECIFICATIONS		
AGM-02-0204-PLA-M-0038	DEMIN WATER FORWARDING SKID GENERAL ARRANGEMENT		
AGM-02-0204-PLA-P-0009	PROCESS FLOW DIAGRAM		

DOCUMENTOS DE REFERENCIA

REV.	FECHA	REVISIONES O MODIFICACIONES	DIBUJO	REVISO	APROBO
0					
1					
2	14/09/11	ISSUED FOR CONSTRUCTION	SAB	CB	TK
3	13/07/11	ISSUED FOR REVIEW	SAB	CB	TK
4	15/03/11	ISSUED FOR REVIEW	SAB	CB	TK

REF. FABRICANTE		
REF. FABRICANTE	FABRICANTE	O/C:

DERWICK ENERGY SOLUTIONS CORP. · ProEnergy · CORPOELEC · Electricidad de Caracas · GERENCIA FUNCIONAL DE INGENIERIA Y PROYECTO · SENECA

CAPACITY EXPANSION OF ELECTRICITY GENERATION AND TRANSPORT IN THE ISLAND OF MARGARITA

DEMIN WATER FORWARDING/INJECTION SYSTEM P&ID
DUAL FUEL MOD. UNITS 298034 & 298035
(DEMIN WATER FORWARDING SKID P-0403A/S & P-0405A/S)

PLANO N°:	REV:		
PROYECTO N°: 409-2956-1			
CALCULO:	PROYECTO:	ESCALA: NONE	PLANO No: AGM-02-0204-PLA-P-0047
REVISADO: C. Brown	CALCULO:	FECHA: 14/09/11	
DIBUJO: S. Boerckel	REVISADO: J. Castillo	DISK. N°	
APROBADO: T. Koontz	DIBUJO:	ESC./PLOTEO:	REV: 0
ARCHIVO:	APROBADO: M. Montilla	ARCHIVO:	PAGINA: 2 DE: 4

F_A0_11 – 1188x841mm

Nº PLANO: AGM-02-0204-PLA-P-0047 1

NOTES:
1. SEE DEVICE SUMMARY (AGM-02-0204-PLA-I-0046 (MLI 0414) FOR FOR CONTROL DEVICE SETTINGS.
2. ALL INTERCONNECTING PIPING, FLANGES, VALVING, ETC. BOTH TO AND FROM THE WATER INJECTION SKID MUST BE STAINLESS STEEL (ANSI 304L OR 316L). THE WATER STORAGE FACILITY SHOULD BE STAINLESS STEEL OR SUITABLY COATED.
3. PUMP NOT TO BE RUN ON "RECIRCULATION ONLY" AT FULL SPEED, NOR FOR MORE THAN 20 MINUTES AT PART SPEED.
4. THE MINIMUM STEADY STATE WATER INJECTION FLOW (WJ2) IS 18 GPM [1.13 L/S]. THE ACTUAL MAXIMUM LINE PRESSURES ARE INDICATED ON THE SCHEMATIC.
5. THE STOP VALVE SHALL CLOSE IN 0.75 SECONDS OR LESS WHEN INSTALLED IN THE SKID.
6. FLOWS ARE STATED IN U.S. GALLONS PER MINUTE (GPM) AND IN LITERS PER MINUTE (LPM).
7. CASCADE ORIFICE IS DESIGNED TO PROVIDE A FLOW RATE OF 10 GPM AT A BACK PRESSURE OF 30 PSIG, WITH THE PUMP RUNNING AT IT'S DESIGN POINT.
8. VOLUME OF PIPING SUPPLIED BY OTHERS BETWEEN THE WATER INJECTION SKID AND TURBINE BASE SHALL NOT EXCEED EQUIVALENT OF 100 FEET (30.5 M) OF 3 INCH (76 MM) DIAMETER SCH 40 PIPING.
9. HIGH POINT VENT(S) AND LOW POINT DRAINS TO BE LOCATED WHERE NEEDED IN THE INTERCONNECTING PIPING.

ALL DIMENSIONS IN BRACKETS [ ] ARE MILLIMETER; EXPRESSED DIMENSIONS ARE INCHES

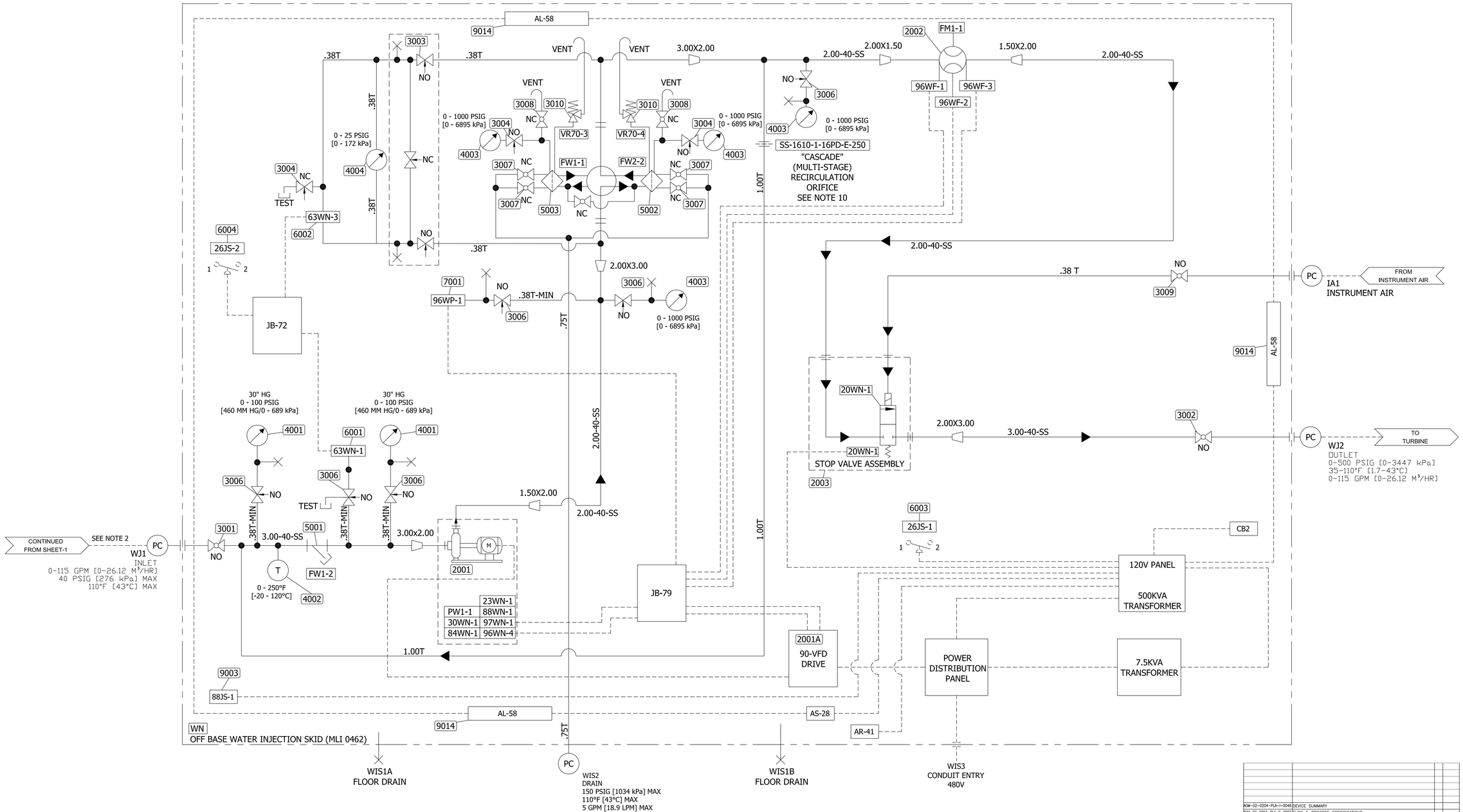

Nº DE DOCUMENTO	DESCRIPCIÓN	REV.	FECHA
AGM-02-0204-PLA-I-0046	DEVICE SUMMARY		
AGM-02-0204-PLA-G-0060	FLOW & PROCESS SPECIFICATIONS		
AGM-02-0204-PLA-M-0041	WATER INJECTION SKID – GENERAL ARRANGEMENT		
AGM-02-0204-PLA-P-0009	PROCESS FLOW DIAGRAM		

DOCUMENTOS DE REFERENCIA

REV.	FECHA	REVISIONES O MODIFICACIONES	DIBUJO	REVISO	APROBO
1	14/09/11	ISSUED FOR CONSTRUCTION	SAB	CB	TK
0	13/07/11	ISSUED FOR CONSTRUCTION	SAB	CB	TK

REF. FABRICANTE		
REF. FABRICANTE	FABRICANTE	O/C:

DERWICK · ProEnergy · CORPOELEC · La Electricidad de Caracas · SENECA

CAPACITY EXPANSION OF ELECTRICITY GENERATION AND TRANSPORT IN THE ISLAND OF MARGARITA
DEMIN WATER FORWARDING/INJECTION SYSTEM P&ID
DUAL FUEL MOD. UNITS 298034 & 298035
(WATER INJECTION SKID X405A & X405B)

PLANO Nº:	REV: 1	PROYECTO Nº: 409-2956-1	
CALCULO:		PROYECTO:	ESCALA: NONE
REVISADO: C. Brown		CALCULO:	FECHA: 14/09/11
DIBUJO: S. Boerckel		REVISADO: J. Castillo	DISK. Nº
APROBADO: T. Koontz		DIBUJO:	ESC./PLOTED:
ARCHIVO:		APROBADO: M. Monticelli	ARCHIVO:

PLANO Nº: AGM-02-0204-PLA-P-0047
PAGINA: 3 DE: 4
REV: 1

F_A0_11 – 1189x841mm

LINEA DE CORTE DE ORIGINAL
LINEA DE CORTE DE COPIA

N° PLANO: AGM-02-0204-PLA-P-0047 1

NOTES:

1. SEE AGM-02-0204-PLA-I-0046 (DEVICE SUMMARY) MLI 0414 FOR CONTROL DEVICE SETTINGS.

2. QTY'S ARE PER UNIT.

ALL DIMENSIONS IN BRACKETS [ ] ARE MILLIMETER; EXPRESSED DIMENSIONS ARE INCHES

PARTS LIST FOR WATER INJECTION SKID (SHEET-3)

ITEM	DEVICE	REFERENCE	QTY	DESCRIPTION	SUPPLIER PART No	MANUFACTURER
2001	PW1-1 23WN-1 88WN-1 96WN-1	PUMP/MOTOR ASSY	1	SUNDYNE/SUNFLO P-2000 w/BALDOR 60HP 3656 RPM 364TDZ MOTOR	P25-FCT	SUN-FLO
2001A	97WN-1	VFD	1	Variable Ferquancy Controller	FRN003G113-4UX	FUJI
2002	FM1-1 96WF-1 96WF-2 96WF-3	FLOW METER	1	TURBINE FLOWMETER	FT-24C3XWRLEGTT026	FLOW TECHNOLOGY
2003	20WN-1	STOP VALVE		OUTLET STOP VALVE - PNEUMATIC ACTUATED - 2"x600#		CR-TEC
3001	WIGV-1	BALL VALVE	1	Inlet Ball Valve (3"-150lb RF)	53337	FLOWTECH
3002	WIGV-2	BALL VALVE	1	Outlet Ball Valve (3"-600lb RF)	53365	FLOWTECH
3003	WIGV-3	INSTRUMENT 3-WAY VALVE	1	Differential Pressure Guage Assembly 4004	SS-V3NBF8	SWAGELOCK
3004	WIGV-4A WIGV-4B WIGV-4C	NEEDLE VALVE	3	Filter Guage & Differential Pressure Guage Assembly Vent	SS-5PDF8	SWAGELOCK
3005	WIGV-5	NEEDLE VALVE	1	Installs on Guage Valve on Pressure Switch 6001 Assembly	SS-5PDM8	SWAGELOCK
3006	WIGV-6A WIGV-6B WIGV-6C WIGV-6D WIGV-6E WIGV-6F WIGV-6G WIGV-6H	GUAGE VALVE	6	Gauges and Instrumentation	SS-5PDGM8-F8	SWAGELOCK
3007	WIGV-7A WIGV-7B WIGV-7C WIGV-7D	BALL VALVE	4	Filter Housing Drain Valves	SS-45S12	SWAGELOCK
3008	WIGV-8A WIGV-8B	BALL VALVE	2	Filter Housing Vent Valves	SS-45S8	SWAGELOCK
3009	WIGV-9	BALL VALVE	1	Instrument Air Isolation to Stop Valve Assy	SS44S6	SWAGELOCK
3010	WIGV-10A WIGV-10B	PRESSURE RELIEF VALVE	2	Filter Housing PRV	SS-RL4S8	SWAGELOCK
4001	WIG-1A WIG-1B	PRESSURE GAUGE	2	Pressure Gauge 30" hg/0-100psig [460mm hg/0-689kpa]	9837760	WIKA
4002	WIG-2	TEMPERATURE GAUGE	1	Temperature Gauge 0-250°F [-20-120°C]	95240D006G4	WIKA
4003	WIG-3A WIG-3B WIG-3C WIG-3D	PRESSURE GAUGE	4	Pressure Gauge 0-1000psig [0-6895kpa]	938066	WIKA
4004	WIG-4	DIFFERENTIAL PRESSURE GUAGE	1	Pressure Gauge 0-25psig [0-172kpa]	120SC-12-00	MID-WEST
5001	FW1-2	Y-STRAINER	1	2"x150# w/80 MESH		MUELLER
5002	FW2-2	WI FILTER CARTRIDGE	2	Filter Cartridge	PH520-01-CG	HILLIARD
5003	FW1-1	WI FILTER w/ TRANSFER VALVE	1	3"x600#	52HMF-46900230	HILLIARD
5004	FW1-3	CONE STRAINER	1	Stariner	BS600CS	FABROTECH
6001	63WN-1	INLET PRESSURE	1	Pressure Switch 30"HG/0-100psig [460mm HG/0-689kpa]	56AG-AF216-M4-C1A	SOR
6002	63WN-3	WI FILTER DIFFERENTIAL PRESSURE	1	Pressure Switch	101AG-AF3-M4-C1A	SOR
6003	26JS-1	TEMPERATURE SWITCH	1	TEMP HL	201AG-AF125-U9-C7A	SOR
6004	26JS-2	TEMPERATURE SWITCH	1	TEMP HH	201AG-AF125-U9-C7A	SOR
7001	96WP-1	PRESSURE TRANSMITTER	1	WI SKID DISCHARGE PRESSURE	3051CG5A22A1AB4Q4	ROSEMOUNT
9003	88JS-1	COOLING FAN RECEPTICAL	1			
9014	AL-58	LIGHT FIXTURE	3		NFL4232/UNV	
	AS-28	AC SWITCH	1			
	AR-41	GFCI SOCKET OUTLET	1			
	CB2	A/C RECEPTICAL	1			

REV.	FECHA	REVISIONES O MODIFICACIONES	DIBUJO	REVISO	APROBO
1	14/09/11	ISSUED FOR CONSTRUCTION	SAB	CB	TK
0	13/07/11	ISSUED FOR FABRICATION	SAB	CB	TK

REF. FABRICANTE		
REF. FABRICANTE	FABRICANTE	Q/C:

AGM-02-0204-PLA-I-0046	DEVICE SUMMARY	
AGM-02-0204-PLA-G-0060	FLOW & PROCESS SPECIFICATIONS	
AGM-02-0204-PLA-M-0041	WATER INJECTION SKID - GENERAL ARRANGEMENT	
AGM-02-0204-PLA-P-0009	PROCESS FLOW DIAGRAM	
N° DE DOCUMENTO	DESCRIPCIÓN	REV. / FECHA

DOCUMENTOS DE REFERENCIA

DERWICK — ProEnergy — CORPOELEC — La Electricidad de Caracas — SENECA

CAPACITY EXPANSION OF ELECTRICITY GENERATION AND TRANSPORT IN THE ISLAND OF MARGARITA

DEMIN WATER FORWARDING/INJECTION SYSTEM P&ID
DUAL FUEL MOD. UNITS 298034 & 298035
(WATER INJECTION SKID X405A & X405B)

PLANO N°:	REV:		
PROYECTO N°: 409-2956-1			
CALCULO:	PROYECTO:	ESCALA: NONE	PLANO No:
REVISADO: C. Brown	CALCULO:	FECHA: 14/09/11	AGM-02-0204-PLA-P-0047
DIBUJO: S. Boerckel	REVISADO: J. Castillo	DISK. N°	
APROBADO: T. Koontz	DIBUJO:	ESC./PLOTED:	
ARCHIVO:	APROBADO: M. Monticelli	ARCHIVO:	PAGINA: 4 DE: 4 — REV: 1

F_AO_11 - 1189x841mm

LINEA DE CORTE DE COPIA
LINEA DE CORTE DE ORIGINAL

N° PLANO: AGM-02-0204-PLA-P-0048 | 0

NOTES:

1. SEE AGM-02-0204-PLA-I-0046 (DEVICE SUMMARY) MLI 0414 FOR CONTROL DEVICE SETTINGS.
2. XXXX = 1004 FOR UNIT-1 & 1005 FOR UNIT-2.
3. SUCTION PIPING FROM TANK TO SKID DESIGNED ACCORDING TO BEST PRACTICES TO REDUCE TURBULENCE AND AIR ENTRAPMENT – FLOODED SUCTION REQUIRED. 2psi MIN REQUIRMENT AT FLANGE FOR SKID LOSSES.

ALL DIMENSIONS IN BRACKETS [ ] ARE MILLIMETER; EXPRESSED DIMENSIONS ARE INCHES

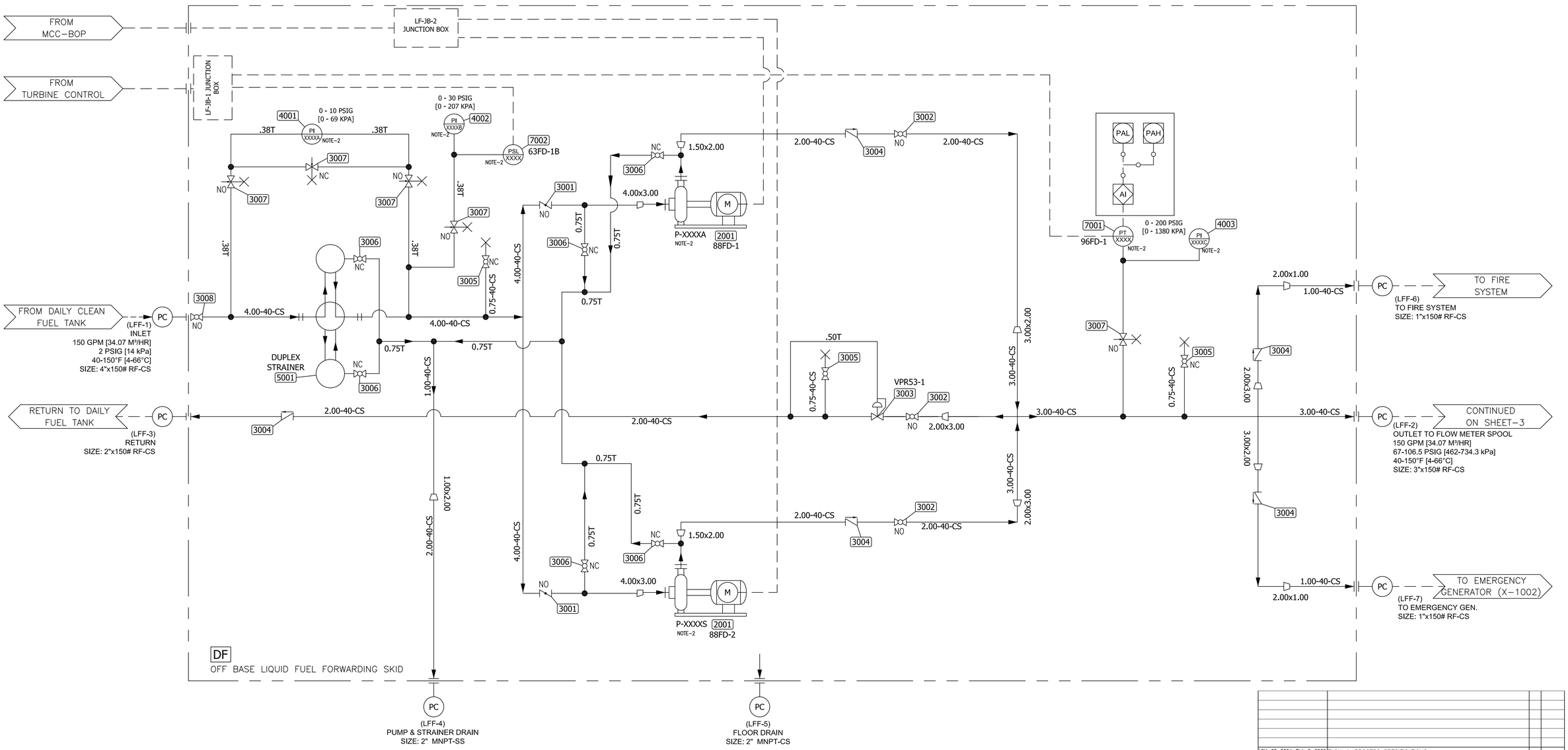

N° DE DOCUMENTO	DESCRIPCIÓN	REV.	FECHA
AGM-02-0204-PLA-G-0060	FLOW & PROCESS SPECIFICATIONS		
AGM-02-0204-PLA-I-0046	DEVICE SUMMARY		
AGM-02-0204-PLA-M-0034	LIQUID FUEL FORWARDING SKID – GENERAL ARRANGEMENT		
AGM-02-0204-PLA-P-0009	PROCESS FLOW DIAGRAM		

DOCUMENTOS DE REFERENCIA

REV.	FECHA	REVISIONES O MODIFICACIONES	DIBUJO	REVISO	APROBO
0	14/09/11	ISSUED FOR CONSTRUCTION	SAB	CB	TK
B	13/07/11	ISSUED FOR CONSTRUCTION	SAB	CB	TK
A	11/03/11	ISSUED FOR REVIEW	SAB	CB	TK

REF. FABRICANTE		
REF. FABRICANTE	FABRICANTE	O/C:

DERWICK ASSOCIATES CORP. | ProEnergy SERVICES | CORPOELEC | La Electricidad de Caracas | GERENCIA FUNCIONAL DE INGENIERIA Y PROYECTOS | SENECA

AMPLIACIÓN DE LA CAPACIDAD DE GENERACIÓN Y TRANSPORTE DE ELECTRICIDAD EN LA ISLA DE MARGARITA

LIQUID FUEL SYSTEM P&ID
DUAL FUEL MOD. UNITS 298034 & 298035
(LIQUID FUEL FORWARDING SKID P-1004A/S & P-1005A/S)

PLANO N°:	REV:		
PROYECTO N°: 409-2956-1			
CALCULO:	PROYECTO:	ESCALA: NONE	PLANO No:
REVISADO: C. Brown	CALCULO:	FECHA: 14/09/11	AGM-02-0204-PLA-P-0048
DIBUJO: S. Boerckel	REVISADO: J. Castillo	DISK. N°	
APROBADO: T. Koontz	DIBUJO:	ESC./PLOTEO:	
ARCHIVO:	APROBADO: M. Monticelli	ARCHIVO:	PAGINA: 1 DE: 6 — REV. 0

F_A1_11 – 841x594mm

N° PLANO: AGM-02-0204-PLA-P-0048 | 0

NOTES:

1. SEE AGM-02-0204-PLA-I-0046 (DEVICE SUMMARY) MLI 0414 FOR CONTROL DEVICE SETTINGS.
2. QTY'S ARE PER UNIT.

ALL DIMENSIONS IN BRACKETS [ ] ARE MILLMETER; EXPRESSED DIMENSIONS ARE INCHES

PARTS LIST FOR LIQUID FUEL FORWARDING SKID (SHEET-1)

ITEM	TAG No UNIT-1	TAG No UNIT-2	DEVICE No	DEVICE	QTY (NOTE:2)	DESCRIPTION	CATALOG No	MANUFACTURER
2001	P-1004A P-1004S	P-1005A P-1005S	88FD-1 88FD-2	PUMP MOTOR ASSEMBLY	2	MODEL 1K3X1.5-8RV DURCO MARK 3 PUMP (20HP) w/150# ANSI FF FLANGES (Type A BASE)	1K3x1.5-82RV M3 ST	FLOWSERVE
3001	LFFV-1A LFFV-1B			BUTTERFLY VALVE - INLET (PUMP-A) BUTTERFLY VALVE - INLET (PUMP-S)	2	4" x 150# CS FS DYNACENTRIC HP BFV SERIES B5100, CLASS 150		COOPER CAMERON
3002	LFFV-2A LFFV-2B LFFV-2C			BALL VALVE - DISCHARGE (PUMP-A) BALL VALVE - DISCHARGE (PUMP-S) BALL VALVE - RETURN TO TANK	3	2" x 150# CS FS BALL VALVE - ANSI		
3003	LFFV-3		VPR53-1	BACKP PRESSURE VALVE	1	2" x 150# CS FS BACKP PRESSURE VALVE - 63EG	2x63EG	FISHER
3004	LFFV-4A LFFV-4B LFFV-4C LFFV-4D LFFV-4E			CHECK VALVE - DISCHARGE (PUMP-A) CHECK VALVE - DISCHARGE (PUMP-S) CHECK VALVE - RETURN TO TANK CHECK VALVE - DISCHARGE (DEISEL TANK) CHECK VALVE - DISCHARGE (EMERGENCY GENERATOR)	5	2" DUO CHECK VALVE		
3005	LFFV-5A LFFV-5B LFFV-5C			BALL VALVE - VENT (INLET) BALL VALVE - VENT (DISCHARGE) BALL VALVE - VENT (RETURN TO TANK)	3	3/4" FNPT FS BALL VALVE	SS-A65TF12	SWAGELOK
3006	LFFV-6A LFFV-6B LFFV-6C LFFV-6D LFFV-6E LFFV-6F			BALL VALVE - INLET DRAIN (PUMP-A) BALL VALVE - INLET DRAIN (PUMP-S) BALL VALVE - DISCHARGE DRAIN (PUMP-A) BALL VALVE - DISCHARGE DRAIN (PUMP-S) BALL VALVE - DRAIN (STRAINER) BALL VALVE - DRAIN (STRAINER)	4	3/4" FS SS SWAGE BALL VALVE	SS-A65TS12	SWAGELOK
3007	LFFV-7A LFFV-7B LFFV-7C LFFV-7D LFFV-7E			GAGE VALVE - INLET PRESSURE GAGE VALVE - DISCHARGE PRESSURE GAGE VALVE - PRESSURE DIFFERENTIAL UP STREAM GAGE VALVE - PRESSURE DIFFERENTIAL DOWN STREAM GAGE VALVE - PRESSURE DIFFERENTIAL EQUIALIZER	5	1/4" FNPT GAGE VALVE w/ STEM TEST		DRAGON
3008	LFFV-8			BALL VALVE - INLET	1	4" x 150# CS FS BALL VALVE - ANSI		
4001	PI-1004A	PI-1005A		DIFFERENTIAL PRESSURE GAGE	1	4.5" GAGE FLUSH MOUNT BACK CONN. 1/4" MNPT 0-10 PSIG		MID-WEST
4002	PI-1004B	PI-1005B		SUCTION PRESSURE GAGE	1	4.5" GAGE FLUSH MOUNT LOWER CONN. 1/4" MNPT 0-30 PSIG	7112-G030	DWYER
4003	PI-1004C	PI-1005C		DISCHARGE PRESSURE GAGE	1	4.5" GAGE FLUSH MOUNT LOWER CONN. 1/4" MNPT 0-200 PSIG	7112-G200	DWYER
5001	LFFF-1			DUPLEX STRAINER	1	DUPLEX STRAINER CAST IRON w/4" x 150# FLANGED CONN. (1/16" PERF. BASKETS)		
7001	PT-1004	PT-1005	96FD-1	PRESSURE TRANSMITTER	1	ROSEMOUNT 3051 SERIES PT 0-200 PSIG	3051TG2A2A21AB4C6	ROSEMOUNT
7002	PSL-1004	PSL-1005	63FD-1B	PRESSURE SWITCH LOW	1	PRESSURE & VACUUM SWITCH 40-0-40 IN WC	52NN-K117-M1-B2A-TT	SOR

REV.	FECHA	REVISIONES O MODIFICACIONES	DIBUJO	REVISO	APROBO
0	14/09/11	ISSUED FOR CONSTUCTION	SAB	CB	TK
B	13/07/11	ISSUED FOR CONSTRUCTION	SAB	CB	TK
A	11/03/11	ISSUED FOR REVIEW	SAB	CB	TK

REF. FABRICANTE		
REF. FABRICANTE	FABRICANTE	O/C:

N° DE DOCUMENTO	DESCRIPCIÓN	REV.	FECHA
AGM-02-0204-PLA-G-0060	FLOW & PROCESS SPECIFICATIONS		
AGM-02-0204-PLA-I-0046	DEVICE SUMMARY		
AGM-02-0204-PLA-M-0034	LIQUID FUEL FORWARDING SKID - GENERAL ARRANGEMENT		
AGM-02-0204-PLA-P-0009	PROCESS FLOW DIAGRAM		

DOCUMENTOS DE REFERENCIA

DERWICK ASSOCIATES CORP. | ProEnergy | CORPOELEC | La Electricidad de Caracas | SENECA

AMPLIACIÓN DE LA CAPACIDAD DE GENERACIÓN Y TRANSPORTE DE ELECTRICIDAD EN LA ISLA DE MARGARITA

LIQUID FUEL SYSTEM P&ID
DUAL FUEL MOD. UNITS 298034 & 298035
(LIQUID FUEL FORWARDING SKID P-1004A/S & P-1005A/S)

PLANO N°:	REV:		
PROYECTO N°: 409-2956-1			
CALCULO:	PROYECTO:	ESCALA: NONE	PLANO No: AGM-02-0204-PLA-P-0048
REVISADO: C. Brown	CALCULO:	FECHA: 14/09/11	
DIBUJO: S. Boerckel	REVISADO: J. Castillo	DISK. N°	
APROBADO: T. Koontz	DIBUJO:	ESC./PLOTEO:	
ARCHIVO:	APROBADO: M. Monticelli	ARCHIVO:	PAGINA: 2 DE: 6 REV. 0

F_A1_11 - 841x594mm

N° PLANO: AGM-02-0204-PLA-P-0048 / 0

NOTES:

1. SEE AGM-02-0204-PLA-I-0046 (DEVICE SUMMARY) MLI 0414 FOR CONTROL DEVICE SETTINGS.
2. XXXX = 1004 FOR UNIT-1 & 1005 FOR UNIT-2.

ALL DIMENSIONS IN BRACKETS [ ] ARE MILLIMETER; EXPRESSED DIMENSIONS ARE INCHES

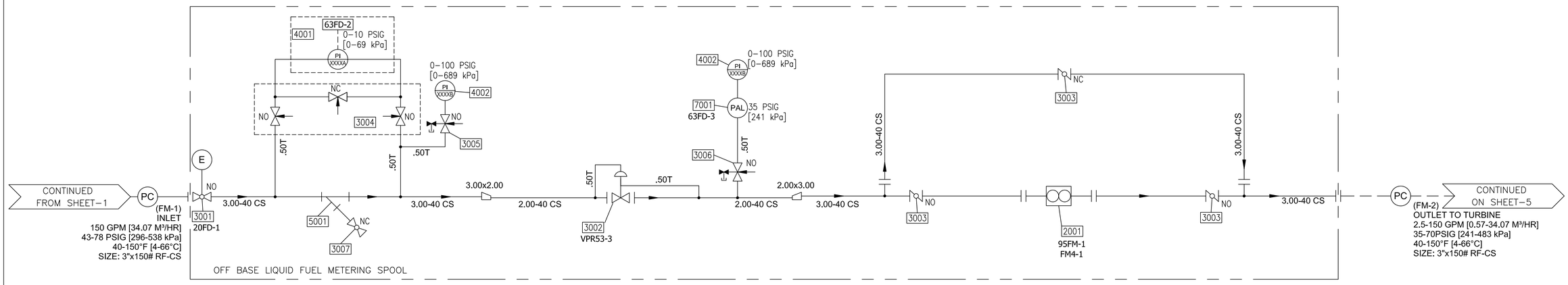

REV.	FECHA	REVISIONES O MODIFICACIONES	DIBUJO	REVISO	APROBO
0	14/09/11	ISSUED FOR CONSTRUCTION	SAB	CB	TK
B	13/07/11	ISSUED FOR CONSTRUCTION	SAB	CB	TK
A	11/03/11	ISSUED FOR REVIEW	SAB	CB	TK

REF. FABRICANTE		
REF. FABRICANTE	FABRICANTE	O/C:

N° DE DOCUMENTO	DESCRIPCIÓN	REV.	FECHA
AGM-02-0204-PLA-G-0060	FLOW & PROCESS SPECIFICATIONS		
AGM-02-0204-PLA-I-0046	DEVICE SUMMARY		
AGM-02-0204-PLA-M-0075	FUEL MANAGEMENT MECHANICAL ARRANGEMENT		
AGM-02-0204-PLA-P-0009	PROCESS FLOW DIAGRAM		

DOCUMENTOS DE REFERENCIA

DERWICK ASSOCIATES CORP. · ProEnergy SERVICES · CORPOELEC · La Electricidad de Caracas · GERENCIA FUNCIONAL DE INGENIERIA Y PROYECTOS · SENECA

AMPLIACIÓN DE LA CAPACIDAD DE GENERACIÓN Y TRANSPORTE DE ELECTRICIDAD EN LA ISLA DE MARGARITA

LIQUID FUEL SYSTEM P&ID
DUAL FUEL MOD. UNITS 298034 & 298035
(FUEL MANAGEMENT SPOOL F-1004 & F-1005)

PLANO N°:	REV:		
PROYECTO N°: 409-2956-1			
CALCULO:	PROYECTO:	ESCALA: NONE	PLANO No: AGM-02-0204-PLA-P-0048
REVISADO: C. Brown	CALCULO:	FECHA: 14/09/11	
DIBUJO: S. Boerckel	REVISADO: J. Castillo	DISK. N°	
APROBADO: T. Koontz	DIBUJO:	ESC./PLOTEO:	
ARCHIVO:	APROBADO: M. Monticelli	ARCHIVO:	PAGINA: 3 DE: 6 — REV. 0

F_A1_11 – 841x594mm

LINEA DE CORTE DE ORIGINAL
LINEA DE CORTE DE COPIA

0 — N° PLANO: AGM-02-0204-PLA-P-0048

NOTES:

1. SEE AGM-02-0204-PLA-I-0046 (DEVICE SUMMARY) MLI 0414 FOR CONTROL DEVICE SETTINGS.
2. QTY'S ARE PER UNIT.

ALL DIMENSIONS IN BRACKETS [ ] ARE MILLMETER; EXPRESSED DIMENSIONS ARE INCHES

PARTS LIST FOR LIQUID FUEL METERING SPOOL (SHEET-3)

ITEM	TAG No UNIT-1	TAG No UNIT-2	DEVICE No	DEVICE	QTY (NOTE:2)	DESCRIPTION	PART No	MANUFACTURER
2001	FMM-1	FMM-1	95FM-1 FM4-1	FLOWMETER	1	FLOWMETER MODEL B-72D 425 GPM - 3"x150#	B070ACAAAACDAEA	BRODIE
3001	FMV-1	FMV-1	20FD-2	STOP VALVE	1	FAIL SAFE ELECTRIC ACTUATED BALL VALVE 3"x150#	CRC733F-3F	CR-TEC
3002	FMV2	FMV2	VPR53-3	PRESSURE REGULATOR VALVE	1	PRESSURE REDUCING REGULATOR VALVE 2"x150#	FS1098-472/15RF2/L/WS1	FISCHER
3003	FMV-3A FMV-3B FMV-3C	FMV-3A FMV-3B FMV-3C		BUTTERFLY VALVE - METER INLET BUTTERFLY VALVE - METER OUTLET BUTTERFLY VALVE - METER BY-PASS	3	SERIES B5100 HIGH PERFORMANCE BUTTERFLY VALVE - 3"	B5110-02-F02-13/HL	CAMRON
3004	FMV-4	FMV-4		3-WAY NEEDLE VALVE	1	1/2" FNPT 3-WAY NEEDLE VALVE	SS-V3NBF8	SWAGELOK
3005	FMV-5	FMV-5		BLOCK & BLEED NEEDLE VALVE	1	1/2" FNPT BLOCK & BLEED VALVE	SS-V2NBF8	SWAGELOK
3006	FMV-6	FMV-6		GAUGE VALVE ASSEMBLY	3	GAUGE VALVE 1/2" MNPT - 1/2" FNPT 1/2" MNPT BLEED PLUG 1/2" x 1/4" NPT BUSHING	M5VDC-44 V6VDC-4	ANDERSON GREENWOOD ANDERSON GREENWOOD
3007	FMV-7	FMV-7		BALL VALVE	1	3/4" FNPT BALL VALVE FIRE SAFE	SS-A65TF-12	SWAGELOK
4001	PI-1004A	PI-1005A	63FD-2	DIFFERENTIAL PRESSURE GAUGE	1	4.5" GAUGE 1/4" FNPTEND CONNECTIONS 0-10 PSID	120SC-12-00	MID-WEST
4002	PI-1004B	PI-1005B		PRESSURE GUAGE	2	4.5" PRESSURE GAUGE SS 1/2" MNPT 0-200 PSIG	SGL-G0724N	DWYER
5001	FMS-1	FMS-1		STRAINER	1	80-MESH Y-STRAINER 3"x150# CAST STAINLESS	781-CS	MUELLER
7001	FMPS-1	FMPS-1	63FD-3	PRESSURE SWITCH	1	SPDT SWITCH 35 PSIG	611G8005	CCS

N° DE DOCUMENTO	DESCRIPCIÓN	REV.	FECHA
AGM-02-0204-PLA-G-0060	FLOW & PROCESS SPECIFICATIONS		
AGM-02-0204-PLA-I-0046	DEVICE SUMMARY		
AGM-02-0204-PLA-M-0075	FUEL MANAGEMENT MECHANICAL ARRANGEMENT		
AGM-02-0204-PLA-P-0009	PROCESS FLOW DIAGRAM		

DOCUMENTOS DE REFERENCIA

REV.	FECHA	REVISIONES O MODIFICACIONES	DIBUJO	REVISO	APROBO
D	14/09/11	ISSUED FOR CONSTRUCTION	SAB	CB	TK
B	13/07/11	ISSUED FOR CONSTRUCTION	SAB	CB	TK
A	11/03/11	ISSUED FOR REVIEW	SAB	CB	TK

REF. FABRICANTE		
REF. FABRICANTE	FABRICANTE	O/C:

DERWICK ASSOCIATES CORP. — ProEnergy SERVICES — CORPOELEC — La Electricidad de Caracas — GERENCIA FUNCIONAL DE INGENIERIA Y PROYECTOS — SENECA

AMPLIACIÓN DE LA CAPACIDAD DE GENERACIÓN Y TRANSPORTE DE ELECTRICIDAD EN LA ISLA DE MARGARITA

LIQUID FUEL SYSTEM P&ID
DUAL FUEL MOD. UNITS 298034 & 298035
(FUEL MANAGEMENT SPOOL F-1004 & F-1005)

PLANO N°:	REV:		
PROYECTO N°: 409-2956-1			
CALCULO:	PROYECTO:	ESCALA: NONE	PLANO No: AGM-02-0204-PLA-P-0048
REVISADO: C. Brown	CALCULO:	FECHA: 14/09/11	
DIBUJO: S. Boerckel	REVISADO: J. Castillo	DISK. N°	
APROBADO: T. Koontz	DIBUJO:	ESC./PLOTEO:	
ARCHIVO:	APROBADO: M. Monticelli	ARCHIVO:	PAGINA: 4 DE: 6 — REV. 0

F_A1_11 - 841x594mm

LINEA DE CORTE DE COPIA
LINEA DE CORTE DE ORIGINAL

LINEA DE CORTE DE ORIGINAL
LINEA DE CORTE DE COPIA

N° PLANO: AGM-02-0204-PLA-P-0048 | 1

NOTES:

1. SEE AGM-02-0204-PLA-I-0046 (DEVICE SUMMARY) MLI 0414 FOR CONTROL DEVICE SETTINGS.
2. SEE 277A2415 FOR SYMBOLOGY
3. PRESSURE LIMITS AT THE TURBINE PURCHASER CONNECTION: MAXIMUM PRESSURE 70 PSIG (483 kPa)
   MINIMUM PRESSURE 35 PSIG (241 kPa)
   AT A FLOW RATE OF 2.5 TO 150 GPM (9.46 TO 2.15 M^3/HR). PRESSURE OSCILLATIONS ARE NOT TO EXCEED 10 PSIG IN 10 SECONDS AT STARTUP AND 8 PSIG PER MINUTE [55 kPa PER MINUTE] AFTER IGNITION.
4. THE VALVE IN THE CROSSOVER FILL LINE MUST BE OPEN TO EQIUALIZE THE PRESSURE IN BOTH FILTERS PRIOR TO OPERATING THE FILTER TRANSFER VALVE.
5. CONICAL STRAINER WITH PRESSURE DIFFERENTIAL ALARM. STRAINER TO BE INSTALLED WITH CONE POINT FACING DOWNSTREAM. ALARM(S) FROM DIFFERENTIAL PRESSURE SWITCH INDICATES BLOCKAGE ACROSS STRAINER(S).
6. THIS PURCHASER'S CONNECTION MUST BE CONNECTED TO AN UNPRESSURIZED SUMP AND REMAIN OPEN.
7. IF LIQUID FUEL SYSTEM IS TO NOT BE UTILIZED FOR AN EXTENDED PERIOD OF TIME, THE PROCEDURE FOR LIQUID FUEL POSTPONEMENT MUST BE COMPLETED. PLEASE SEE COMPLIMENTARY DOCUMENT 372A3077 AND RED FLAG REVIEW.
8. SYSTEM PAREMETERS AND SPECIFICATIONS ARE BASED ON GE DRAWING 361B5922 (PROVIDED BY CUSTOMER). INCLUDING REQUIREMENTS FOR DUAL FUEL SYSTEM PER CUSTOMER SCOPE OF WORK.

IMPORTANTE

ESTE PLANO FUE ELABORADO EN AUTOCAD V.2008
CUALQUIER MODIFICACION REALIZADA EN CAMPO DEBERA SER NOTIFICADO A LA UNIDAD RESPONSABLE.
QUEDA PROHIBIDO CORREGIR ESTE PLANO SIN AUTORIZACION DE ESTA UNIDAD.

ALL DIMENSIONS IN BRACKETS [ ] ARE MILLMETER; EXPRESSED DIMENSIONS ARE INCHES

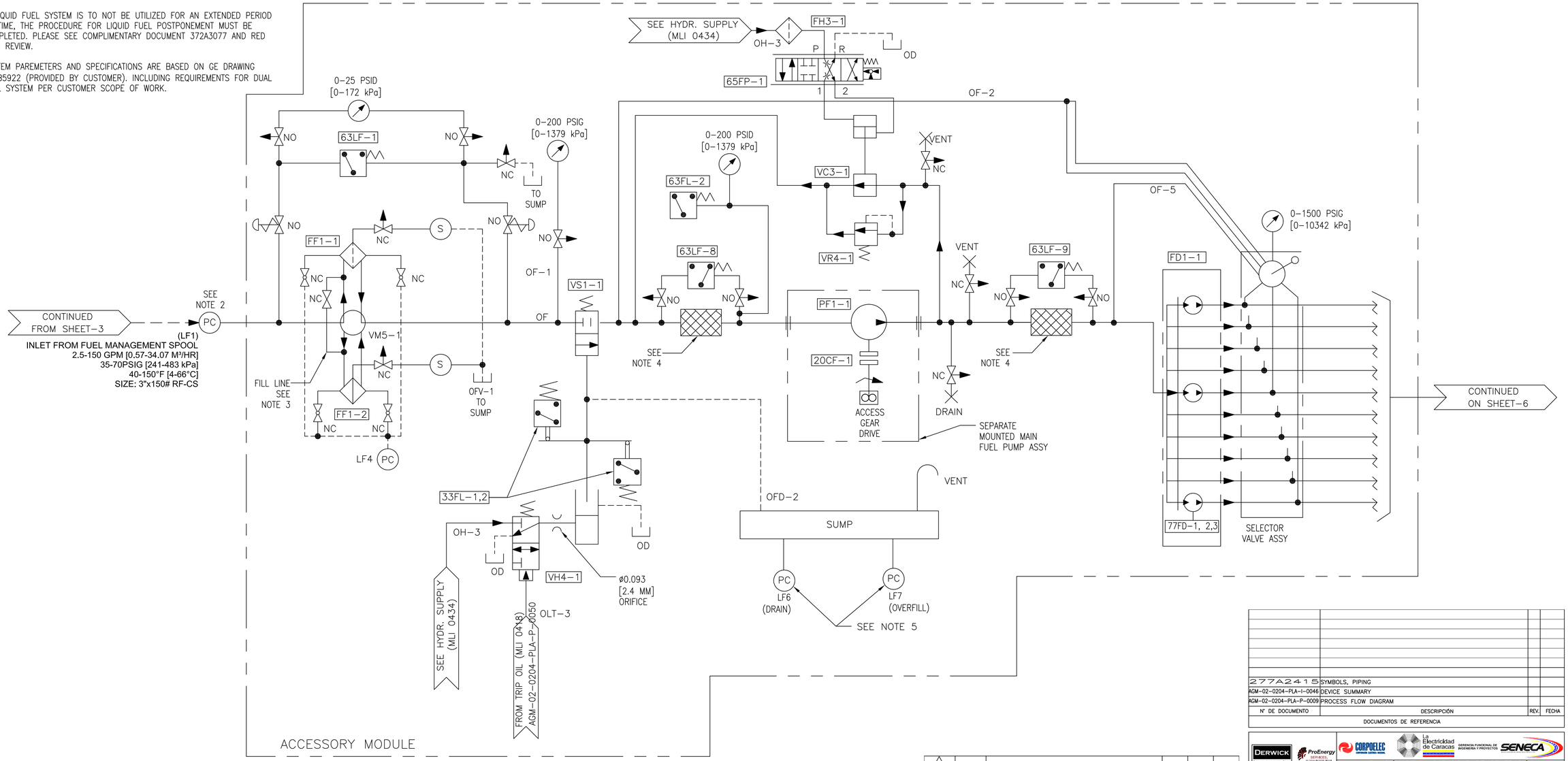

N° DE DOCUMENTO	DESCRIPCIÓN	REV.	FECHA
277A2415	SYMBOLS, PIPING		
AGM-02-0204-PLA-I-0046	DEVICE SUMMARY		
AGM-02-0204-PLA-P-0009	PROCESS FLOW DIAGRAM		

DOCUMENTOS DE REFERENCIA

REV.	FECHA	REVISIONES O MODIFICACIONES	DIBUJO	REVISO	APROBO
1	14/09/11	ISSUED FOR CONSTRUCTION	SAB	CB	TK
0	13/07/11	ISSUED FOR CONSTRUCTION, SEE NOTE:8	SAB	CB	TK

REF. FABRICANTE	FABRICANTE	O/C:
REF. FABRICANTE		

DERWICK · ProEnergy SERVICES · CORPOELEC · La Electricidad de Caracas · GERENCIA FUNCIONAL DE INGENIERIA Y PROYECTOS · SENECA

AMPLIACIÓN DE LA CAPACIDAD DE GENERACIÓN Y TRANSPORTE DE ELECTRICIDAD EN LA ISLA DE MARGARITA

LIQUID FUEL SYSTEM P&ID
DUAL FUEL MOD. UNITS 298034 & 298035
(LIQUID FUEL SYSTEM – MLI 0424)

PLANO N°:	REV:		
PROYECTO N°: 409-2956-1			
CALCULO:	PROYECTO:	ESCALA: NONE	PLANO No: AGM-02-0204-PLA-P-0048
REVISADO: C. Brown	CALCULO:	FECHA: 14/09/11	
DIBUJO: S. Boerckel	REVISADO: J. Castillo	DISK. N°	
APROBADO: T. Koontz	DIBUJO:	ESC./PLOTEO:	
ARCHIVO:	APROBADO: M. Monticelli	ARCHIVO:	PAGINA: 5 DE: 6 — REV. 1

F_A1_11 – 841x594mm

LINEA DE CORTE DE COPIA
LINEA DE CORTE DE ORIGINAL

LINEA DE CORTE DE ORIGINAL
LINEA DE CORTE DE COPIA

N° PLANO: AGM-02-0204-PLA-P-0048 | 1

IMPORTANTE

ESTE PLANO FUE ELABORADO EN AUTOCAD V.2008
CUALQUIER MODIFICACION REALIZADA EN CAMPO DEBERA SER NOTIFICADO A LA UNIDAD RESPONSABLE.
QUEDA PROHIBIDO CORREGIR ESTE PLANO SIN AUTORIZACION DE ESTA UNIDAD.

ALL DIMENSIONS IN BRACKETS [ ] ARE MILLMETER; EXPRESSED DIMENSIONS ARE INCHES

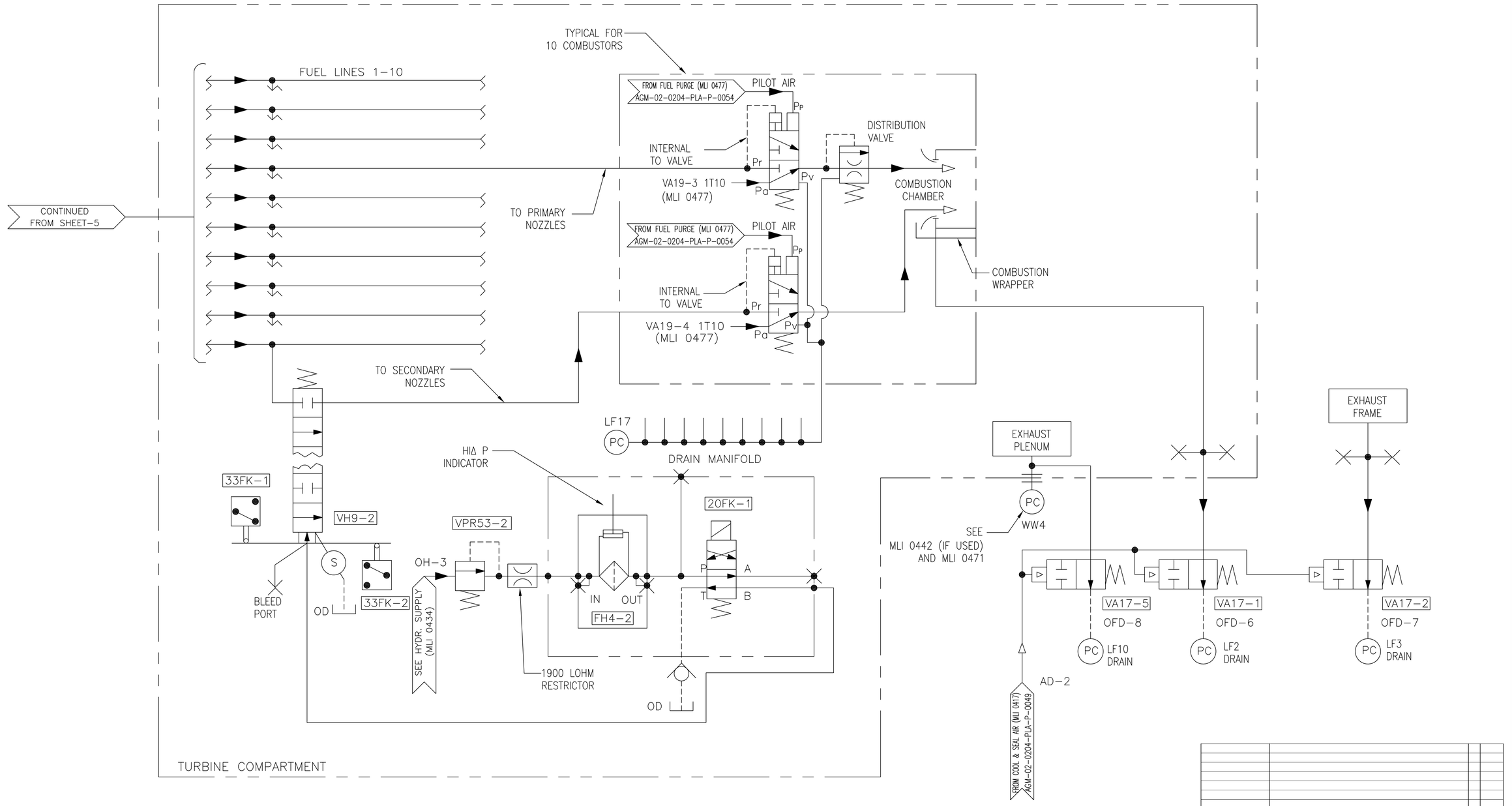

N° DE DOCUMENTO	DESCRIPCIÓN	REV.	FECHA
277A2415	SYMBOLS, PIPING		
AGM-02-0204-PLA-I-0046	DEVICE SUMMARY		
AGM-02-0204-PLA-P-0009	PROCESS FLOW DIAGRAM		

DOCUMENTOS DE REFERENCIA

REV.	FECHA	REVISIONES O MODIFICACIONES	DIBUJO	REVISO	APROBO
1	14/09/11	ISSUED FOR CONSTRUCTION	SAB	CB	TK
0	13/07/11	ISSUED FOR CONSTRUCTION, SEE NOTE:8 – SHT:5	SAB	CB	TK

REF. FABRICANTE		
REF. FABRICANTE	FABRICANTE	O/C:

DERWICK ASSOCIATES CORP. | ProEnergy SERVICES | CORPOELEC | La Electricidad de Caracas | GERENCIA FUNCIONAL DE INGENIERIA Y PROYECTOS | SENECA

AMPLIACIÓN DE LA CAPACIDAD DE GENERACIÓN Y TRANSPORTE DE ELECTRICIDAD EN LA ISLA DE MARGARITA

LIQUID FUEL SYSTEM P&ID
DUAL FUEL MOD. UNITS 298034 & 298035
(LIQUID FUEL SYSTEM – MLI 0424)

PLANO N°: | REV:
PROYECTO N°: 409-2956-1

CALCULO:	PROYECTO:	ESCALA: NONE	PLANO No: AGM-02-0204-PLA-P-0048
REVISADO: C. Brown	CALCULO:	FECHA: 14/09/11	
DIBUJO: S. Boerckel	REVISADO: J. Castillo	DISK. N°	
APROBADO: T. Koontz	DIBUJO:	ESC./PLOTEO:	
ARCHIVO:	APROBADO: M. Monticelli	ARCHIVO:	PAGINA: 6 DE: 6 — REV. 1

F_A1_11 – 841x594mm

LINEA DE CORTE DE COPIA
LINEA DE CORTE DE ORIGINAL

N° PLANO: AGM-02-0204-PLA-P-0050 (0)

NOTES:

1. SEE AGM-02-0204-PLA-I-0046 (DEVICE SUMMARY) MLI 0414 FOR CONTROL DEVICE SETTINGS.
2. (0) SYSTEM PARAMETERS AND SPECIFICATIONS ARE BASED ON GE DRAWING 355B8686 (PROVIDED BY CUSTOMER). INCLUDING REQUIREMENTS FOR DUAL FUEL SYSTEMS PER CUSTOMER SCOPE OF WORK.

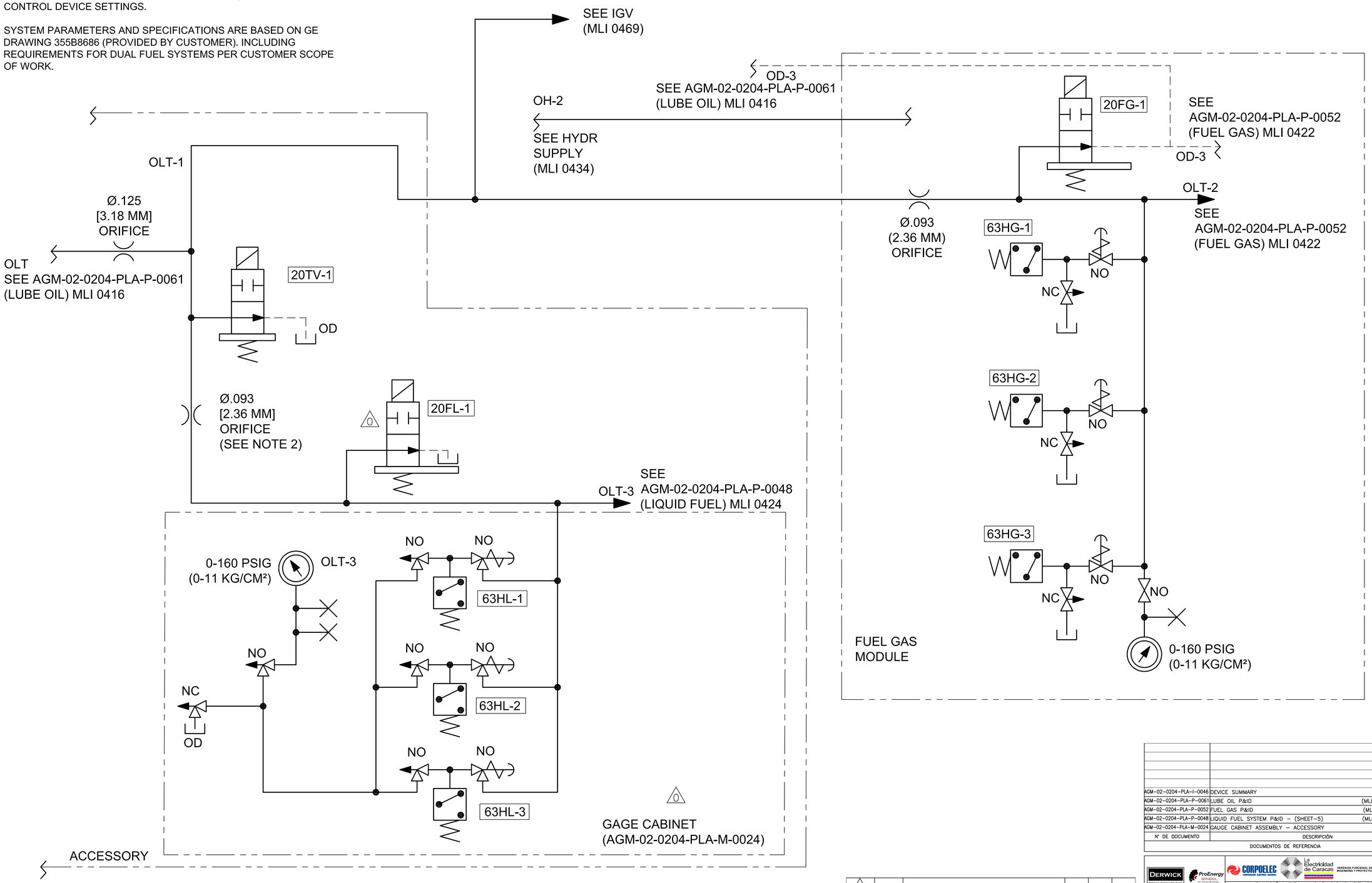

N° DE DOCUMENTO	DESCRIPCIÓN		REV.	FECHA
AGM-02-0204-PLA-I-0046	DEVICE SUMMARY			
AGM-02-0204-PLA-P-0061	LUBE OIL P&ID	(MLI 0416)		
AGM-02-0204-PLA-P-0052	FUEL GAS P&ID	(MLI 0422)		
AGM-02-0204-PLA-P-0048	LIQUID FUEL SYSTEM P&ID – (SHEET-5)	(MLI 0424)		
AGM-02-0204-PLA-M-0024	GAUGE CABINET ASSEMBLY – ACCESSORY			

DOCUMENTOS DE REFERENCIA

REV.	FECHA	REVISIONES O MODIFICACIONES	DIBUJO	REVISO	APROBO
0	07/07/11	ISSUED FOR CONSTRUCTION; SEE NOTE 2	SAB	CB	TK

REF. FABRICANTE		
REF. FABRICANTE	FABRICANTE	O/C:

DERWICK ASSOCIATES CORP. · ProEnergy SERVICES · CORPOELEC · La Electricidad de Caracas · GERENCIA FUNCIONAL DE INGENIERIA Y PROYECTOS · SENECA

AMPLIACIÓN DE LA CAPACIDAD DE GENERACIÓN Y TRANSPORTE DE ELECTRICIDAD EN LA ISLA DE MARGARITA

TRIP OIL P&ID
DUAL FUEL MOD. UNITS 298034 & 298035
(MLI 0418)

PLANO N°:	REV:		
PROYECTO N°: 409-2956-1			
CALCULO:	PROYECTO:	ESCALA: NONE	PLANO No: AGM-02-0204-PLA-P-0050
REVISADO: C. Brown	CALCULO:	FECHA: 07/07/11	
DIBUJO: S. Boerckel	REVISADO: J. Castillo	DISK. N°	
APROBADO: T. Koontz	DIBUJO:	ESC./PLOTEO:	
ARCHIVO:	APROBADO: M. Monticelli	ARCHIVO:	PAGINA: 1 DE: 1 REV. 0

F_A1_11 – 841x594mm

N° PLANO: AGM-02-0204-PLA-P-0051 | 0

NOTES:

1. SEE AGM–02–0204–PLA–I–0046 (DEVICE SUMMARY) MLI 0414 FOR CONTROL DEVICE SETTINGS.
2. ONLY ONE LUBE OIL COOLER IS TO BE IN SERVICE DURING NORMAL SYSTEM OPERATION.
3. ORIFICE FLANGES HAVE FOUR PLUGGED TAP UNLESS OTHERWISE SHOWN.
4. RECOMMEND THAT PIPING CLEANLINESS BE VERIFIED BEFORE INSTALLATION.
5. THROTTLING VALVE TO E ADJUSTED TO INDICATED FLOW RATES WITH VTR1–1 & VTR2–1 IN FULL FLOW TO COOLER POSITION.
6. COOLING SYSTEM EQUIPMENT IS DESIGNED TO OPERATE WITH THE FOLLOWING COOLANT:
   50% ETHYLENE GLYCOL AND 50% WATER WITH CORROSION INHIBITORS.
7. APPROXIMATE SYSTEM COOLANT CAPACITY EXCLUDING CUSTOMER SUPPLIED FIELD PIPING IS 1100 GALLONS (4.16 M^3).
8. PIPING DESIGN PARAMETERS: MAXIMUM PRESSURE = 150 PSIG (10.2 kg/cm^2)
   MAXIMUM TEMPERATURE = 200°F (93°C)
9. REFER TO GEI 41004G FOR COOLING WATER RECOMMENDATIONS FOR CLOSED SYSTEMS.
10. PRESSURE DROP CW6–CW7 = 36.0 PSID (2.53 kg/cm^2).
11. FROM CONNECTION CW6–CW7: GAS TURBINE HEAT REJECTION = 95,250 BTU/MIN (1673 KW)
12. MAXIMUM OPERATING SUPPLY PRESSURE: CW6 = 125 PSIG (8.5 kg/cm^2).
    MAXIMUM STATIC SYSTEM PRESSURE (MECHANICAL DESIGN LIMIT): CW6 = 125 PSIG (8.5 kg/cm^2).
13. MAXIMUM ALLOWABLE COOLANT TEMPERATURE AT CW6 = 130°F (54.4°C)
14. COOLANT FLOW RATE: CW6 = 952 GPM (216.22 M^3/HR)
15. ORIFICE IS NOT INTENDED FOR FLOW MEASURING PURPOSES. ORIFICE USED ONLY FOR FLOW CONTROL.
16. FLOW MEASURING ORIFICE AN THROTTLING VALVE SHALL BE SUPPLIED BY THE CUSTOMER IF REQUIRED TO MEET STATED FLOW RATES & PRESSURE.
17. A STRAIGHT PIPE LENGTH UPSTREAM OF THE FLOW MEASURING ORIFICE EQUIVALENT TO 10 (TEN) PIPE DIAMETERS IS RECOMMENDED.
18. COOLANT TEMPERATURE RISE BETWEEN CW6–CW7: 13°F (10.6°C).
19. CUSTOMER SUPPLIED INTERCONNECTING PIPING PRESSURE DROP AT SPECIFIED FLOW RATES NOT TO EXCEED 15 PSI (1 kg/cm^2).
20. CUSTOMER SUPPLIED INTERCONNECTION PIPING TO BE DESIGNED WITH HIGH POINT VENTS AND LOW POINT DRAINS AS APPROPRIATE.
21. SYSTEM PARAMETERS AND SPECIFICATIONS ARE BASED ON GE DRAWING 357B1884 (PROVIDED BY CUSTOMER). INCLUDING REQUIREMENTS FOR DUAL FUEL SYSTEMS PER CUSTOMER SCOPE OF WORK.

IMPORTANTE

ESTE PLANO FUE ELABORADO EN AUTOCAD V.2008
CUALQUIER MODIFICACION REALIZADA EN CAMPO DEBERA SER NOTIFICADO A LA UNIDAD RESPONSABLE.
QUEDA PROHIBIDO CORREGIR ESTE PLANO SIN AUTORIZACION DE ESTA UNIDAD.

ALL DIMENSIONS IN BRACKETS [ ] ARE MILLIMETER. EXPRESSED DIMENSIONS ARE INCHES

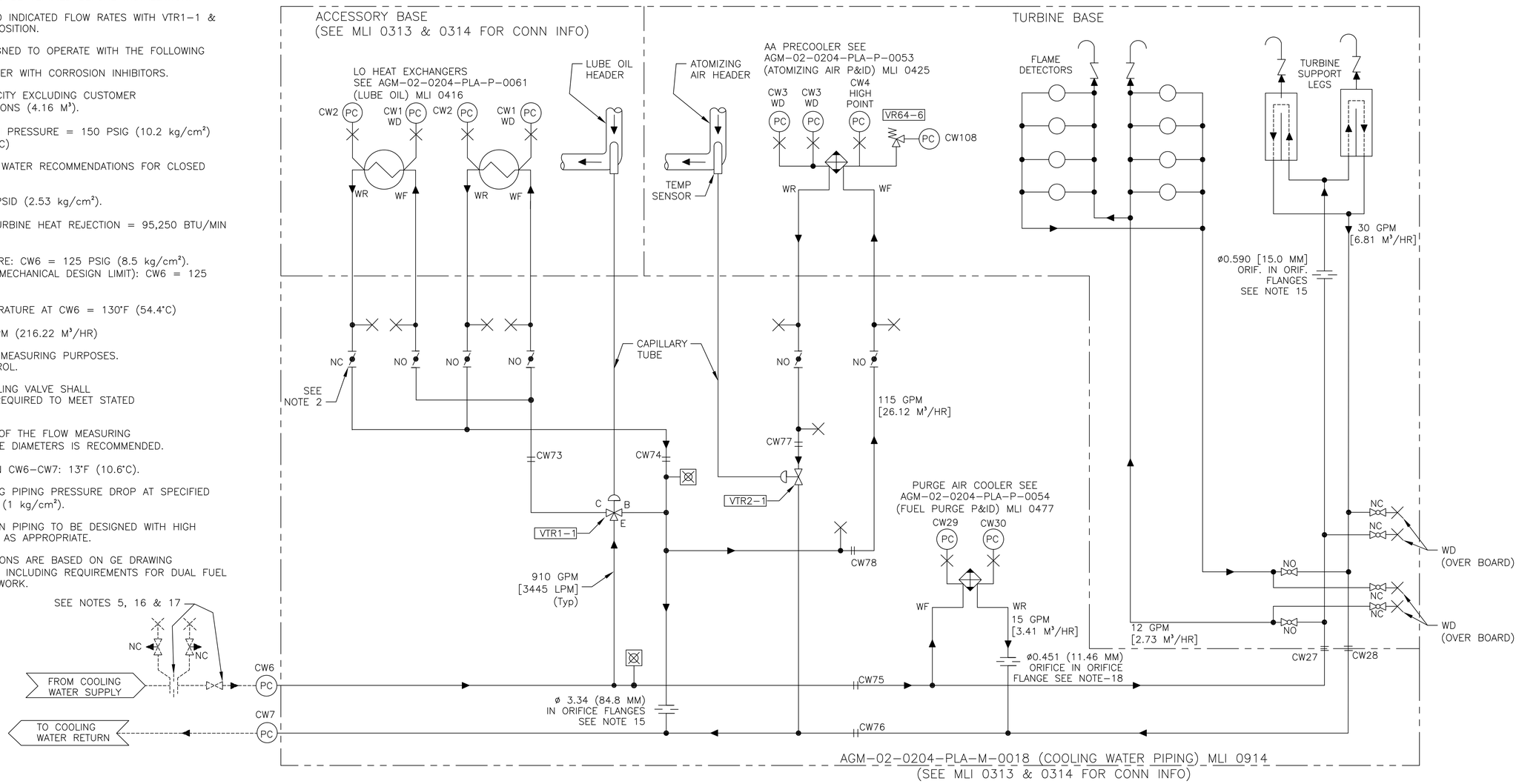

N° DE DOCUMENTO	DESCRIPCIÓN		REV.	FECHA
AGM–02–0204–PLA–P–0053	ATOMIZING AIR P&ID	(MLI 0425)		
AGM–02–0204–PLA–P–0061	LUBE OIL P&ID	(MLI 0416)		
AGM–02–0204–PLA–I–0046	DEVICE SUMMARY	(MLI 0414)		
AGM–02–0204–PLA–M–0018	COOLING WATER – LUBE OIL	(MLI 0914)		
AGM–02–0204–PLA–M–0004	OUTLINE – GT PACKAGE CONNECTIONS – PIPING NOTES	(MLI 0314)		
AGM–02–0204–PLA–M–0003	OUTLINE – GT PACKAGE CONNECTIONS – PIPING	(MLI 0313)		

DOCUMENTOS DE REFERENCIA

REV.	FECHA	REVISIONES O MODIFICACIONES	DIBUJO	REVISO	APROBO
0	07/07/11	ISSUED FOR CONSTRUCTION	SAB	CB	TK

REF. FABRICANTE		
REF. FABRICANTE	FABRICANTE	O/C:

DERWICK ASSOCIATES CORP. | ProEnergy SERVICES | CORPOELEC | La Electricidad de Caracas | GERENCIA FUNCIONAL DE INGENIERÍA Y PROYECTOS | SENECA

AMPLIACIÓN DE LA CAPACIDAD DE GENERACIÓN Y TRANSPORTE DE ELECTRICIDAD EN LA ISLA DE MARGARITA

COOLING WATER P & ID
DUAL FUEL MOD. UNITS 298034 & 298035
(MLI 0420)

PLANO N°:	REV:		
PROYECTO N°: 409–2956–1			
CALCULO:	PROYECTO:	ESCALA: NONE	PLANO No: AGM–02–0204–PLA–P–0051
REVISADO: C. Brown	CALCULO:	FECHA: 07/07/11	
DIBUJO: S. Boerckel	REVISADO: J. Castillo	DISK. N°	
APROBADO: T. Koontz	DIBUJO:	ESC./PLOTEO:	
ARCHIVO:	APROBADO: M. Monticelli	ARCHIVO:	PAGINA: 1 DE: 1 — REV. 0

F_A1_11 – 841x594mm

N° PLANO: AGM-02-0204-PLA-P-0052 | 0

IMPORTANTE

ESTE PLANO FUE ELABORADO EN AUTOCAD V.2008
CUALQUIER MODIFICACION REALIZADA EN CAMPO DEBERA SER NOTIFICADO A LA UNIDAD RESPONSABLE.
QUEDA PROHIBIDO CORREGIR ESTE PLANO SIN AUTORIZACION DE ESTA UNIDAD.

ALL DIMENSIONS IN BRACKETS [ ] ARE MILLIMETER, EXPRESSED DIMENSIONS ARE INCHES

NOTES:

1. SEE 354A3215 FOR P&ID SYMBOL DEFINITION.
2. SEE DEVICE SUMMARY (MLI 0414) FOR DEVICE SETTINGS, RATINGS AND RANGES.
3. INTERFACE POINT IS A POTENTIAL CLASS-1, DIV-1 SOURCE OF NATURAL GAS. THE INSTALLER MUST ROUTE FG3 SEPERATE FROM ALL OTHER VENTS TO AN AREA FREE FROM IGNITION SOURCES.
4. FOLLOW API 14.3/AGA REPORT-3 FOR INSTALLATION AND REQUIREMENTS FOR PIPE LENGTH PRECEDINIG AND FOLLOWING METER TUBE, MG2-1.
5. METER TUBE MG2-1 ORIFICE DIAMETER TO BE DETERMINED BY SUPPIER USING GE ORDERING SHEET DATA. PRESSURE DROP FROM FG20 TO FG21 SHALL BE 5 PSID [34 KPAD].
6. GE SUPPLIED EQUIPMENT UPSTREAM OF FG1, SHALL BE INSTALLED TO MEET EXPLOSION PROOFING REQUIRMENTS OF CLASS-1, GROUP-D, DIVISION-2..
7. BLEED VALVE TO BE OPEN AND EQUALIZER VALVES TO BE CLOSED DURING TURBINE OPERATION TO ENSURE ACCURATE GAS FLOW MEASUREMENTS.
8. A CONCIAL STRAINER IS TO BE FIELD INSTALLED BETWEEN THE GAS VALVE AND THE FUEL GAS MAINFOLD AT A FLANGED LOCATION (AS CLOSE AS POSSIBLE TO THE MANIFOLD). THE STRAINER IS ORIENTED PER MANUFACTURER'S INSTRUCTIONS. REFER TO OPERATING INSTRUCTIONS (MLI A179) FOR ADMINISTRATIVE GUIDELINES ON REMOVAL OF THE STRAINER TO VERIFY SYSTEM CLEANLINESS. A NEW GASKET MUST BE INSTALED FOLLOWING THE REMOVAL OF THE STRAINER.
9. CONSULT THE SERVICE MANUAL FOR WHEN TO CHANGE THE STRAINER BASKET (S).
10. THIS NOTE APPLIES TO SYSTEMS WITH THE FUEL GAS STRAINER LOCATED INSIDE OR OUTSIDE OF THE MODULE.

    THE FOLLOWING GENERAL GUIDELINES SHOULD BE USED FOR PIPING DESIGN:
    -LOCATE THE STRAINER IN A STRAIGHT, HORIZONTAL RUN OF PIPE. PROVIDE A MINIMUM OF 10 PIPE DIAMETERS UPSTREAM OF THE STRAINER INLET WITHOUT BENDS OR REDUCERS.
    -AVOID ARRANGEMENTS WHICH PRODUCE A NOZZLE EFFECT AT THE INLET OF THE STRAINER.
    -IF THE STRAINIER IS LOCATED WITH-IN THE MODULE CONSIDER FG1 TO BE THE STRAINER INLET FOR UPSTREAM PIPING DESIGN CONDITIONS.
    -ALLOW 10 INCHES [254mm] OF HEADROOM ABOVE DUPLEX STRAINER FOR BASKET REMOVAL.
11. PRESSURE DIFFERENTIAL INDICATOR IS CONNECTED BETWEEN GAS SUPPLY PIPING AND GAS MANIFOLD LOW POINT DRAINS WHILE TEMPORARY CONICAL STRAINER IS IN USE (REFER TO MLI A179).
12. LOW POINT DRAIN THREADED BALL VALVE CONNECTION.
13. SEE MLI 0302 FOR PURCHASER'S CONNECTION AND INSTALLATION DETAILS OF METERING TUBE.
14. FLUID VELOCITY SHALL BE LIMITED TO 200 FEET/SEC (61M/SEC) IN INTERCONNECT PIPING.
15. NATURAL GAS LHV 1017.25 BTU/SCF 20917 BTU/LB.
16. GAS TEMPERATURES
    MAX: 80° F (26.67° C)
    MIN: 66°F (18.89° C)

    MAXIMUM SUPPLY PRESSURE EXCURSIONS ARE LIMITED TO EITHER 1% PER SECOND RAMP OR 5% INSTANTANEOUS STEP, THE 1% PER SECOND RAMP IS APPLICABLE OVER THE RANGE OF MINIMUM PRESSURE REQUIREMENT TO MAXIMUM OPERATING PRESSURE. THE 5% STEP IS APPLICABLE OVER THE RANGE OF MINIMUM PRESSURE REQUIREMENT TO 95% OF MAXIMUM OPERATING PRESSURE AND WITH MAXIMUM OF 5% STEP CHANGE IN 5 SECONDS

    THE MAXIMUM RATE OF GAS TEMPERATURE CHANGE IS 2°F [17°C]/SEC.
17. PROVIDE CLASS-VI SHUT OFF.
18. PROVIDE 500 PSIG [3447.38 kPa] OVER-PRESSURE PROTECTION UPSTREAM OF METER TUBE.
19. GAS FUEL MUST MEET GE141040.
20. POTENTIAL SOURCE OF NATURAL GAS AT TEMPERATURE SHOWN IN NOTE16 OR PURGE AIR AT 710°F [377°C] MAX.
21. GAS FUEL MODULE VENT FANS WILL BE SHIPPED WITH MLI 0991.
22. SYSTEM PARAMETERS AND SPECIFICATIONS ARE BASED ON GE DRAWING 123E2488 (PROVIDED BY CUSTOMER). INCLUDING REQUIREMENTS FOR DUAL FUEL SYSTEMS PER CUSTOMER SCOPE OF WORK.

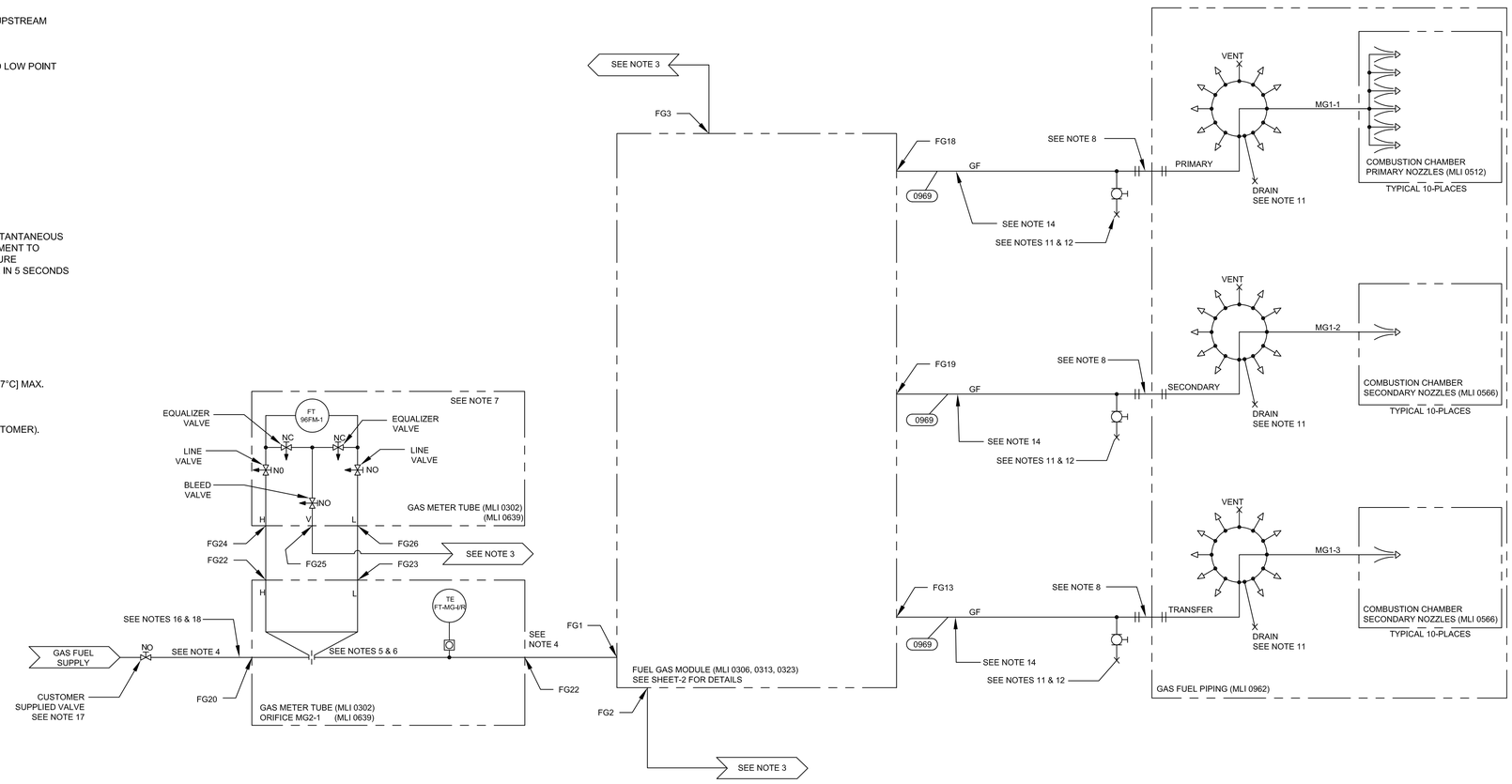

N° DE DOCUMENTO	DESCRIPCIÓN		REV.	FECHA
AGM-02-0204-PLA-M-0073	MECHANICAL OUTLINE-GTG	(MLI 0306)		
AGM-02-0204-PLA-P-0054	FUEL PURGE P&ID	(MLI 0477)		
AGM-02-0204-PLA-P-0050	TRIP OIL P&ID	(MLI 0418)		
AGM-02-0204-PLA-I-0046	DEVICE SUMMARY	(MLI 0414)		
AGM-02-0204-PLA-M-0013	DUAL FUEL NOZZLE ASSEMBLY-SECONDARY	(MLI 0566)		
AGM-02-0204-PLA-M-0009	DUAL FUEL NOZZLE ASSEMBLY-PRIMARY	(MLI 0512)		
AGM-02-0204-PLA-M-0003	OUTLINE-GT PACKAGE CONNECTION-PIPING	(MLI 0313)		

DOCUMENTOS DE REFERENCIA

REV.	FECHA	REVISIONES O MODIFICACIONES	DIBUJO	REVISO	APROBO
0	14/07/11	ISSUED FOR CONSTRUCTION; SEE NOTE 22	SAB	CB	TK

REF. FABRICANTE		
REF. FABRICANTE	FABRICANTE	O/C:

DERWICK ASSOCIATES CORP. | ProEnergy SERVICES | CORPOELEC CORPORACIÓN ELÉCTRICA NACIONAL | La Electricidad de Caracas | GERENCIA FUNCIONAL DE INGENIERÍA Y PROYECTOS | SENECA

AMPLIACIÓN DE LA CAPACIDAD DE GENERACIÓN Y TRANSPORTE DE ELECTRICIDAD EN LA ISLA DE MARGARITA

FUEL GAS P&ID
DUAL FUEL MOD. UNITS 298034 & 298035
(MLI 0422)

PLANO N°: | REV:
PROYECTO N°: 409-2956-1

CALCULO:	PROYECTO:	ESCALA: NONE	PLANO No: AGM-02-0204-PLA-P-0052
REVISADO: C. Brown	CALCULO:	FECHA: 14/07/11	
DIBUJO: S. Boerckel	REVISADO: J. Castillo	DISK. N°	
APROBADO: T. Koontz	DIBUJO:	ESC./PLOTEO:	REV. 0
ARCHIVO:	APROBADO: M. Monticelli	ARCHIVO:	PAGINA: 1 DE: 4

F_A1_11 – 841x594mm

N° PLANO: AGM-02-0204-PLA-P-0052 | 0

ALL DIMENSIONS IN BRACKETS [ ] ARE MILLIMETER; EXPRESSED DIMENSIONS ARE INCHES

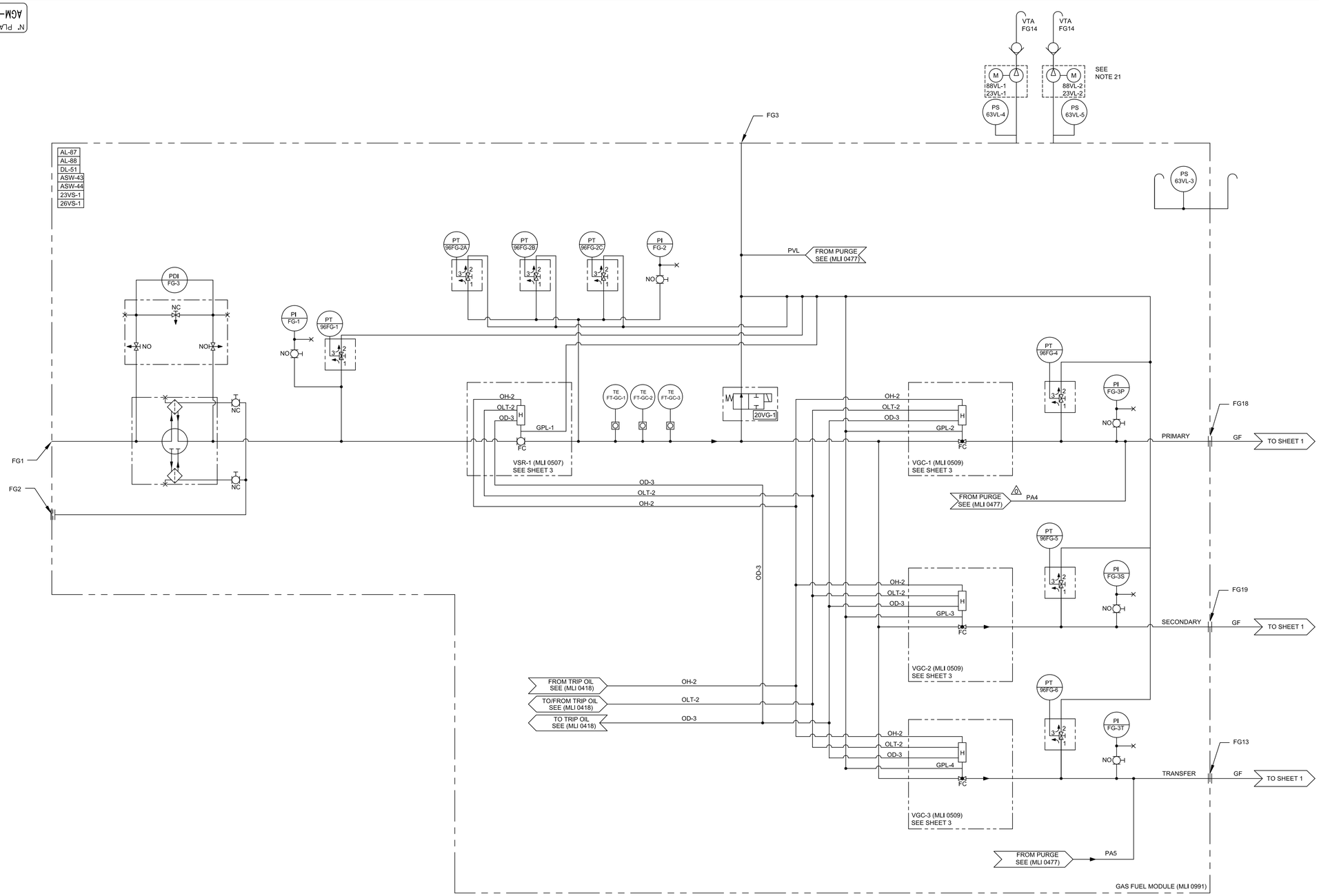

N° DE DOCUMENTO	DESCRIPCIÓN		REV.	FECHA
AGM-02-0204-PLA-M-0073	MECHANICAL OUTLINE-GTG	(MLI 0306)		
AGM-02-0204-PLA-P-0054	FUEL PURGE P&ID	(MLI 0477)		
AGM-02-0204-PLA-P-0050	TRIP OIL P&ID	(MLI 0418)		
AGM-02-0204-PLA-I-0046	DEVICE SUMMARY	(MLI 0414)		
AGM-02-0204-PLA-M-0013	DUAL FUEL NOZZLE ASSEMBLY-SECONDARY	(MLI 0566)		
AGM-02-0204-PLA-M-0009	DUAL FUEL NOZZLE ASSEMBLY-PRIMARY	(MLI 0512)		
AGM-02-0204-PLA-M-0003	OUTLINE-GT PACKAGE CONNECTION-PIPING	(MLI 0313)		

DOCUMENTOS DE REFERENCIA

REV.	FECHA	REVISIONES O MODIFICACIONES	DIBUJO	REVISO	APROBO
0	14/07/11	ISSUED FOR CONSTRUCTION; SEE NOTE 22 SHEET-1	SAB	CB	TK

REF. FABRICANTE		
REF. FABRICANTE	FABRICANTE	O/C:

DERWICK ASSOCIATES CORP. | ProEnergy SERVICES | CORPOELEC CORPORACIÓN ELÉCTRICA NACIONAL | La Electricidad de Caracas | GERENCIA FUNCIONAL DE INGENIERÍA Y PROYECTOS | SENECA

AMPLIACIÓN DE LA CAPACIDAD DE GENERACIÓN Y TRANSPORTE DE ELECTRICIDAD EN LA ISLA DE MARGARITA

FUEL GAS P&ID
DUAL FUEL MOD. UNITS 298034 & 298035
(MLI 0422)

PLANO N°:	REV:		
PROYECTO N°: 409-2956-1			
CALCULO:	PROYECTO:	ESCALA: NONE	PLANO No: AGM-02-0204-PLA-P-0052
REVISADO: C. Brown	CALCULO:	FECHA: 14/07/11	
DIBUJO: S. Boerckel	REVISADO: J. Castillo	DISK. N°	
APROBADO: T. Koontz	DIBUJO:	ESC./PLOTEO:	
ARCHIVO:	APROBADO: M. Monticelli	ARCHIVO:	PAGINA: 2 DE: 4 REV. 0

F_A1_11 – 841x594mm

LINEA DE CORTE DE ORIGINAL
LINEA DE CORTE DE COPIA

N° PLANO: AGM-02-0204-PLA-P-0052 | 0

I M P O R T A N T E

ESTE PLANO FUE ELABORADO EN AUTOCAD V.2008
CUALQUIER MODIFICACION REALIZADA EN CAMPO DEBERA SER NOTIFICADO A LA UNIDAD RESPONSABLE.
QUEDA PROHIBIDO CORREGIR ESTE PLANO SIN AUTORIZACION DE ESTA UNIDAD.

ALL DIMENSIONS IN BRACKETS [ ] ARE MILLIMETER; EXPRESSED DIMENSIONS ARE INCHES

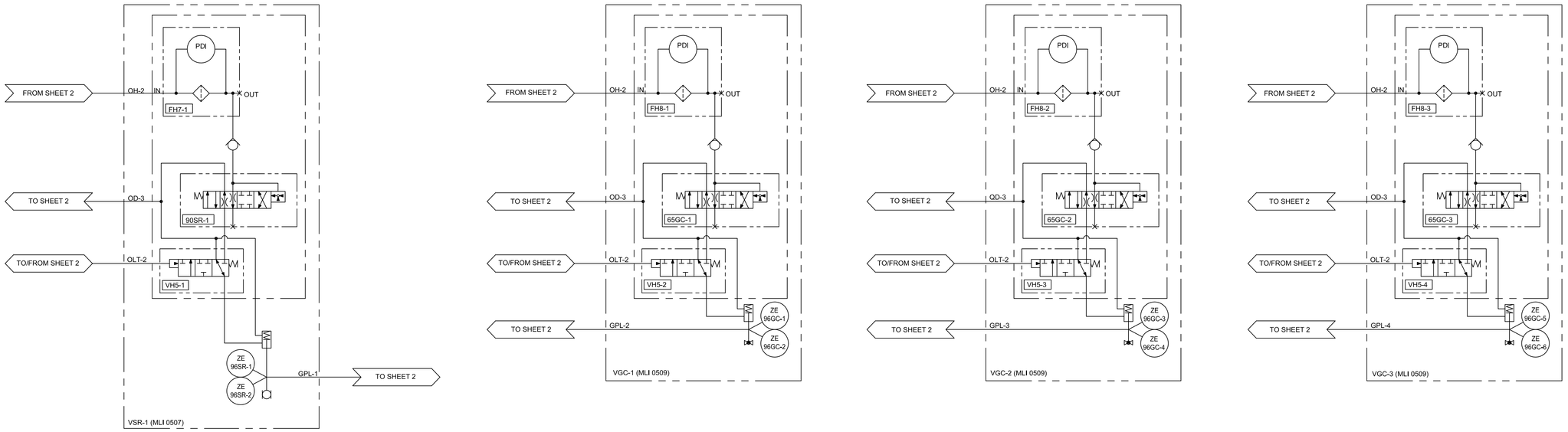

N° DE DOCUMENTO	DESCRIPCIÓN		REV.	FECHA
AGM-02-0204-PLA-M-0073	MECHANICAL OUTLINE-GTG	(MLI 0306)		
AGM-02-0204-PLA-P-0054	FUEL PURGE P&ID	(MLI 0477)		
AGM-02-0204-PLA-P-0050	TRIP OIL P&ID	(MLI 0418)		
AGM-02-0204-PLA-I-0046	DEVICE SUMMARY	(MLI 0414)		
AGM-02-0204-PLA-M-0013	DUAL FUEL NOZZLE ASSEMBLY-SECONDARY	(MLI 0566)		
AGM-02-0204-PLA-M-0009	DUAL FUEL NOZZLE ASSEMBLY-PRIMARY	(MLI 0512)		
AGM-02-0204-PLA-M-0003	OUTLINE-GT PACKAGE CONNECTION-PIPING	(MLI 0313)		

DOCUMENTOS DE REFERENCIA

REV.	FECHA	REVISIONES O MODIFICACIONES	DIBUJO	REVISO	APROBO
0	14/07/11	ISSUED FOR CONSTRUCTION; SEE NOTE 22 SHEET-1	SAB	CB	TK

REF. FABRICANTE		
REF. FABRICANTE	FABRICANTE	O/C:

DERWICK ASSOCIATES CORP. — ProEnergy SERVICES — CORPOELEC CORPORACIÓN ELÉCTRICA NACIONAL — La Electricidad de Caracas — GERENCIA FUNCIONAL DE INGENIERÍA Y PROYECTOS — SENECA

AMPLIACIÓN DE LA CAPACIDAD DE GENERACIÓN Y TRANSPORTE DE ELECTRICIDAD EN LA ISLA DE MARGARITA

FUEL GAS P&ID
DUAL FUEL MOD. UNITS 298034 & 298035
(MLI 0422)

PLANO N°: | REV:
PROYECTO N°: 409-2956-1

CALCULO:	PROYECTO:	ESCALA: NONE	PLANO No: AGM-02-0204-PLA-P-0052
REVISADO: C. Brown	CALCULO:	FECHA: 14/07/11	
DIBUJO: S. Boerckel	REVISADO: J. Castillo	DISK. N°	
APROBADO: T. Koontz	DIBUJO:	ESC./PLOTEO:	
ARCHIVO:	APROBADO: M. Monticelli	ARCHIVO:	PAGINA: 3 DE: 4 — REV. 0

F_A1_11 – 841x594mm

LINEA DE CORTE DE COPIA
LINEA DE CORTE DE ORIGINAL

LINEA DE CORTE DE ORIGINAL
LINEA DE CORTE DE COPIA

N° PLANO: AGM-02-0204-PLA-P-0052 0

IMPORTANTE

ESTE PLANO FUE ELABORADO EN AUTOCAD V.2008
CUALQUIER MODIFICACION REALIZADA EN CAMPO
DEBERA SER NOTIFICADO A LA UNIDAD
RESPONSABLE.
QUEDA PROHIBIDO CORREGIR ESTE PLANO SIN
AUTORIZACION DE ESTA UNIDAD.

ALL DIMENSIONS IN BRACKETS [ ] ARE MILLIMETER; EXPRESSED DIMENSIONS ARE INCHES

INTERFACE POINT NAME	SHEET No. DWG ZONE	FLUID TYPE	MIN PRESSURE PSIG [KG/CM²] (UNLESS OTHERWISE NOTED)	MIN TEMPERATURE °F [°C]	MIN FLOW #/SEC [KG/SEC]	MAXIMUM PRESSURE PSIG [KG/CM²] (UNLESS OTHERWISE NOTED)	MAXIMUM TEMPERATURE °F [°C]	MAXIMUM FLOW #/SEC [KG/SEC]	CONNECTION DESCRIPTION	INTERFACE TYPE
FG1	SH-1	GAS (SEE NOTE 15)	315 [22.15]	SEE NOTE 16	0.4 [0.18]	375 [26.36]	SEE NOTE 16	14.86 [6.74]	FUEL GAS INLET	GEPGE - OTHERS
FG2	SH-1	GAS	0	AMBIENT	0	375 [26.36]	SEE NOTE 16	1.0 [0.45]	FUEL GAS STRAINER BLOWDOWN	GEPGE - OTHERS
FG3	SH-1	GAS/AIR	0	AMBIENT	0	150 [10.55]	SEE NOTE 20	1.0 [0.45]	GAS COMPARTMENT VALVE VENT	GEPGE - OTHERS
FG13	SH-1	GAS	0	AMBIENT	-	350 [24.61]	120 [48]	8.12 [3.68]	FUEL GAS TRANSFER DISCHARGE	GEPGE - GEPGE
FG14	SH-2	GAS/AIR	0	AMBIENT	-	6in H2O	150 [65]	950 SCFM	GAS COMPARTMENT VENT DISCHARGE	GEPGE - OTHERS
FG18	SH-1	GAS	0	AMBIENT	-	350 [24.61]	120 [48]	12.63 [5.34]	FUEL GAS PRIMARY DISCHARGE	GEPGE - GEPGE
FG19	SH-1	GAS	0	AMBIENT	-	350 [24.61]	120 [48]	5.94 [2.69]	FUEL GAS SECONDARY DISCHARGE	GEPGE - GEPGE
FG20	SH-1	GAS	315 [22.15]	AMBIENT	-	375 [26.36]	120 [48]	14.86 [6.74]	FUEL GAS #1 METER TUBEINLET	GEPGE - OTHERS
FG21	SH-1	GAS	315 [22.15]	AMBIENT	-	375 [26.36]	120 [48]	14.86 [6.74]	FUEL GAS #1 METER TUBE OUTLET	GEPGE - OTHERS
FG22	SH-1	GAS	315 [22.15]	AMBIENT	-	375 [26.36]	120 [48]	0	FUEL GAS #1 METER TUBE SENSING LINE - UPSTREAM	GEPGE - OTHERS
FG23	SH-1	GAS	315 [22.15]	AMBIENT	-	375 [26.36]	120 [48]	0	FUEL GAS #1 METER TUBE SENSING LINE - DOWNSTREAM	GEPGE - OTHERS
FG24	SH-1	GAS	315 [22.15]	AMBIENT	-	375 [26.36]	120 [48]	0	FUEL GAS #1 5 VALVE MANIFOLD - HI PRESSURE INLET	GEPGE - OTHERS
FG25	SH-1	GAS	315 [22.15]	AMBIENT	-	375 [26.36]	120 [48]	0	FUEL GAS #1 5 VALVE MANIFOLD - EQUALIZER VENT	GEPGE - OTHERS
FG26	SH-1	GAS	315 [22.15]	AMBIENT	-	375 [26.36]	120 [48]	0	FUEL GAS #1 5 VALVE MANIFOLD - LO PRESSURE INLET	GEPGE - OTHERS

0	14/07/11	ISSUED FOR CONSTRUCTION; SEE NOTE 22 SHEET-1	SAB	CB	TK
REV.	FECHA	REVISIONES O MODIFICACIONES	DIBUJO	REVISO	APROBO

REF. FABRICANTE		
REF. FABRICANTE	FABRICANTE	O/C:

AGM-02-0204-PLA-M-0073	MECHANICAL OUTLINE-GTG	(MLI 0306)	
AGM-02-0204-PLA-P-0054	FUEL PURGE P&ID	(MLI 0477)	
AGM-02-0204-PLA-P-0050	TRIP OIL P&ID	(MLI 0418)	
AGM-02-0204-PLA-I-0046	DEVICE SUMMARY	(MLI 0414)	
AGM-02-0204-PLA-M-0013	DUAL FUEL NOZZLE ASSEMBLY-SECONDARY	(MLI 0566)	
AGM-02-0204-PLA-M-0009	DUAL FUEL NOZZLE ASSEMBLY-PRIMARY	(MLI 0512)	
AGM-02-0204-PLA-M-0003	OUTLINE-GT PACKAGE CONNECTION-PIPING	(MLI 0313)	
N° DE DOCUMENTO	DESCRIPCIÓN	REV.	FECHA

DOCUMENTOS DE REFERENCIA

DERWICK ASSOCIATES ESAN — ProEnergy SERVICES — CORPOELEC CORPORACIÓN ELÉCTRICA NACIONAL — La Electricidad de Caracas — GERENCIA FUNCIONAL DE INGENIERÍA Y PROYECTOS — SENECA

AMPLIACIÓN DE LA CAPACIDAD DE GENERACIÓN Y TRANSPORTE DE ELECTRICIDAD EN LA ISLA DE MARGARITA

FUEL GAS P&ID
DUAL FUEL MOD. UNITS 298034 & 298035
(MLI 0422)

PLANO N°:	REV:		
PROYECTO N°: 409-2956-1			
CALCULO:	PROYECTO:	ESCALA: NONE	PLANO No: AGM-02-0204-PLA-P-0052
REVISADO: C. Brown	CALCULO:	FECHA: 14/07/11	
DIBUJO: S. Boerckel	REVISADO: J. Castillo	DISK. N°	
APROBADO: T. Koontz	DIBUJO:	ESC./PLOTEO:	REV. 0
ARCHIVO:	APROBADO: M. Monticelli	ARCHIVO:	PAGINA: 4 DE: 4

F_A1_11 – 841x594mm

LINEA DE CORTE DE COPIA
LINEA DE CORTE DE ORIGINAL

N° PLANO: AGM-02-0204-PLA-P-0053 | 0

ALL DIMENSIONS IN BRACKETS [ ]
ARE MILLIMETER; EXPRESSED
DIMENSIONS ARE INCHES

1. SEE AGM-02-0204-PLA-I-0046 (DEVICE SUMMARY) MLI 0414 FOR CONTROL
2. ORIFICE USED TO ACHIEVE DESIRED 1.2 ATOMIZING AIR PRESSURE RATIO (AA MANIFOLD PRESSURE / Pcd) DURING GAS FUEL OPERATION.
3. SYSTEM PARAMETERS AND SPECIFICATIONS ARE BASED ON TYPICAL REQUIREMENTS FOR 7EA DLN 1.0 DUAL FUEL SYSTEMS AND CUSTOMER SCOPE OF WORK.

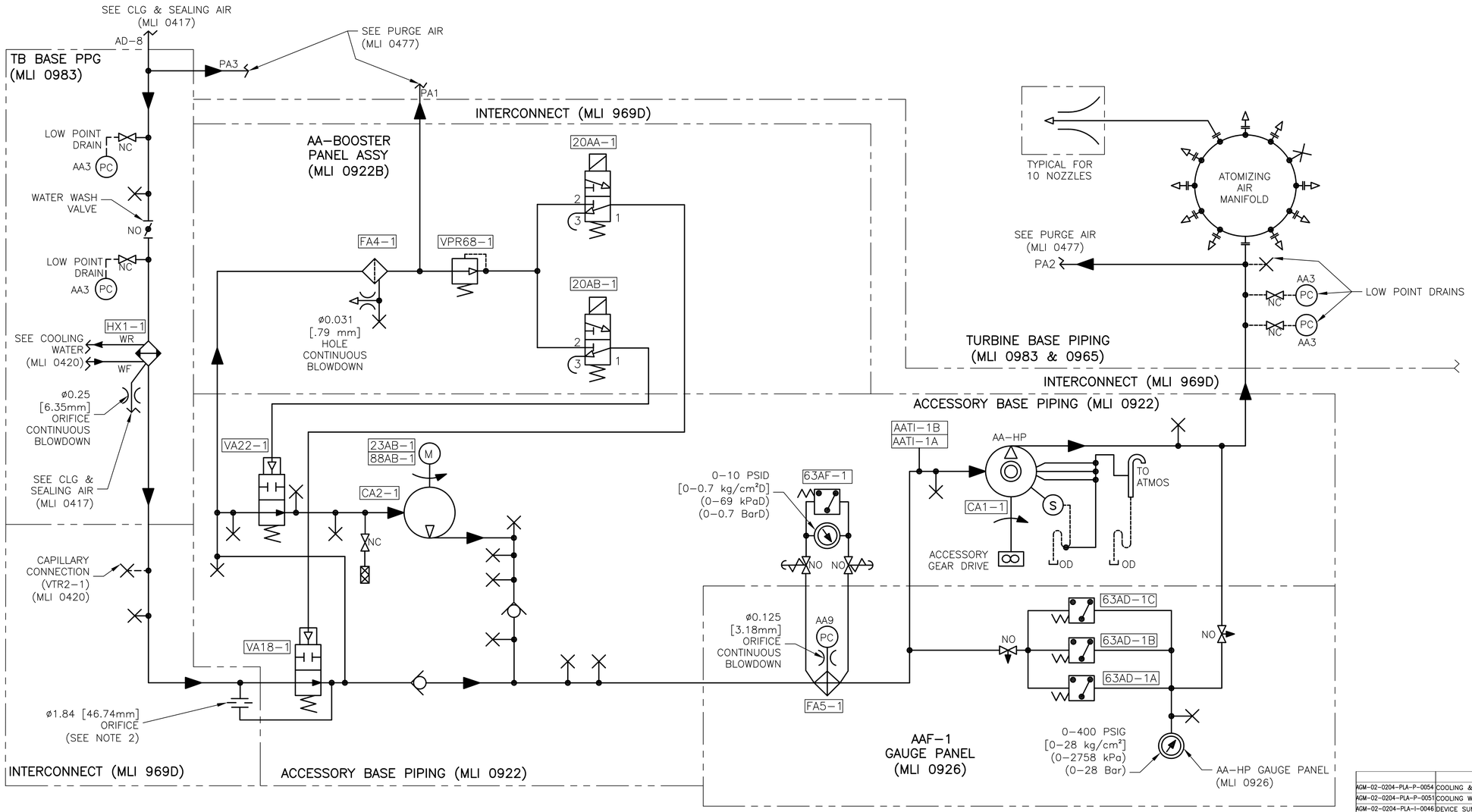

N° DE DOCUMENTO	DESCRIPCIÓN		REV.	FECHA
AGM-02-0204-PLA-P-0054	COOLING & SEALING AIR P & ID	(MLI 0417)		
AGM-02-0204-PLA-P-0051	COOLING WATER P & ID	(MLI 0420)		
AGM-02-0204-PLA-I-0046	DEVICE SUMMARY	(MLI 0414)		
AGM-02-0204-PLA-M-0031	ATOMIZING AIR LOWER PIPING ARRANGEMENT	(MLI 0983)		
AGM-02-0204-PLA-M-0029	ATOMIZING AIR INTERCONNECT	(MLI 0969D)		
AGM-02-0204-PLA-M-0026	ATOMIZING AIR – TURBINE COMPARTMENT	(MLI 0965)		
AGM-02-0204-PLA-M-0024	GAUGE CABINET ASSEMBLY – ACCESSORY	(MLI 0926)		
AGM-02-0204-PLA-I-0023	ATOMIZING AIR BOOSTER PANEL ASSEMBLY	(MLI 0922B)		
AGM-02-0204-PLA-M-0022	ATOMIZING AIR PIPING ARRANGEMENT – ACCESSORY	(MLI 0922A)		

DOCUMENTOS DE REFERENCIA

REV.	FECHA	REVISIONES O MODIFICACIONES	DIBUJO	REVISO	APROBO
0	07/07/11	ISSUED FOR CONSTRUCTION, SEE NOTE 3	SAB	CB	TK

REF. FABRICANTE		
REF. FABRICANTE	FABRICANTE	O/C:

DERWICK ASSOCIATES CORP. · ProEnergy SERVICES · CORPOELEC · La Electricidad de Caracas · SENECA

AMPLIACIÓN DE LA CAPACIDAD DE GENERACIÓN Y TRANSPORTE DE ELECTRICIDAD EN LA ISLA DE MARGARITA

ATOMIZING AIR P & ID
DUAL FUEL MOD. UNITS 298034 & 298035
(MLI 0425)

PLANO N°: | REV:
PROYECTO N°: 409-2956-1

CALCULO:	PROYECTO:	ESCALA: NONE	PLANO No: AGM-02-0204-PLA-P-0053
REVISADO: C. Brown	CALCULO:	FECHA: 05/03/11	
DIBUJO: S. Boerckel	REVISADO: J. Castillo	DISK. N°	
APROBADO: T. Koontz	DIBUJO:	ESC./PLOTEO:	
ARCHIVO:	APROBADO: M. Monticelli	ARCHIVO:	PAGINA: 1 DE: 1 — REV. 0

F_A1_11 – 841x594mm

ALL DIMENSIONS IN BRACKETS [ ] ARE MILLIMETER, EXPRESSED DIMENSIONS ARE INCHES

NOTES:

1. SEE DEVICE SUMMARY (MLI 0414) FOR CONTROL DEVICE SETTINGS.
2. SET NEEDLE VALVE TO FULL OPEN. NEEDLE VALVE PROVIDED TO CONTROL OPENING TIME OF VA19-1 AND VA19-2 IF REQUIRED LATER.
3. VARIABLE SUPPLY ORIFICE SET TO OPEN VA13-1 AND VA13-2 IN 35±5 SECONDS, VENT TO CLOSE IN 10 SECONDS MAXIMUM. VARIABLE VENT ORIFICES SET TO OPEN VA13-3 AND VA13-4 IN 35±5 SECONDS, SUPPLY TO CLOSE IN 10 SECONDS MAXIMUM.
4. WARNING: DO NOT BLOW DOWN Y-STRAINER DURING UNIT FIRED OPERATION. BLOW DOWN DURING START UP EXHAUST PURGE OR JUST AFTER FIRED SHUTDOWN COMMAND.
5. BLOW DOWN AS REQUIRED. REMOVE AND CLEAN SCREEN WHEN PRESSURE EXCEEDS 3 PSID (0.21 KG/CM²).
6. INSTRUMENT AIR MAY BE REQUIRED AT START UP AND SHUTDOWN BASED ON CONTROL SEQUENCING.
7. TYPICAL 10 PLACES.
8. THREE-WAY VALVES TO BE MOUNTED WITH THE ACTUATOR PINS AND DRAIN CONNECTIONS (Pv) POINTED DOWN. DRAIN TUBING IS TO SLOPE AWAY FROM THE 3-WAY VALVES.
9. NORMALLY CLOSED VALVE, OPEN DURING OFFLINE COMPRESSOR WATER WASH (LOCATED ON FUEL GAS INTERCONNECT PIPING).
10. THE PURGE Y-STRAINER SHALL HAVE A 100 MESH BASKET (140 MICRON, 5.5 MIL) THIS LEVEL OF SCREENING IS REQUIRED TO PROTECT THE CHECK VALVES (WATER) AND THE NOZZLES.
11. ADJUST VA33-1 VENT NEEDLE VALVE SO THAT WATER PURGE VALVE OPENS IN 10 SECONDS IN ORDER TO MINIMIZE THE POTENTIAL FOR SECONDARY FLAMEOUT.
12. DO NOT COMBINE TELLTALE DRAIN LINES TOGETHER. OUTLET OF DRAIN MUST BE VISIBLE.
13. VALVES VA19-1, VA19-2, AND VA33-1 ARE NORMALLY OPEN TO PURGE. VA19-3 AND VA19-4 ARE NORMALLY OPEN TO PURGE.
14. PURGE SYSTEM MUST BE WATER FLUSHED PRIOR TO OPERATION.
15. VA23-2 TO BE LOCKED AFTER FIELD ADJUSTMENT.
16. VALVE STEM PACKING LEAKOFF (PVL) CONTINUED ON ML ITEM 0422.
17. PG1 AND PG13 (MLI 0991) ARE POTENTIAL CLASS-1, DIV-1, SOURCES OF NATURAL GAS. INSTALLER SHALL ROUTE THESE LINES SEPARATE FROM EACH OTHER AND ALL OTHER VENTS TO A NATURALLY AND IN AN AREA FREE FROM VENTILATED AREA OUTSIDE OF ANY BUILDINGS OR ENCLOSURES, SOURCES OF IGNITION. THE EXTENT OF THE HAZARDOUS AREA CREATED BY PG1 AND PG13 IS A 5 FT [1524] CLASS-1, DIV-1, GROUP-D SPHERICAL RADIUS AND AREA BETWEEN 5 FT [1524] AND 10 FT [3048] IS CONSIDERED TO BE A CLASS-1, DIV-2, GROUP-D SPHERICAL RADIUS.
18. SYSTEM PARAMETERS AND SPECIFICATIONS ARE BASED ON GE DRAWING 353B3407 (PROVIDED BY CUSTOMER). INCLUDING REQUIRMENTS FOR DUAL FUEL SYSTEMS PER CUSTOMER SCOPE OF WORK.

PARAMETERS AT PC CONNECTIONS

PC	TEMP	PRESSURE	FLOW (TYP)	FLOW (MAX)
PG35	150 °F (65.6 °C)	90 PSIG (NOM) (6.33 KG/CM²)	14 SCFM [24M³/HR] TRANSIENT	14 SCFM [24 M³/HR] TRANSIENT
AA2A & AA2B	225 °F (107.2°C)	235 PSIG (NOM) (16.52 KG/CM²)	0 GPM [0 M³/HR	20 GPM [4.54 M³/HR] @ FAULT CONDITION
AA15	225°F (107.2°C)	270 PSIG (NOM) (18.98 KG/CM2)	89 SCFM [151 M³/HR]	89 SCFM [151 M³/HR]
PG46	300 °F (149 °C)	270 PSIG (NOM) (18.98 KG/CM²)	0 GPM [0 M³/HR	121SCFM [206 M³/HR] TRANSIENT @ BLOWDOWN
PG33	225°F (107.2°C)	235 PSIG (NOM) (16.52 KG/CM²)	0 GPM [0 M³/HR	20 GPM [4.54 M³/HR] @ FAULT CONDITION
PG13	250°F (121.1°C)	90 PSIG (NOM) (6.33 KG/CM²)	23.8 SCFM [40.4 M³/HR] TRANSIENT	23.8 SCFM [40.4 M³/HR] TRANSIENT
PG1	250°F (12V.1°C)	90 PSIG (NOM) (6.33 KG/CM²)	23.8 SCFM [40.4 M³/HR] TRANSIENT	23.8 SCFM [40.4 M³/HR] TRANSIENT

REV.	FECHA	REVISIONES O MODIFICACIONES	DIBUJO	REVISO	APROBO
0.	02/08/11	ISSUED FOR CONSTRUCTION; SEE NOTE 18	SAB	CB	TK

REF. FABRICANTE		
REF. FABRICANTE	FABRICANTE	O/C:

N° DE DOCUMENTO	DESCRIPCIÓN	REV.	FECHA
AGM-02-0204-PLA-P-0053	ATOMIZING AIR P&ID (MLI-0425)		
AGM-02-0204-PLA-P-0052	FUEL GAS P&ID (MLI-0422)		
AGM-02-0204-PLA-P-0051	COOLING WATER P&ID (MLI-0420)		
AGM-02-0204-PLA-P-0049	COOLING & SEALING AIR P&ID (MLI-0414)		
AGM-02-0204-PLA-P-0048	LIQUID FUEL SYSTEM P&ID (MLI-0424)		
AGM-02-0204-PLA-I-0046	DEVICE SUMMARY (MLI-0414)		
AGM-02-0204-PLA-I-0011	PRESS. TRANSDUCER PANEL-ASSY PURGE PROTECTION (MLI-0557T)		

DOCUMENTOS DE REFERENCIA

DERWICK · ProEnergy SERVICES · CORPOELEC · La Electricidad de Caracas · SENECA

AMPLIACIÓN DE LA CAPACIDAD DE GENERACIÓN Y TRANSPORTE DE ELECTRICIDAD EN LA ISLA DE MARGARITA

FUEL NOZZLE PURGE P&ID
DUAL FUEL MOD. UNITS 298034 & 298035
(MLI 0477)

PLANO N°:	REV:		
PROYECTO N°: 409-2956-1			
CALCULO:	PROYECTO:	ESCALA: NONE	PLANO No: AGM-02-0204-PLA-P-0054
REVISADO: C. Brown	CALCULO:	FECHA: 02/08/11	
DIBUJO: S. Boerckel	REVISADO: J. Castillo	DISK. N°	
APROBADO: T.Koontz	DIBUJO:	ESC./PLOTEO:	
ARCHIVO:	APROBADO: M. Monticelli	ARCHIVO:	PAGINA: 1 DE: 5 — REV. 0

F_A1_11 – 841x594mm

N° PLANO: AGM-02-0204-PLA-P-0054 | 0

IMPORTANTE

ESTE PLANO FUE ELABORADO EN AUTOCAD V.2008
CUALQUIER MODIFICACION REALIZADA EN CAMPO DEBERA SER NOTIFICADO A LA UNIDAD RESPONSABLE.
QUEDA PROHIBIDO CORREGIR ESTE PLANO SIN AUTORIZACION DE ESTA UNIDAD.

ALL DIMENSIONS IN BRACKETS [ ] ARE MILLIMETER; EXPRESSED DIMENSIONS ARE INCHES

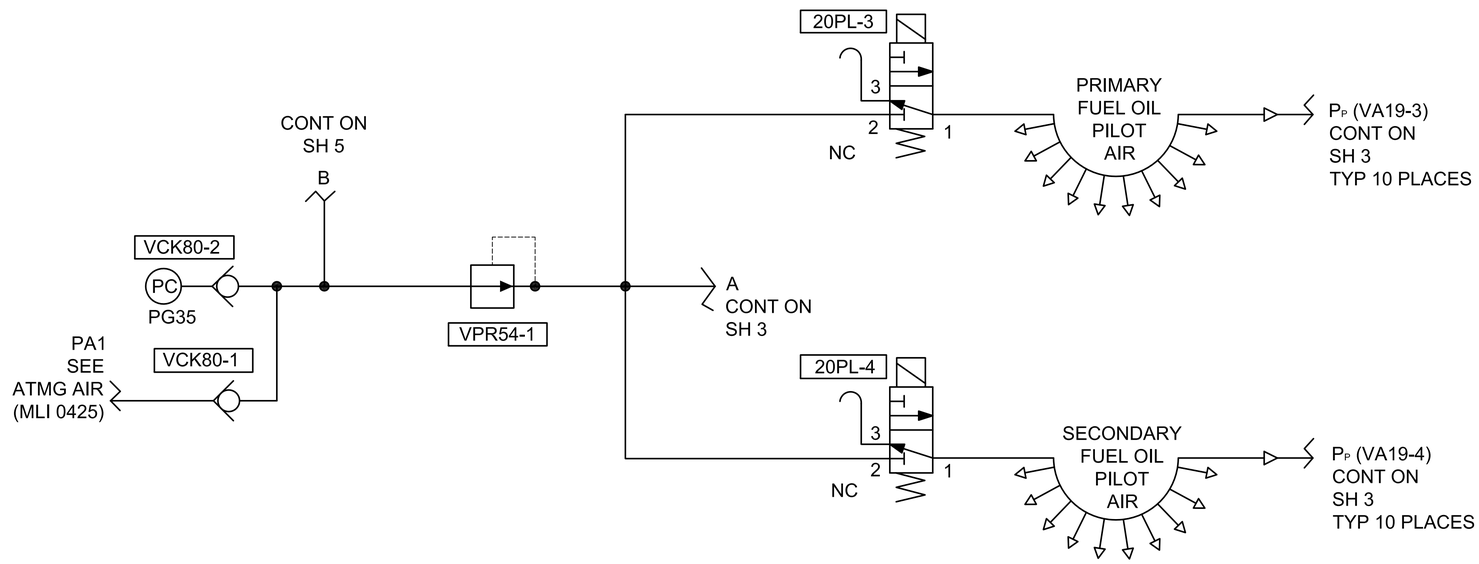

N° DE DOCUMENTO	DESCRIPCIÓN	REV.	FECHA
AGM-02-0204-PLA-P-0053	ATOMIZING AIR P&ID (MLI-0425)		
AGM-02-0204-PLA-P-0052	FUEL GAS P&ID (MLI-0422)		
AGM-02-0204-PLA-P-0051	COOLING WATER P&ID (MLI-0420)		
AGM-02-0204-PLA-P-0049	COOLING & SEALING AIR P&ID (MLI-0414)		
AGM-02-0204-PLA-P-0048	LIQUID FUEL SYSTEM P&ID (MLI-0424)		
AGM-02-0204-PLA-I-0046	DEVICE SUMMARY (MLI-0414)		
AGM-02-0204-PLA-I-0011	PRESS. TRANSDUCER PANEL-ASSY PURGE PROTECTION (MLI-0557T)		

DOCUMENTOS DE REFERENCIA

REV.	FECHA	REVISIONES O MODIFICACIONES	DIBUJO	REVISO	APROBO
0	02/08/11	ISSUED FOR CONSTRUCTION; SEE NOTE 18 SHEET-1	SAB	CB	TK

REF. FABRICANTE		
REF. FABRICANTE	FABRICANTE	O/C:

DERWICK — ProEnergy SERVICES — CORPOELEC — La Electricidad de Caracas — SENECA

AMPLIACIÓN DE LA CAPACIDAD DE GENERACIÓN Y TRANSPORTE DE ELECTRICIDAD EN LA ISLA DE MARGARITA

FUEL NOZZLE PURGE P&ID
DUAL FUEL MOD. UNITS 298034 & 298035
(MLI 0477)

PLANO N°:	REV:		
PROYECTO N°: 409-2956-1			
CALCULO:	PROYECTO:	ESCALA: NONE	PLANO No: AGM-02-0204-PLA-P-0054
REVISADO: C. Brown	CALCULO:	FECHA: 02/08/11	
DIBUJO: S. Boerckel	REVISADO: J. Castillo	DISK. N°	
APROBADO: T.Koontz	DIBUJO:	ESC./PLOTEO:	
ARCHIVO:	APROBADO: M. Monticelli	ARCHIVO:	PAGINA: 2 DE: 5 — REV. 0

F_A1_11 – 841x594mm

N° PLANO: AGM-02-0204-PLA-P-0054 | 0

I M P O R T A N T E

ESTE PLANO FUE ELABORADO EN AUTOCAD V.2008
CUALQUIER MODIFICACION REALIZADA EN CAMPO
DEBERA SER NOTIFICADO A LA UNIDAD
RESPONSABLE.
QUEDA PROHIBIDO CORREGIR ESTE PLANO SIN
AUTORIZACION DE ESTA UNIDAD.

ALL DIMENSIONS IN BRACKETS [ ] ARE MILLIMETER; EXPRESSED DIMENSIONS ARE INCHES

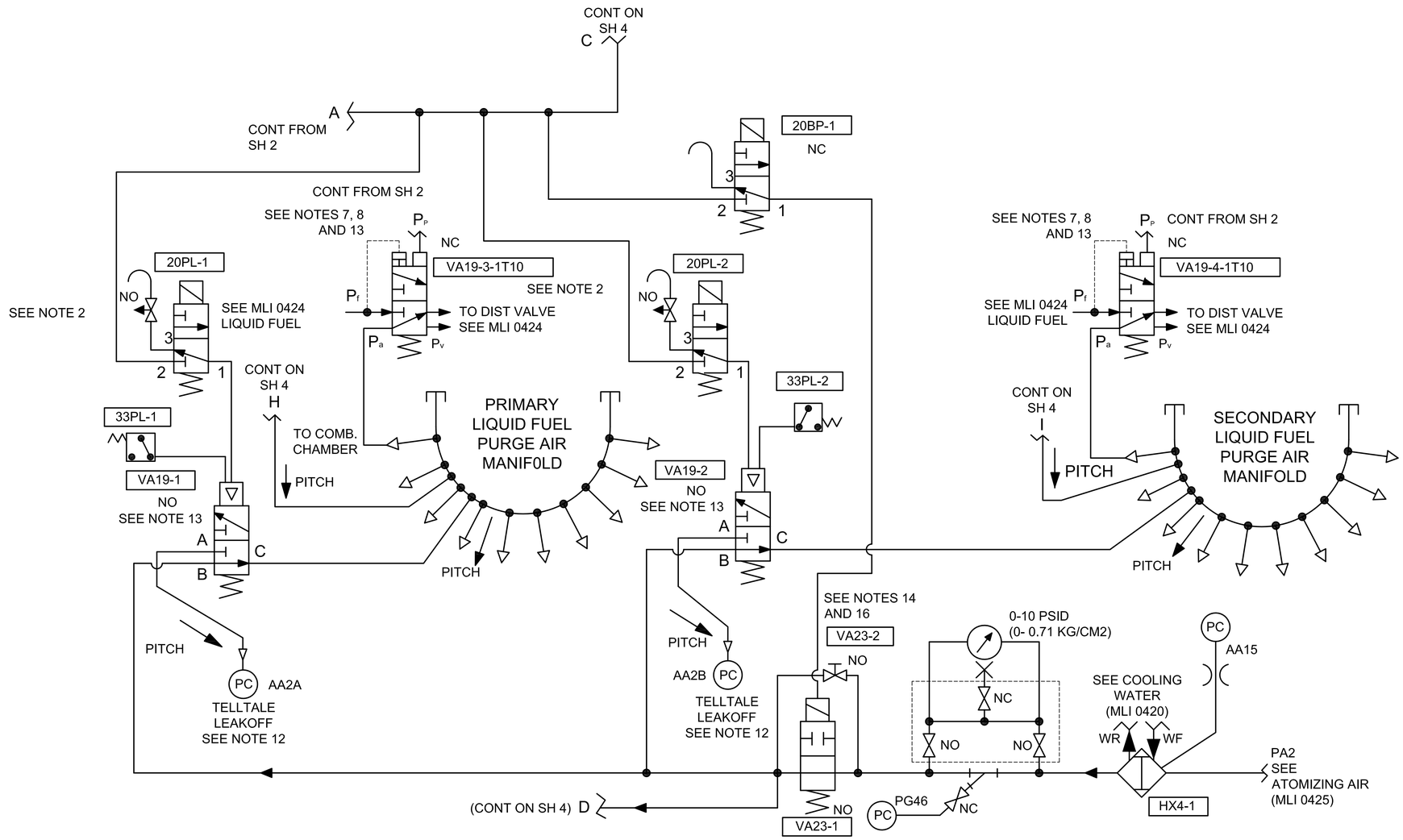

N° DE DOCUMENTO	DESCRIPCIÓN	REV.	FECHA
AGM-02-0204-PLA-P-0053	ATOMIZING AIR P&ID (MLI-0425)		
AGM-02-0204-PLA-P-0052	FUEL GAS P&ID (MLI-0422)		
AGM-02-0204-PLA-P-0051	COOLING WATER P&ID (MLI-0420)		
AGM-02-0204-PLA-P-0049	COOLING & SEALING AIR P&ID (MLI-0414)		
AGM-02-0204-PLA-P-0048	LIQUID FUEL SYSTEM P&ID (MLI-0424)		
AGM-02-0204-PLA-I-0046	DEVICE SUMMARY (MLI-0414)		
AGM-02-0204-PLA-I-0011	PRESS. TRANSDUCER PANEL-ASSY PURGE PROTECTION (MLI-0557T)		

DOCUMENTOS DE REFERENCIA

REV.	FECHA	REVISIONES O MODIFICACIONES	DIBUJO	REVISO	APROBO
0	02/08/11	ISSUED FOR CONSTRUCTION; SEE NOTE 18 SHEET-1	SAB	CB	TK

REF. FABRICANTE		
REF. FABRICANTE	FABRICANTE	O/C:

DERWICK ASSOCIATES CORP. | ProEnergy SERVICES | CORPOELEC | La Electricidad de Caracas | GERENCIA FUNCIONAL DE INGENIERIA Y PROYECTOS | SENECA

AMPLIACIÓN DE LA CAPACIDAD DE GENERACIÓN Y TRANSPORTE DE ELECTRICIDAD EN LA ISLA DE MARGARITA

FUEL NOZZLE PURGE P&ID
DUAL FUEL MOD. UNITS 298034 & 298035
(MLI 0477)

PLANO N°:	REV:		
PROYECTO N°: 409-2956-1			
CALCULO:	PROYECTO:	ESCALA: NONE	PLANO No: AGM-02-0204-PLA-P-0054
REVISADO: C. Brown	CALCULO:	FECHA: 02/08/11	
DIBUJO: S. Boerckel	REVISADO: J. Castillo	DISK. N°	
APROBADO: T.Koontz	DIBUJO:	ESC./PLOTEO:	
ARCHIVO:	APROBADO: M. Monticelli	ARCHIVO:	PAGINA: 3 DE: 5 — REV. 0

F_A1_11 – 841x594mm

N° PLANO: AGM-02-0204-PLA-P-0054 | 0

IMPORTANTE

ESTE PLANO FUE ELABORADO EN AUTOCAD V.2008 CUALQUIER MODIFICACION REALIZADA EN CAMPO DEBERA SER NOTIFICADO A LA UNIDAD RESPONSABLE.
QUEDA PROHIBIDO CORREGIR ESTE PLANO SIN AUTORIZACION DE ESTA UNIDAD.

ALL DIMENSIONS IN BRACKETS [ ] ARE MILLIMETER; EXPRESSED DIMENSIONS ARE INCHES

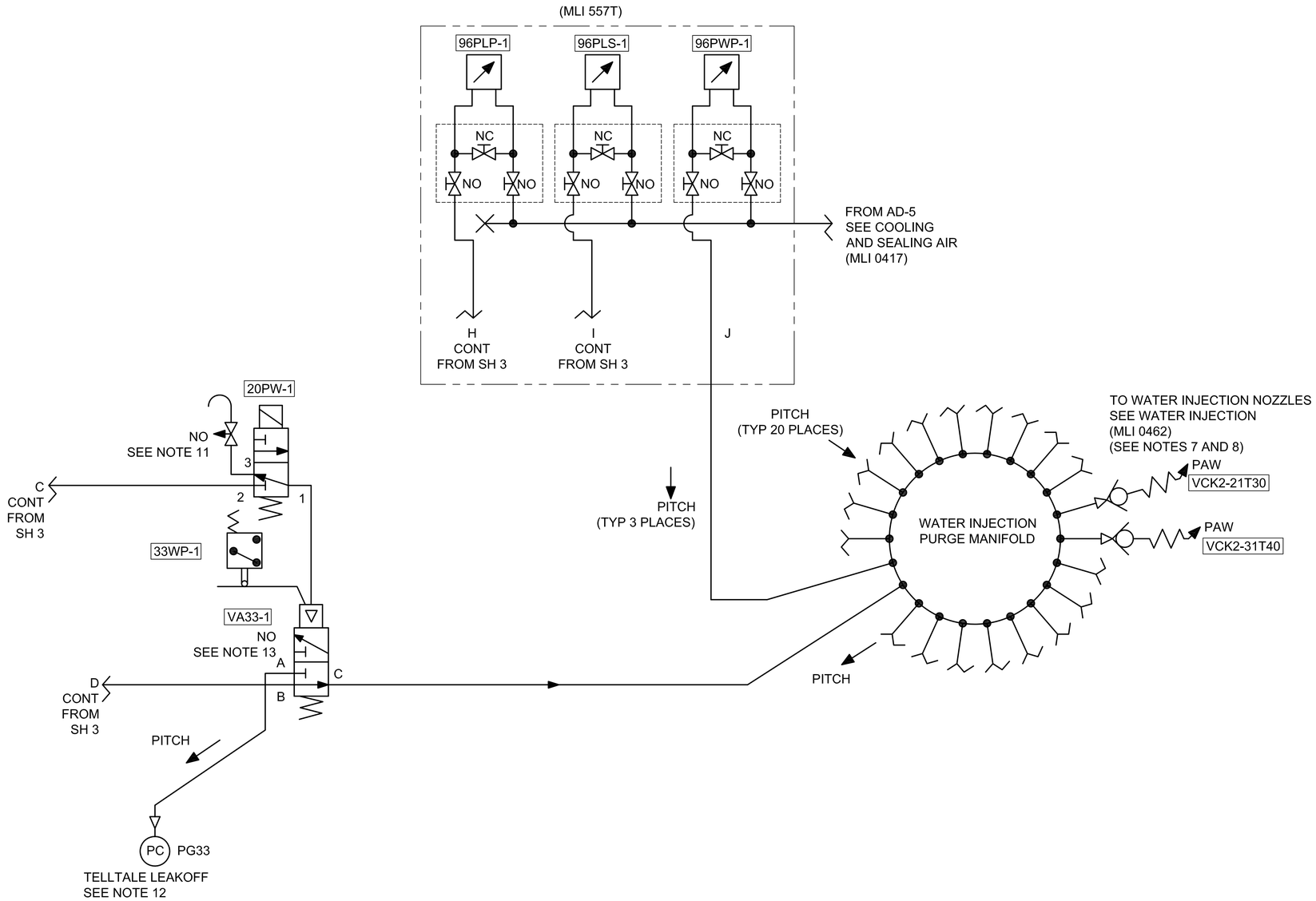

N° DE DOCUMENTO	DESCRIPCIÓN		REV.	FECHA
AGM-02-0204-PLA-P-0053	ATOMIZING AIR P&ID	(MLI-0425)		
AGM-02-0204-PLA-P-0052	FUEL GAS P&ID	(MLI-0422)		
AGM-02-0204-PLA-P-0051	COOLING WATER P&ID	(MLI-0420)		
AGM-02-0204-PLA-P-0049	COOLING & SEALING AIR P&ID	(MLI-0414)		
AGM-02-0204-PLA-P-0048	LIQUID FUEL SYSTEM P&ID	(MLI-0424)		
AGM-02-0204-PLA-I-0046	DEVICE SUMMARY	(MLI-0414)		
AGM-02-0204-PLA-I-0011	PRESS. TRANSDUCER PANEL-ASSY PURGE PROTECTION	(MLI-0557T)		

DOCUMENTOS DE REFERENCIA

REV.	FECHA	REVISIONES O MODIFICACIONES	DIBUJO	REVISO	APROBO
0	09/08/11	ISSUED FOR CONSTRUCTION; SEE NOTE 18 SHEET-1	SAB	CB	TK

REF. FABRICANTE		
REF. FABRICANTE	FABRICANTE	O/C:

DERWICK | ProEnergy SERVICES | CORPOELEC | La Electricidad de Caracas | SENECA

AMPLIACIÓN DE LA CAPACIDAD DE GENERACIÓN Y TRANSPORTE DE ELECTRICIDAD EN LA ISLA DE MARGARITA

FUEL NOZZLE PURGE P&ID
DUAL FUEL MOD. UNITS 298034 & 298035
(MLI 0477)

PLANO N°:	REV:		
PROYECTO N°: 409-2956-1			
CALCULO:	PROYECTO:	ESCALA: NONE	PLANO No:
REVISADO: C. Brown	CALCULO:	FECHA: 02/08/11	AGM-02-0204-PLA-P-0054
DIBUJO: S. Boerckel	REVISADO: J. Castillo	DISK. N°	
APROBADO: T.Koontz	DIBUJO:	ESC./PLOTEO:	
ARCHIVO:	APROBADO: M. Monticelli	ARCHIVO:	PAGINA: 4 DE: 5 — REV. 0

F_A1_11 - 841x594mm

N° PLANO: AGM-02-0204-PLA-P-0054 | 0

ALL DIMENSIONS IN BRACKETS [ ] ARE MILLIMETER; EXPRESSED DIMENSIONS ARE INCHES

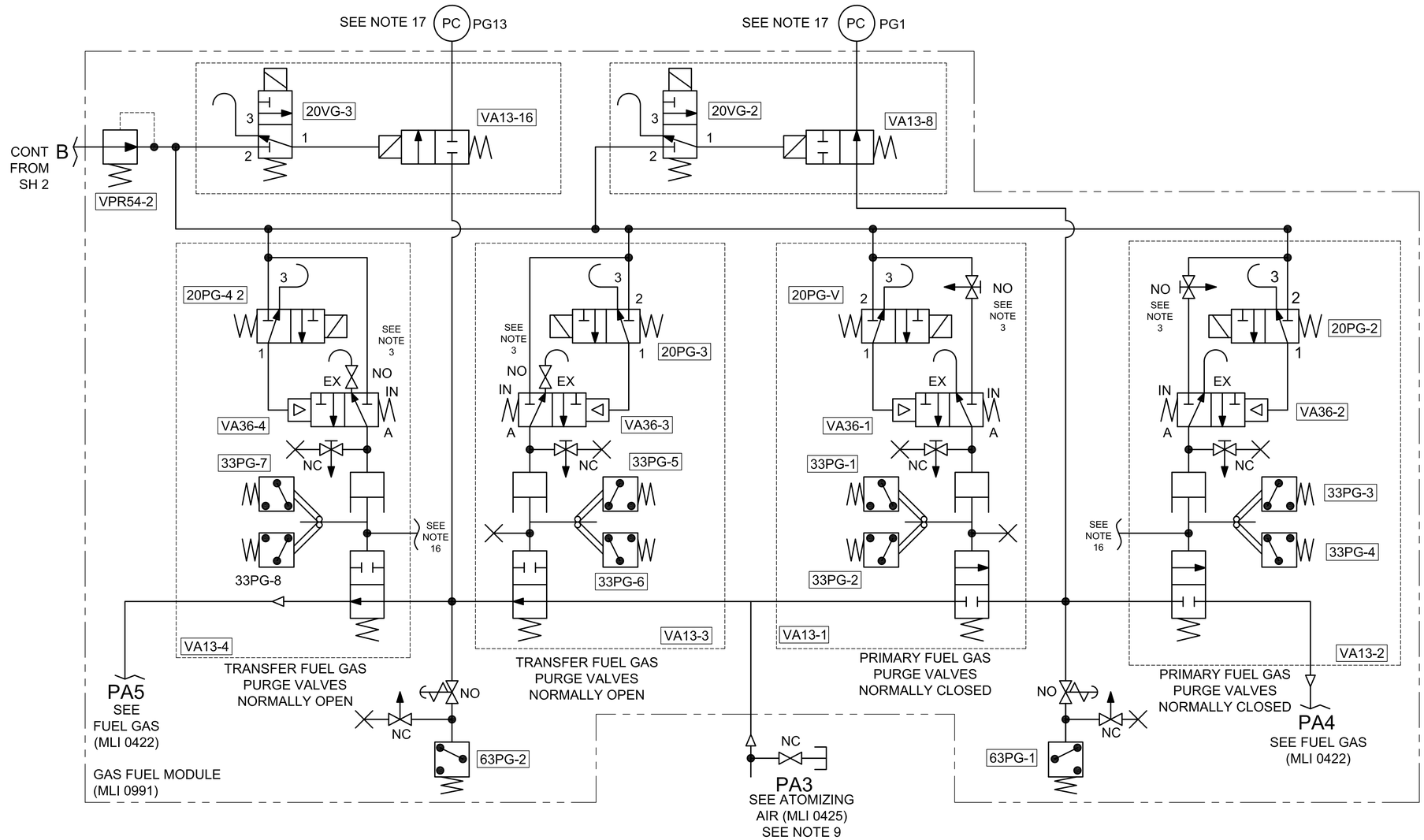

N° DE DOCUMENTO	DESCRIPCIÓN		REV.	FECHA
AGM-02-0204-PLA-P-0053	ATOMIZING AIR P&ID	(MLI-0425)		
AGM-02-0204-PLA-P-0052	FUEL GAS P&ID	(MLI-0422)		
AGM-02-0204-PLA-P-0051	COOLING WATER P&ID	(MLI-0420)		
AGM-02-0204-PLA-P-0049	COOLING & SEALING AIR P&ID	(MLI-0414)		
AGM-02-0204-PLA-P-0048	LIQUID FUEL SYSTEM P&ID	(MLI-0424)		
AGM-02-0204-PLA-I-0046	DEVICE SUMMARY	(MLI-0414)		
AGM-02-0204-PLA-I-0011	PRESS. TRANSDUCER PANEL-ASSY PURGE PROTECTION	(MLI-0557T)		

DOCUMENTOS DE REFERENCIA

REV.	FECHA	REVISIONES O MODIFICACIONES	DIBUJO	REVISO	APROBO
0	02/08/11	ISSUED FOR CONSTRUCTION; SEE NOTE 18 SHEET-1	SAB	CB	TK

REF. FABRICANTE		
REF. FABRICANTE	FABRICANTE	O/C:

DERWICK ASSOCIATES CORP. | ProEnergy SERVICES | CORPOELEC | La Electricidad de Caracas | SENECA

AMPLIACIÓN DE LA CAPACIDAD DE GENERACIÓN Y TRANSPORTE DE ELECTRICIDAD EN LA ISLA DE MARGARITA

FUEL NOZZLE PURGE P&ID
DUAL FUEL MOD. UNITS 298034 & 298035
(MLI 0477)

PLANO N°:	REV:		
PROYECTO N°: 409-2956-1			
CALCULO:	PROYECTO:	ESCALA: NONE	PLANO No:
REVISADO: C. Brown	CALCULO:	FECHA: 02/08/11	AGM-02-0204-PLA-P-0054
DIBUJO: S. Boerckel	REVISADO: J. Castillo	DISK. N°	
APROBADO: T.Koontz	DIBUJO:	ESC./PLOTEO:	REV. 0
ARCHIVO:	APROBADO: M. Monticelli	ARCHIVO:	PAGINA: 5 DE: 5

F_A1_11 – 841x594mm

N° PLANO: AGM-02-0204-PLA-P-0061 (0)

ALL DIMENSIONS IN BRACKETS [ ] ARE MILLIMETER; EXPRESSED DIMENSIONS ARE INCHES

NOTES.

1. SEE DEVICE SUMMARY (MLI 0414) FOR CONTROL DEVICE SETTINGS.
2. AT STARTUP SET MIST ELIMINATOR VENT VALVE AT 1/2 OPEN. WITH UNIT AT BASE LOAD PRESSURE IN MAIN LO TANK SHOULD BE −1 TO −2 INCHES [−25 TO −51 MM] OF WATER. ADJUST MIST ELIMINATOR VALVE TO OBTAIN THIS PRESSURE.
3. (0) SYSTEM PARAMETERS AND SPECIFICATIONS ARE BASED ON GE DRAWING 357B1802 (PROVIDED BY CUSTOMER). INCLUDING REQUIREMENTS FOR DUAL FUEL SYSTEM PER CUSTOMER SCOPE OF WORK.

LUBE OIL VENT SYSTEM OPERATING PRESSURES, TEMPERATURES AND FLOWS

SCHEMATIC/CONNECTION IDENTIFICATION	TEMPERATURE		PRESSURE		FLOW	
	NOMINAL	MAXIMUM	MINIMUM	MAXIMUM	MINIMUM	MAXIMUM
L09	130°F [54°C]	200°F [93°C]	−2 IN. H^2O [−51 MM H^2O]	0 IN. H^2O [0 MM H^2O]	1 GPM [0.23 M^3/HR]	5 GPM [1.14 M^3/HR]
L010	130°F [54°C]	200°F [93°C]	−2 IN. H^2O [−51 MM H^2O]	0 IN. H^2O [0 MM H^2O]	-----	1000 CFM [28.3 M^3/M]
L017	130°F [54°C]	200°F [93°C]	-----	ATM	0 GPM [0 M^3/HR]	0.01 GPM [0.002 M^3/HR]
L051	130°F [54°C]	200°F [93°C]	−2 IN. H^2O [−51 MM H^2O]	0 IN. H^2O [0 MM H^2O]	1 GPM [0.23 M^3/HR]	5 GPM [1.14 M^3/HR]
L054	130°F [54°C]	200°F [93°C]	−2 IN. H^2O [−51 MM H^2O]	0 IN. H^2O [0 MM H^2O]	-----	600 CFM [17.0 M^3/M]
L056	130°F [54°C]	200°F [93°C]	−2 IN. H^2O [−51 MM H^2O]	0 IN. H^2O [0 MM H^2O]	-----	200 CFM [5.7 M^3/M]
L077	130°F [54°C]	200°F [93°C]	−2 IN. H^2O [−51 MM H^2O]	0 IN. H^2O [0 MM H^2O]	-----	1000 CFM [28.3 M^3/M]
L078	130°F [54°C]	200°F [93°C]	−2 IN. H^2O [−51 MM H^2O]	0 IN. H^2O [0 MM H^2O]	-----	1000 CFM [28.3 M^3/M]
L085	130°F [54°C]	200°F [93°C]	−2 IN. H^2O [−51 MM H^2O]	0 IN. H^2O [0 MM H^2O]	0.5 GPM [0.11 M^3/HR]	2 GPM [0.45 M^3/HR]
L087	130°F [54°C]	200°F [93°C]	−2 IN. H^2O [−51 MM H^2O]	0 IN. H^2O [0 MM H^2O]	0.5 GPM [0.11 M^3/HR]	2 GPM [0.45 M^3/HR]
L088	130°F [54°C]	200°F [93°C]	−2 IN. H^2O [−51 MM H^2O]	0 IN. H^2O [0 MM H^2O]	-----	800 CFM [22.6 M^3/M]

REV.	FECHA	REVISIONES O MODIFICACIONES	DIBUJO	REVISO	APROBO
0	25/07/11	ISSUED FOR CONSTRUCTION, SEE NOTE 3	SAB	CB	TK

REF. FABRICANTE		
REF. FABRICANTE	FABRICANTE	O/C:

N° DE DOCUMENTO	DESCRIPCIÓN	REV.	FECHA
277A2415	GE - SYMBOLS, PIPING	H	23/02/01
AGM-02-0204-PLA-I-0046	DEVICE SUMMARY		

DOCUMENTOS DE REFERENCIA

DERWICK ASSOCIATES CORP. · ProEnergy SERVICES · CORPOELEC · La Electricidad de Caracas · GERENCIA FUNCIONAL DE INGENIERIA Y PROYECTOS · SENECA

AMPLIACIÓN DE LA CAPACIDAD DE GENERACIÓN Y TRANSPORTE DE ELECTRICIDAD EN LA ISLA DE MARGARITA

LUBE OIL P & ID
DUAL FUEL MOD. UNITS 298034 & 298035
(MLI 0416)

PLANO N°:	REV:		
PROYECTO N°: 409-2956-1			
CALCULO:	PROYECTO:	ESCALA: NONE	PLANO No: AGM-02-0204-PLA-P-0061
REVISADO: C. Brown	CALCULO:	FECHA: 25/07/11	
DIBUJO: S. Boerckel	REVISADO: J. Castillo	DISK. N°	
APROBADO: T. Koontz	DIBUJO:	ESC./PLOTEO:	
ARCHIVO:	APROBADO: M. Monticelli	ARCHIVO:	PAGINA: 1 DE: 4 — REV. 0

F_A1_11 – 841x594mm

N° PLANO: AGM-02-0204-PLA-P-0061 | 0

IMPORTANTE

ESTE PLANO FUE ELABORADO EN AUTOCAD V.2008
CUALQUIER MODIFICACION REALIZADA EN CAMPO DEBERA SER NOTIFICADO A LA UNIDAD RESPONSABLE.
QUEDA PROHIBIDO CORREGIR ESTE PLANO SIN AUTORIZACION DE ESTA UNIDAD.

ALL DIMENSIONS IN BRACKETS [ ] ARE MILLIMETER; EXPRESSED DIMENSIONS ARE INCHES

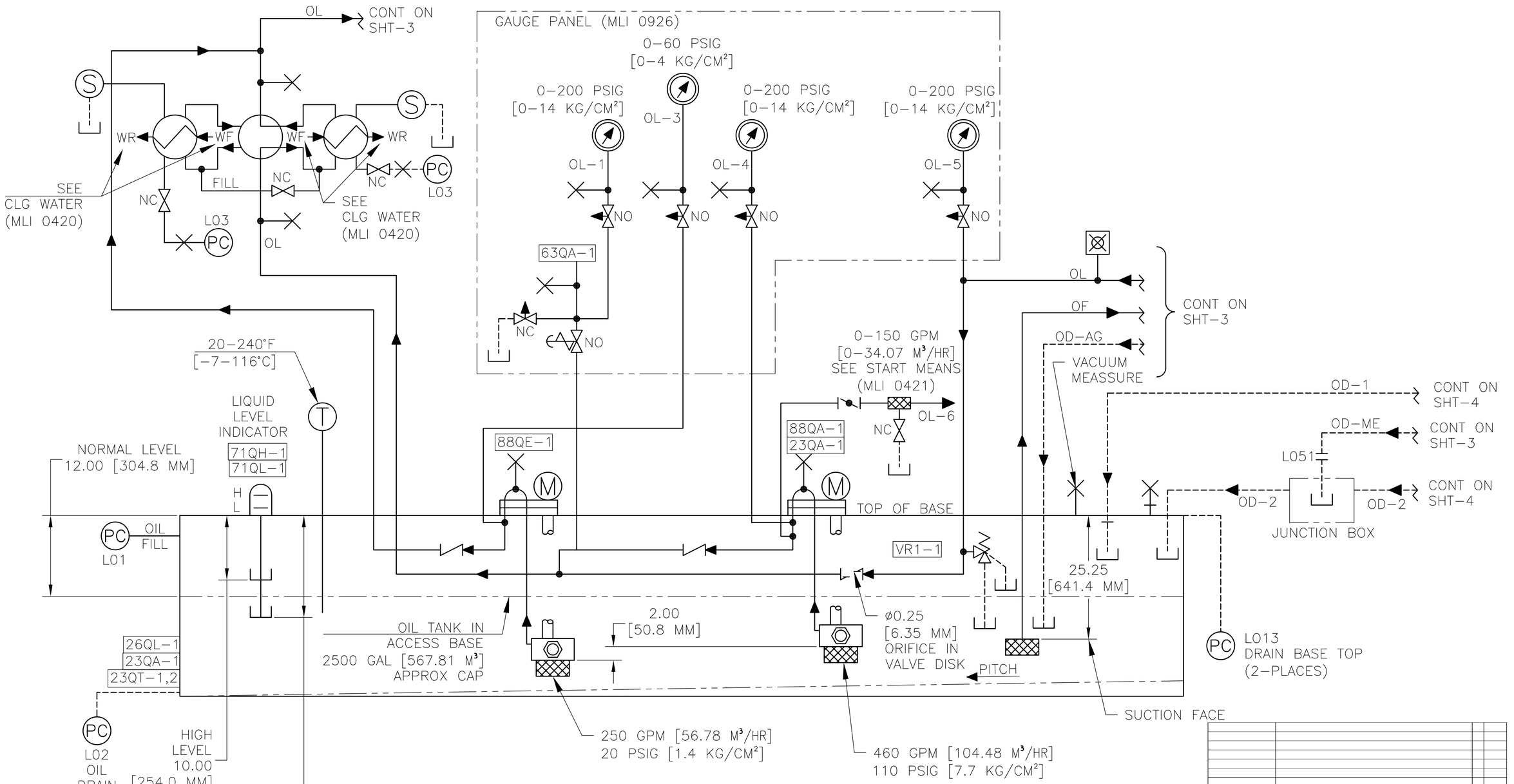

0	25/07/11	ISSUED FOR CONSTRUCTION, SEE NOTE 3 SHEET 1	SAB	CB	TK
REV.	FECHA	REVISIONES O MODIFICACIONES	DIBUJO	REVISO	APROBO

REF. FABRICANTE		
REF. FABRICANTE	FABRICANTE	O/C:

277A2415	GE - SYMBOLS, PIPING	H	23/02/01
AGM-02-0204-PLA-I-0046	DEVICE SUMMARY	0	10/03/11
N° DE DOCUMENTO	DESCRIPCIÓN	REV.	FECHA

DOCUMENTOS DE REFERENCIA

DERWICK | ProEnergy SERVICES | CORPOELEC | La Electricidad de Caracas | SENECA

AMPLIACIÓN DE LA CAPACIDAD DE GENERACIÓN Y TRANSPORTE DE ELECTRICIDAD EN LA ISLA DE MARGARITA

LUBE OIL P & ID
DUAL FUEL MOD. UNITS 298034 & 298035
(MLI 0416)

PLANO N°:	REV:		
PROYECTO N°: 409-2956-1			
CALCULO:	PROYECTO:	ESCALA: NONE	PLANO No: AGM-02-0204-PLA-P-0061
REVISADO: C. Brown	CALCULO:	FECHA: 25/07/11	
DIBUJO: S. Boerckel	REVISADO: J. Castillo	DISK. N°	
APROBADO: T. Koontz	DIBUJO:	ESC./PLOTEO:	
ARCHIVO:	APROBADO: M. Monticelli	ARCHIVO:	PAGINA: 2 DE: 4 — REV. 0

F_A1_11 - 841x594mm

N° PLANO: AGM-02-0204-PLA-P-0061 (0)

IMPORTANTE
ESTE PLANO FUE ELABORADO EN AUTOCAD V.2008
CUALQUIER MODIFICACION REALIZADA EN CAMPO DEBERA SER NOTIFICADO A LA UNIDAD RESPONSABLE.
QUEDA PROHIBIDO CORREGIR ESTE PLANO SIN AUTORIZACION DE ESTA UNIDAD.

ALL DIMENSIONS IN BRACKETS [ ] ARE MILLIMETER; EXPRESSED DIMENSIONS ARE INCHES

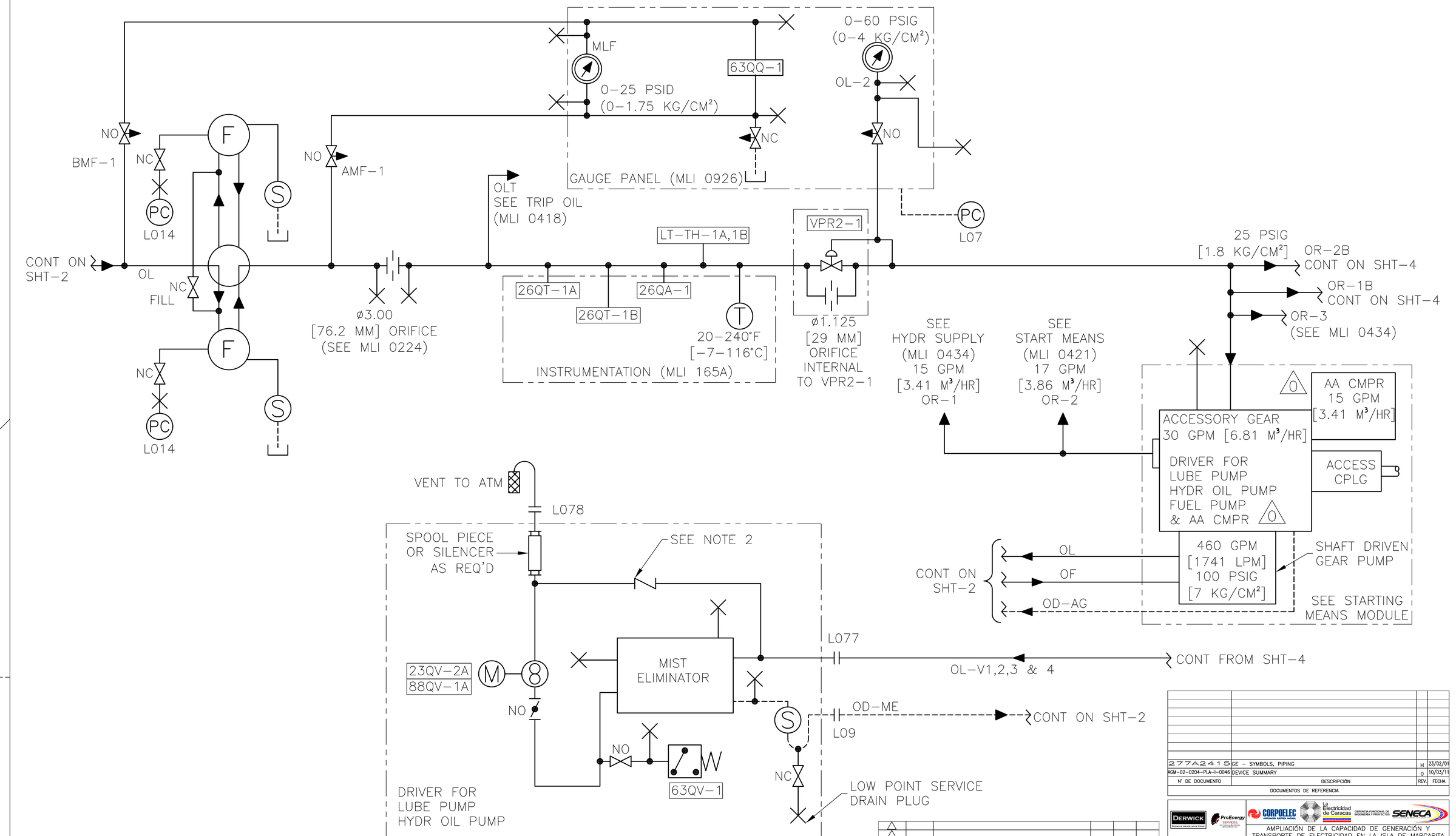

N° DE DOCUMENTO	DESCRIPCIÓN	REV.	FECHA
277A2415	GE – SYMBOLS, PIPING	H	23/02/01
AGM-02-0204-PLA-I-0046	DEVICE SUMMARY	0	10/03/11

DOCUMENTOS DE REFERENCIA

REV.	FECHA	REVISIONES O MODIFICACIONES	DIBUJO	REVISO	APROBO
0	25/07/11	ISSUED FOR CONSTRUCTION, SEE NOTE 3 SHEET 1	SAB	CB	TK

REF. FABRICANTE		
REF. FABRICANTE	FABRICANTE	O/C:

DERWICK · ProEnergy · CORPOELEC · La Electricidad de Caracas · SENECA

AMPLIACIÓN DE LA CAPACIDAD DE GENERACIÓN Y TRANSPORTE DE ELECTRICIDAD EN LA ISLA DE MARGARITA

PLANO N°: REV:

PROYECTO N°: 409–2956–1

LUBE OIL P & ID
DUAL FUEL MOD. UNITS 298034 & 298035
(MLI 0416)

CALCULO:	PROYECTO:	ESCALA: NONE	PLANO No: AGM-02-0204-PLA-P-0061
REVISADO: C. Brown	CALCULO:	FECHA: 25/07/11	
DIBUJO: S. Boerckel	REVISADO: J. Castillo	DISK. N°	
APROBADO: T. Koontz	DIBUJO:	ESC./PLOTEO:	
ARCHIVO:	APROBADO: M. Monticelli	ARCHIVO:	PAGINA: 3 DE: 4 — REV. 0

F_A1_11 – 841x594mm

N° PLANO: AGM-02-0204-PLA-P-0061 | 0

ALL DIMENSIONS IN BRACKETS [ ] ARE MILLIMETER, EXPRESSED DIMENSIONS ARE INCHES

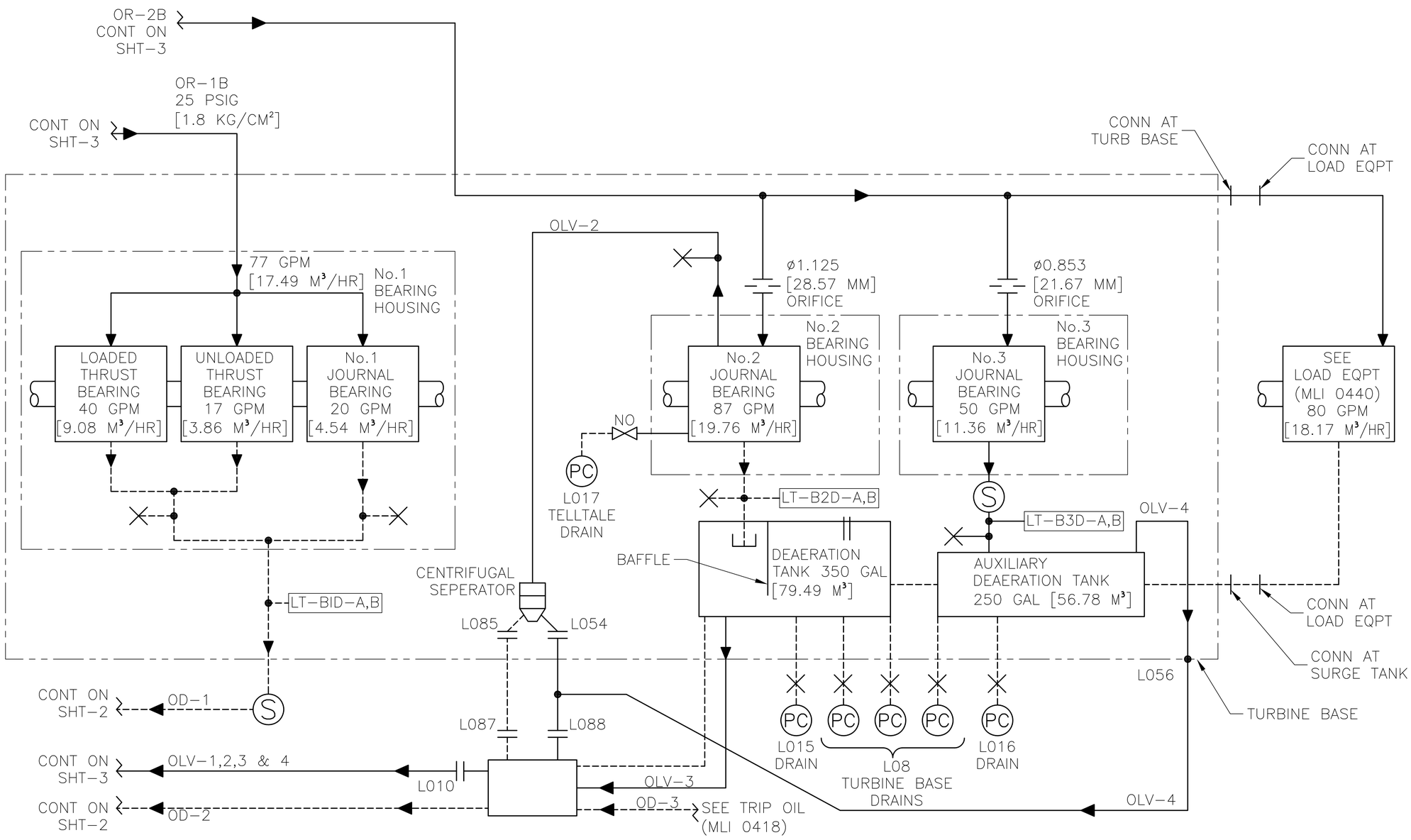

N° DE DOCUMENTO	DESCRIPCIÓN	REV.	FECHA
277A2415	GE - SYMBOLS, PIPING	H	23/02/01
AGM-02-0204-PLA-I-0046	DEVICE SUMMARY	0	10/03/11

DOCUMENTOS DE REFERENCIA

REV.	FECHA	REVISIONES O MODIFICACIONES	DIBUJO	REVISO	APROBO
0	25/07/11	ISSUED FOR CONSTRUCTION, SEE NOTE 3 SHEET 1	SAB	CB	TK

REF. FABRICANTE		
REF. FABRICANTE	FABRICANTE	O/C:

DERWICK Derwick Associates Corp. | ProEnergy Services | CORPOELEC Corporación Eléctrica Nacional | La Electricidad de Caracas | SENECA

AMPLIACIÓN DE LA CAPACIDAD DE GENERACIÓN Y TRANSPORTE DE ELECTRICIDAD EN LA ISLA DE MARGARITA

LUBE OIL P & ID
DUAL FUEL MOD. UNITS 298034 & 298035
(MLI 0416)

PLANO N°:	REV:		
PROYECTO N°: 409-2956-1			
CALCULO:	PROYECTO:	ESCALA: NONE	PLANO No: AGM-02-0204-PLA-P-0061
REVISADO: C. Brown	CALCULO:	FECHA: 25/07/11	
DIBUJO: S. Boerckel	REVISADO: J. Castillo	DISK. N°	
APROBADO: T. Koontz	DIBUJO:	ESC./PLOTEO:	
ARCHIVO:	APROBADO: M. Monticelli	ARCHIVO:	PAGINA: 4 DE: 4 — REV. 0

F_A1_11 – 841x594mm